CALL NOW 800-985-6929 http://www.automatedpt.com Email:charles@automatedpt.com

TWMC

EQ7 AC Drive Series

QUICK SETTING GUIDE

Available Documentation:

1. EQ7 Quick Setting Guide - Print Copy
2. EQ7 Instruction Manual - Print Copy
3. EQ7 User Manual - PDF - Visit our website at www.tecowestinghouse.com

Variable Torque 0.5 - 1000HP

Constant Torque 0.5 - 900 HP

- Read all operating instructions before installing, connecting (wiring), operating, servicing, or inspecting the inverter.
- Ensure that the quick setting guide is made available to the end user of the inverter.
- This guide is subject to change without prior notice.

DOCUMENT - TWMC-EQ7QSG
REV 11/02/12

CALL NOW 800-985-6929 http://www.automatedpt.com Email:charles@automatedpt.com

Preface

The EQ7 product is designed to drive a three-phase induction motor. Read through this Quick Setting Guide document to become familiar with proper handling and correct use. Improper handling might result in incorrect operation, shorter life cycle, or failure of this product as well as the motor.

Have this Quick Setting Guide delivered to the end user of this product. Keep this Quick Setting Guide in a safe place accessible by only people in connection with the VFD until this product is no longer being used.

Read this Quick Setting Guide in conjunction with EQ7 Instruction Manual and User Manual.

All EQ7 documentation is subject to change without notice. Be sure to obtain the latest editions for use or visit our website at www.tecowestinghouse.com.

Available Documentation:

1. EQ7 Quick Setting Guide
2. EQ7 Instruction Manual
3. EQ7 User Manual

Safety Precautions

Read this Quick Setting Guide in conjunction with EQ7 Instruction Manual thoroughly before proceeding with installation, connections (wiring), operation, or maintenance and inspection. Ensure you have sound knowledge of the device and familiarize yourself with all safety information and precautions before proceeding to operate the inverter. Read EQ7 User Manual for detailed description on parameters.

IMPORTANT	**For Advanced Installation, Wiring and Programming of the EQ7 drive refer to the EQ7 Instruction Manual and User Manual.**

Safety precautions are classified into the following two categories in this manual.

⚠WARNING	**Failure to heed the information indicated by this symbol may lead to dangerous conditions, possibly resulting in death or serious bodily injuries.**
⚠CAUTION	**Failure to heed the information indicated by this symbol may lead to dangerous conditions, possibly resulting in minor or light bodily injuries and/or substantial property damage.**

Failure to ignore the information contained under the CAUTION title can also result in serious consequences. These safety precautions are of utmost importance and must be observed at all times.

IMPORTANT	For Advanced Installation, Wiring and Programming of the EQ7 drive refer to the EQ7 Instruction Manual and User Manual.

Table of Contents

1. Drive Models Constant Torque (CT) / Variable Torque (VT) HP Ratings 3

2. Mounting and Wiring 4

2.1 Mounting Notes 4

2.2 Wiring 5

3. Input Power and Motor Connection 6

4. LED Monitor, LCD Monitor and Keys 8

5. Check Motor Rotation and Direction 11

6. User Wiring Diagram 12

7. Speed Reference Command Configuration 14

7.1 Reference from the Keypad 15

7.2 Reference from an Analog Signal (0-10V / 0-20mA / 4-20mA) / Speed Pot 16

7.3 Reference from Serial Communication – RS485 17

8. Operation Method Configuration (Run / Stop) 19

8.1 Run / Stop from the Keypad 19

8.2 Run / Stop from External Switch / Contact or Pushbutton 20

8.3 Run / Stop from Serial Communication – RS485 22

9. Motor and Application Specific Settings 24

9.1 Set Motor Nameplate Data 24

Appendix: EQ7 Parameter Overview (Fundamental Functions) 25

1. Drive Models Constant Torque (CT) / Variable Torque (VT) HP Ratings

Voltage	EQ7 DRIVE	Variable Torque HP	Constant Torque HP	Frame Enclosure
230V	EQ7-20P5-C	0.5	0.5	Plastic
	EQ7-2001-C	1	1	Plastic
	EQ7-2002-C	2	2	Plastic
	EQ7-2003-C	3	3	Plastic
	EQ7-2005-C	5	5	Plastic
	EQ7-2007-C	7.5	7.5	Plastic
	EQ7-2010-C	10	7.5	Plastic
	EQ7-2015-C	15	10	Plastic
	EQ7-2020-C	20	15	Plastic
	EQ7-2025-C	25	20	Plastic
	EQ7-2030-C	30	25	Plastic
	EQ7-2040-C	40	30	Plastic
	EQ7-2050-C	50	40	Sheet Metal
	EQ7-2060-C	60	50	Sheet Metal
	EQ7-2075-C	75	60	Sheet Metal
	EQ7-2100-C	100	75	Sheet Metal
	EQ7-2125-C	125	100	Sheet Metal
	EQ7-2150-C	150	125	Sheet Metal
460V	EQ7-40P5-C	0.5	0.5	Plastic
	EQ7-4001-C	1	1	Plastic
	EQ7-4002-C	2	2	Plastic
	EQ7-4003-C	3	3	Plastic
	EQ7-4005-C	5	5	Plastic
	EQ7-4007-C	7.5	7.5	Plastic
	EQ7-4010-C	10	7.5	Plastic
	EQ7-4015-C	15	10	Plastic
	EQ7-4020-C	20	15	Plastic
	EQ7-4025-C	25	20	Plastic
	EQ7-4030-C	30	25	Plastic
	EQ7-4040-C	40	30	Plastic
	EQ7-4050-C	50	40	Sheet Metal
	EQ7-4060-C	60	50	Sheet Metal
	EQ7-4075-C	75	60	Sheet Metal
	EQ7-4100-C	100	75	Sheet Metal
	EQ7-4125-C	125	100	Sheet Metal
	EQ7-4150-C	150	125/150*	Sheet Metal
	EQ7-4200-C	200	200*	Sheet Metal
	EQ7-4250-C	250	250*	Sheet Metal
	EQ7-4300-C	300	300*	Sheet Metal
	EQ7-4350-C	350	350*	Sheet Metal
	EQ7-4450-C	400/450	350	Sheet Metal
	EQ7-4500-C	500	400/450*	Sheet Metal
	EQ7-4600-C	600	500*	Sheet Metal
	EQ7-4700-C	700	600*	Sheet Metal
	EQ7-4800-C	800	700*	Sheet Metal
	EQ7-4900-C	900	800	Sheet Metal
	EQ7-41000-C	1000	900	Sheet Metal

This table shows the Variable Torque and Constant Torque ratings for all EQ7 drive models.

* The HP ratings marked with (*) are suitable for constant torque V/F Control. Refer to EQ7 Instruction Manual chapter 11 for constant torque vector control HP ratings.

2. Mounting and Wiring

2.1 Mounting Notes

Mounting the EQ7 in a control cabinet

1) Remove all base fixing screws and case fixing screws from the top of the inverter.
2) Move the top mounting base to the center of the inverter and secure it to the case fixing screw holes with the base fixing screws. (After changing the position of the top mounting base, some screws may be left unused.)
3) Remove all base fixing screws from the bottom of the inverter, move the bottom mounting base to the center of the inverter, and secure it with the base fixing screws, just as in step 2). (Inverters of 450 HP or below have no case fixing screws on the bottom.)

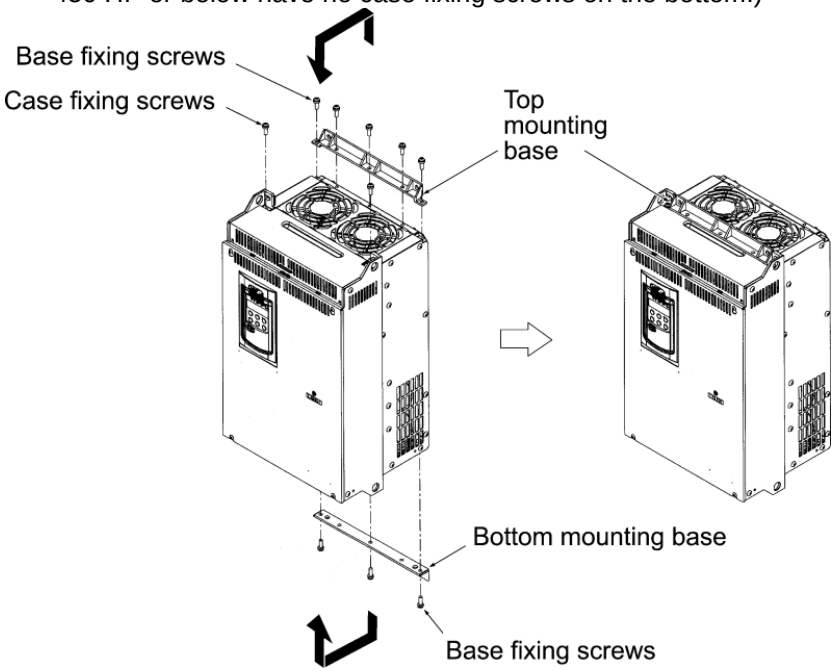

Figure 2.1: Changing the Positions of the Top and Bottom Mounting Bases

⚠CAUTION
When changing the positions of the top and bottom mounting bases, use only the specified screws. Otherwise, a fire or accident could occur.

(4) Mounting notes
Refer to the EQ7 Instruction Manual Chapter 2 for detailed mounting Information.

The EQ7-2007-C / EQ7-4007-C through EQ7-2040-C / EQ7-4040-C should be mounted with four screws or bolts using screw holes A or B shown below. Note that, at each of the top and bottom of the inverter, the two screws or bolts should be located in a bilaterally symmetrical position.

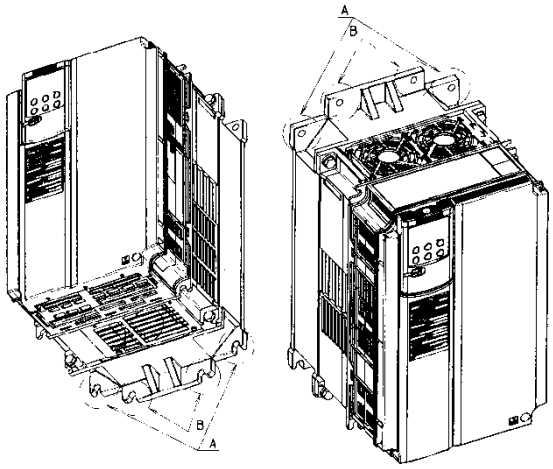

2.2 Wiring

Follow the procedure below. (In the following description, the inverter has already been installed.)
Removing and mounting the front cover and the wiring guide
(1) For inverters of 40 HP or below
① First loosen the front cover fixing screw, slide the cover downward holding both sides, tilt it forward, and then pull it upward, as shown below.
② While pressing the wiring guide upward, pull it out and forward.
③ After carrying out wiring (see Section 2.3 of the EQ7 Instruction Manual), put the wiring guide and the front cover back into place in the reverse order of removal.

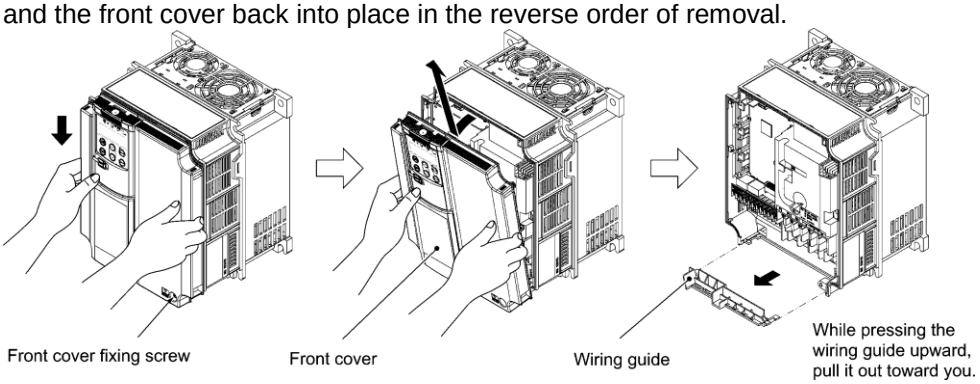

Figure 2.2: Removing the Front Cover and the Wiring Guide (e.g EQ7-4020-C)

(2) For inverters of 50 to 1000 HP
① Loosen the four front cover fixing screws, hold the cover with both hands, slide it upward slightly, and pull it forward, as shown below.
② After carrying out wiring (see Section 2.3 of the EQ7 Instruction Manual), align the screw holes provided in the front cover with the screws on the inverter case, and then put the front cover back into place in the reverse order of removal.

Tip To expose the control printed circuit board (control PCB), open the keypad enclosure.

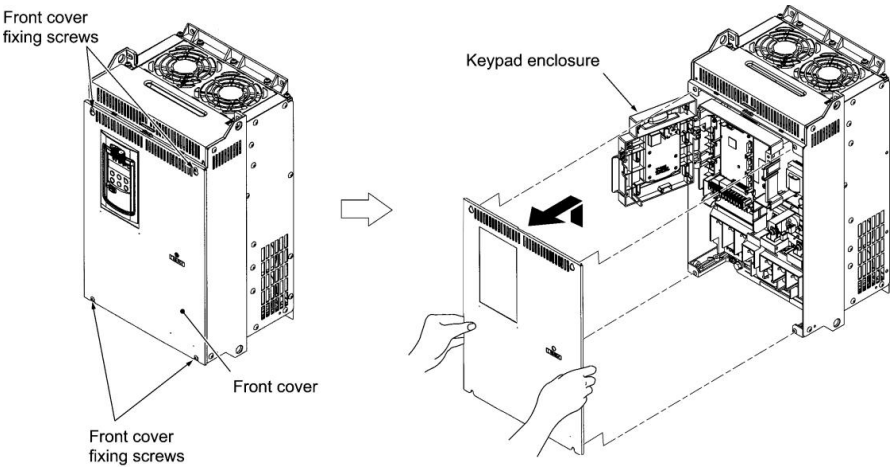

Tightening torque: 15.9 lb-in (1.8 N•m) (M4)
31.0 lb-in (3.5 N•m) (M5)

Figure 2.3: Removing the Front Cover (e.g. EQ7-4050-C)

3. Input Power and Motor Connection

Checking prior to applying power

Fig.3.1 below shows the electrical connections for the input power and motor terminals for various EQ7 DRIVE models. Verify the input power and motor terminals of the model you are installing**. WITH POWER OFF,** make the appropriate connections.

Make sure to follow good wiring practices and all applicable codes. Ensure that the equipment is grounded properly as shown.

DANGER, LETHAL VOLTAGES ARE PRESENT- Before applying power to the EQ7 drive, ensure that the terminal cover is fastened and all wiring connections are secure. After the power has been turned OFF, wait at least ten minutes until the charge indicator extinguishes completely before touching any wiring, circuit boards or components.

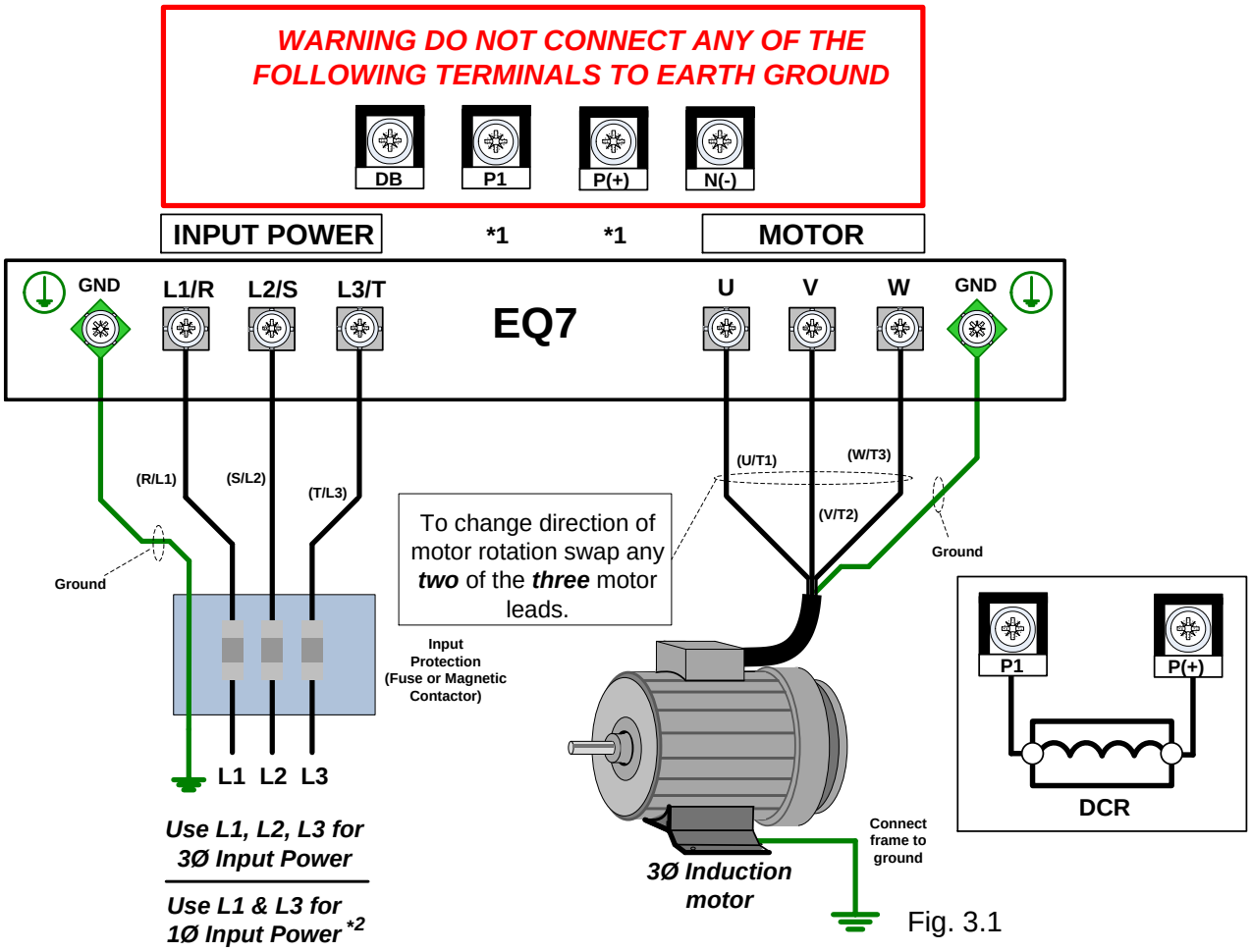

Fig. 3.1

*1. Refer to page 12 & 13 for connecting a DC reactor from the terminals P1 and P(+).
*2. Make sure the drive is properly sized for single phase input (consult factory).
(Refer to Table 2.6 Recommended Wire Sizes in the EQ7 Instruction Manual).

⚠WARNING

- Never connect power supply wires to the EQ7 drive output terminals U, V, and W. Doing so and turning the power ON damages the inverter.
- Be sure to connect the grounding wires of the EQ7 drive and the motor to the ground electrodes. Otherwise, an electric shock could occur.

Check the following before powering on the EQ7 drive.

1) Check that the wiring is correct. In particular check the wiring to the EQ7 drive input terminals L1/R, L2/S and L3/T and output terminals U, V, and W. Also check that the grounding wires are connected to the grounding terminals (⏚G) correctly. See Figure 3.1.

2) Check the control circuit terminals and main circuit terminals for short circuits or ground faults.

3) Check for loose terminals, connectors and screws.

4) Check that the motor is separated from mechanical equipment.

5) Make sure that all switches of devices connected to the inverter are turned OFF. Powering on the inverter with any of those switches being ON may cause an unexpected motor operation.

6) Check that safety measures are taken against runaway of the equipment. Also ensure that all safety guards are in place to prevent human injury.

4. LED Monitor, LCD Monitor and Keys

The keypad allows you to start and stop the motor, view various data including maintenance information and alarm information, configure function codes, monitor I/O signal status, copy data, and calculate the load factor.

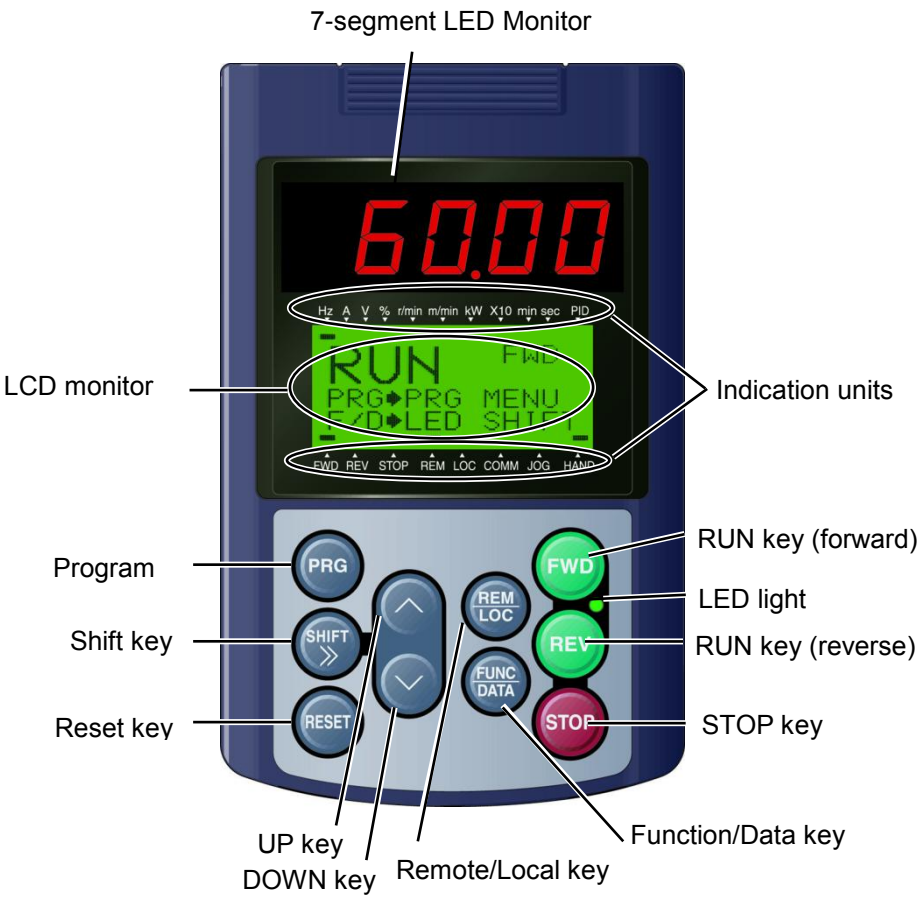

Table 4.1: Overview of Keypad Functions

Item	Monitor	Functions
Monitors	60.00	Five-digit, 7-segment LED monitor which displays the following according to the operation modes: ■ In Run mode: Running status information (e.g., output frequency, current, and voltage). ■ In Programming mode: Same as above. ■ In Alarm mode: Alarm code, which identifies the alarm when the protective function is activated.
	RUN FWD PRG=>PRG MENU F/D=>LED SHIFT	LCD monitor which displays the following according to the operation modes: ■ In Run mode: Running status information. ■ In Programming mode: Menus, function codes and their settings. ■ In Alarm mode: Alarm code, which identifies the alarm when the protective function is activated.
	Indication Units	In Run mode, these show the unit for the number displayed on the 7-segment LED monitor and the running status information on the LCD monitor. For details, see the next page.

Item	Keys	Functions
Programming keys	PRG	Switches the operation modes of the inverter.
	SHIFT	Shifts the cursor to the right for entry of a numerical value.
	RESET	Pressing this key after removing the cause of an alarm switches the inverter to Run mode. This key is used to reset settings or screen transition.
	∧ and ∨	UP and DOWN keys, which are used to select the setting items or change the function code data.
	FUNC/DATA	Function/Data key, which switches the operation mode as follows: ■ In Run mode: Pressing this key switches the information to be displayed concerning the status of the inverter (output frequency (Hz), output current (A), output voltage (V), etc.). ■ In Programming mode: Pressing this key displays the function code and establishes the newly entered data. ■ In Alarm mode: Pressing this key displays the details of the problem indicated by the alarm code that has come up on the LED monitor.
Operation keys	FWD	Starts running the motor in the forward rotation.
	REV	Starts running the motor in the reverse rotation.
	STOP	Stops the motor.
	REM/LOC	Holding down this key for more than 1 second toggles between local and remote modes.
LED lamp	FWD LED REV	Lights while a run command is supplied to the inverter.

Details of Indicator Indexes

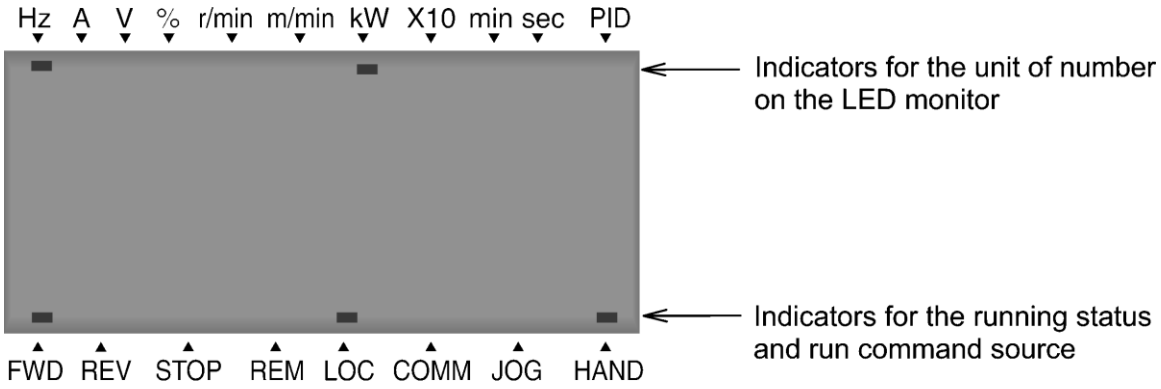

Type	Item	Description (information, condition, and status)
Unit of number on LED monitor	Hz	Output frequency and reference frequency
	A	Output current
	V	Output voltage
	%	Calculated torque, load factor, and speed
	r/min	Preset and actual motor speeds and preset and actual load shaft speeds
	m/min	Preset and actual line speeds
	kW	Input power and motor output
	X10	Data exceeding 99,999
	min	Preset and actual constant feeding rate times
	sec	Timer
	PID	PID process value
Running status	FWD	Running in the forward rotation
	REV	Running in the reverse rotation
	STOP	No output frequency
Run command source	REM	Remote mode
	LOC	Local mode
	COMM	Via communications link (RS-485 (standard, optional), fieldbus option)
	JOG	Jogging mode
	HAND	Via keypad (This item lights also in local mode.)

5. Check Motor Rotation and Direction

This test is to be performed solely from the EQ7 drive keypad. Apply power to the EQ7 drive after all the electrical connections have been made and protective covers have been re-attached. At this point, **DO NOT RUN THE MOTOR**, the keypad should display as shown below in Fig. 5.1 and the speed reference ***0.00*** should be blinking. ***Important: Motor rotation and direction only applies to standard AC motors with a base frequency of 60Hz.***

Fig 5.1: Keypad (Stopped)

Fig 5.2: Keypad (Running)

Next use the ⌃ and ⌄ keys to set a speed reference of 10.00 Hz, then press the FWD key, see Fig 5.2.

The motor should now be operating at low speed running in forward (clockwise) direction.

Next press STOP key to stop the motor.

If the motor rotation is incorrect, power down the EQ7 drive.

After the power has been turned OFF, wait <u>at</u> <u>least</u> <u>ten minutes</u> until the charge indicator extinguishes <u>completely</u> before touching any wiring, circuit boards or components.

Using Safety precautions, and referring to Fig.3.1, exchange any two of the three output leads to the motor (U/T1, V/T2 and W/T3). After the wiring change, repeat Step 5 and recheck motor direction.

6. User Wiring Diagram

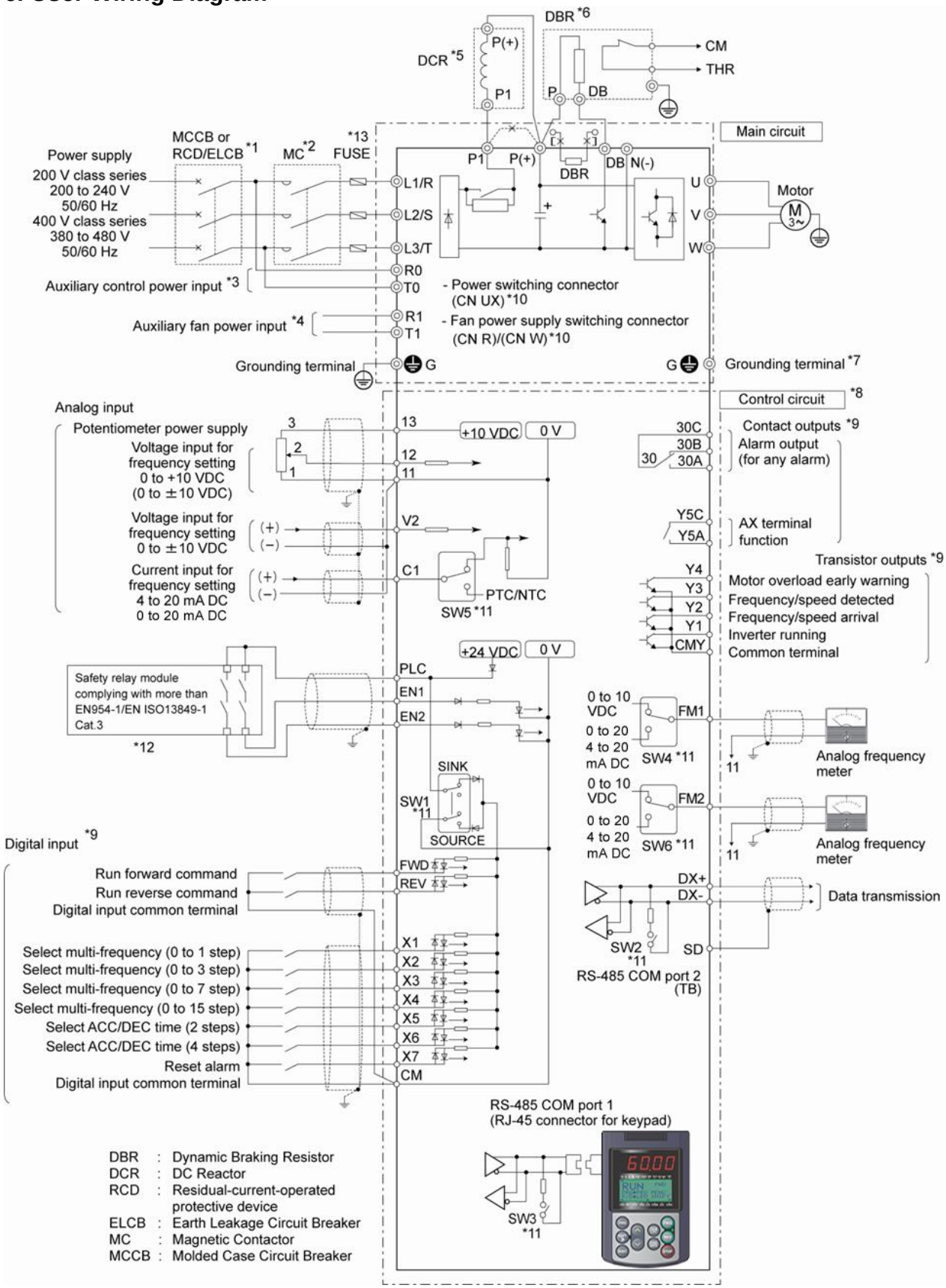

*1 Install a recommended molded case circuit breaker (MCCB) or residual-current-operated protective device

(RCD)/earth leakage circuit breaker (ELCB) (with overcurrent protection function) in the primary circuit of the inverter to protect wiring. Ensure that the circuit breaker capacity is equivalent to or lower than the recommended capacity.

*2 Install a magnetic contactor (MC) for each inverter to separate the inverter from the power supply, apart from the MCCB or RCD/ELCB, when necessary.
Connect a surge absorber in parallel when installing a coil such as the MC or solenoid near the inverter.

*3 The R0 and T0 terminals are provided for inverters with a capacity of 2HP or above.
To retain an alarm output signal ***ALM*** issued on inverter's programmable output terminals by the protective function or to keep the keypad alive even if the main power has shut down, connect these terminals to the power supply lines. Without power supply to these terminals, the inverter can run.

*4 Normally no need to be connected. Use these terminals when the inverter is equipped with a high power-factor, regenerative PWM converter (RHC series).

*5 When connecting an optional DC reactor (DCR), remove the jumper bar from the terminals P1 and P(+).
EQ7-2100-C / EQ7-4100-C and larger HP models require a DCR (packed with the EQ7) to be connected.
Use a DCR when the capacity of the power supply transformer exceeds 500 kVA and is 10 times or more the inverter rated capacity, or when there are thyristor-driven loads in the same power supply line.

*6 EQ7-2015-C/EQ7-4015-C and smaller HP models have a built-in braking resistor (DBR) between the terminals P(+) and DB.
When connecting an external braking resistor (DBR), be sure to disconnect the built-in one.

*7 A grounding terminal for a motor. Use this terminal if needed.

*8 For control signal wires, use twisted or shielded-twisted wires. When using shielded-twisted wires, connect the shield of them to the common terminals of the control circuit. To prevent malfunction due to noise, keep the control circuit wiring away from the main circuit wiring as far as possible (recommended: 10 cm/3.9 inches or more). Never install them in the same wire duct. When crossing the control circuit wiring with the main circuit wiring, set them at right angles.

*9 The connection diagram shows factory default functions assigned to digital input terminals [X1] to [X7], [FWD] and [REV], transistor output terminals [Y1] to [Y4], and relay contact output terminals [Y5A/C] and [30A/B/C].

*10 Switching connectors in the main circuits. For details, refer to "Instruction manual section 2.3.4 ⑥ Switching connectors" later in this section.

*11 Slide switches on the control printed circuit board (control PCB). Use these switches to customize the inverter operations. For details, refer to Section 2.3.6 of the instruction manual "Setting up the slide switches."

*12 When the Enable input function is not to be used, keep terminals [EN1]-[PLC] and terminals [EN2]-[PLC] short-circuited using jumper wires. For opening and closing the hardware circuit between terminals [EN1] and [PLC] and between [EN2] and [PLC], use safety components such as safety relays and safety switches that comply with EN954-1 or EN ISO13849-1 Category 3 or higher.

*13 To bring the inverter into compliance with the European Standard, Low Voltage Directive EN61800-5-1, be sure to insert the specified fuse in the primary circuit of the inverter.

7. Speed Reference Command Configuration

The EQ7 Drive offers users several choices to set the speed reference source. The most commonly used methods are described in the next sections.

Frequency reference command is selected with parameter F01.

F01 **Frequency Command 1**

This function sets the frequency command source.

Setting Range: 0 to 12

To set parameter F01:

- Press **PRG** key, next select **QUICK SET or DATA SET** with **UP/DOWN** ⌃ and ⌄ keys and press the **FUNC/DATA** key.
- In the parameter list move cursor to F01 with **UP/DOWN** keys and press **FUNC/DATA** key to select.

Data for F01	Function
0	Enable ⌃ / ⌄ keys on the keypad.
1	Enable the voltage input to terminal [12] (0 to ±10 VDC, maximum frequency obtained at ±10 VDC).
2	Enable the current input to terminal [C1] (0 to +20mA, +4 to +20 mA DC, maximum frequency obtained at +20 mA DC). (SW5 on the control PCB should be turned to the C1 side (factory default).)
3	Enable the sum of voltage (0 to ±10 VDC) and current inputs (+4 to +20 mA DC) given to terminals [12] and [C1], respectively. See the two items listed above for the setting range and the value required for maximum frequencies. (SW5 on the control PCB should be turned to the C1 side (factory default).) Note: If the sum exceeds the maximum frequency (F03), the maximum frequency will apply.
5	Enable the voltage input to terminal [V2] (-10 to ±10 VDC, maximum frequency obtained at ±10 VDC).
7	Enable ***UP*** and ***DOWN*** commands assigned to the digital input terminals. The ***UP*** command (any of E01 to E07 = 17) and ***DOWN*** command (any of E01 to E07 = 18) should be assigned to any of digital input terminals [X1] to [X7]. For details, refer to the descriptions of E01 through E07.
8	Enable ⌃ / ⌄ keys on the keypad (balanceless-bumpless switching available).
11	Enable a digital input interface card (option). (For details, refer to the Digital Input Interface Card Instruction Manual.)
12	Enable the "Pulse train input" ***PIN*** command assigned to digital input terminal [X7] (E07 = 48), or a PG interface card (option).

7.1 Reference from Keypad (Default Setting, F01 = 0)

Speed reference from digital operator (Keypad) is the default setting. Use the ⌃ and ⌄ keys to change the speed reference.

7.2 Reference from External Analog Signal (0-10V / 0-20mA / 4-20mA)

Analog Reference: 0 – 10 V (Setting F01 = 1)

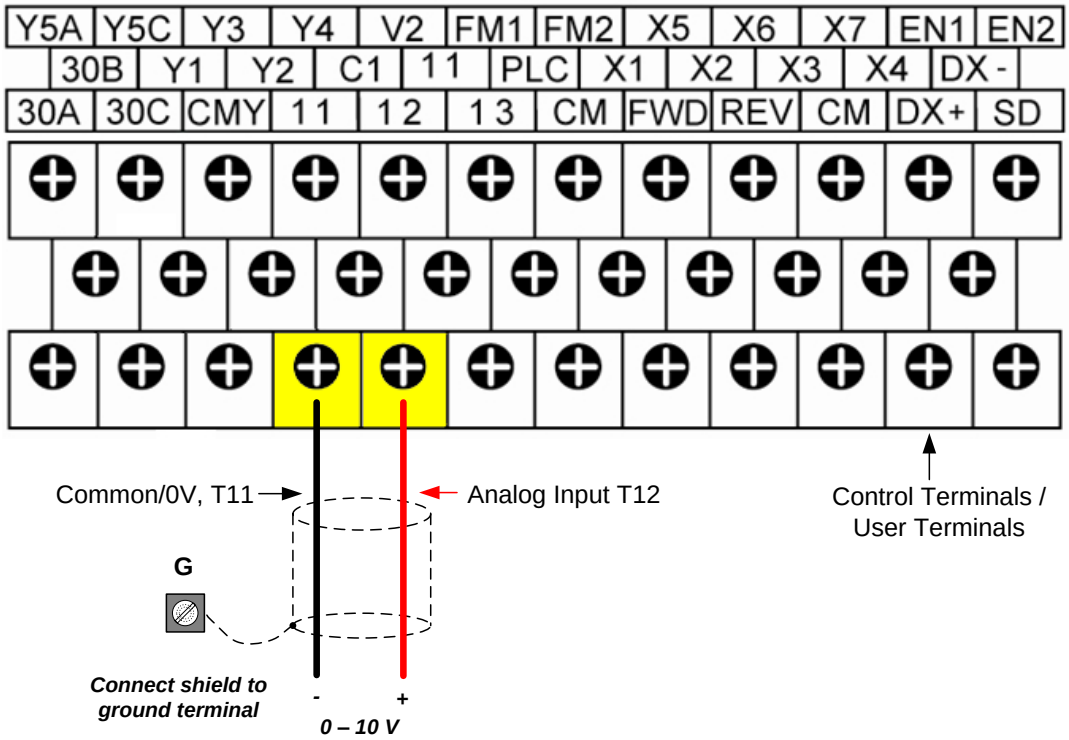

Analog Reference: Potentiometer / Speed Pot (Setting F01 = 1):

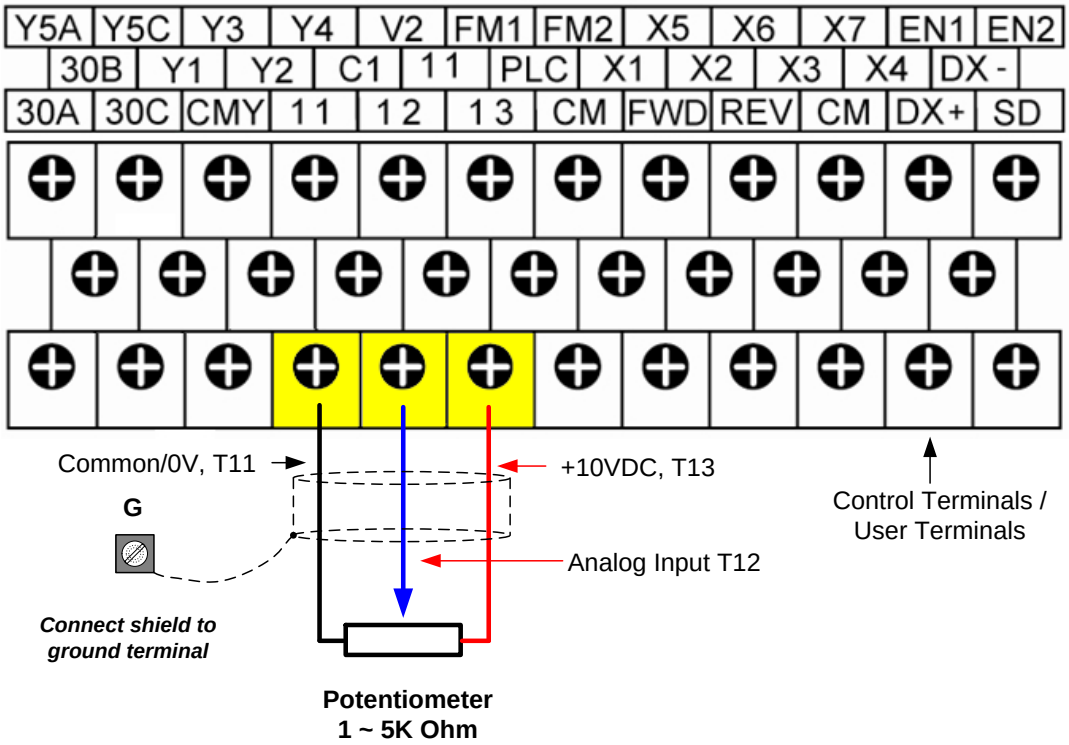

Analog Reference: 0 – 20mA / 4 – 20mA (Setting F01 = 2)

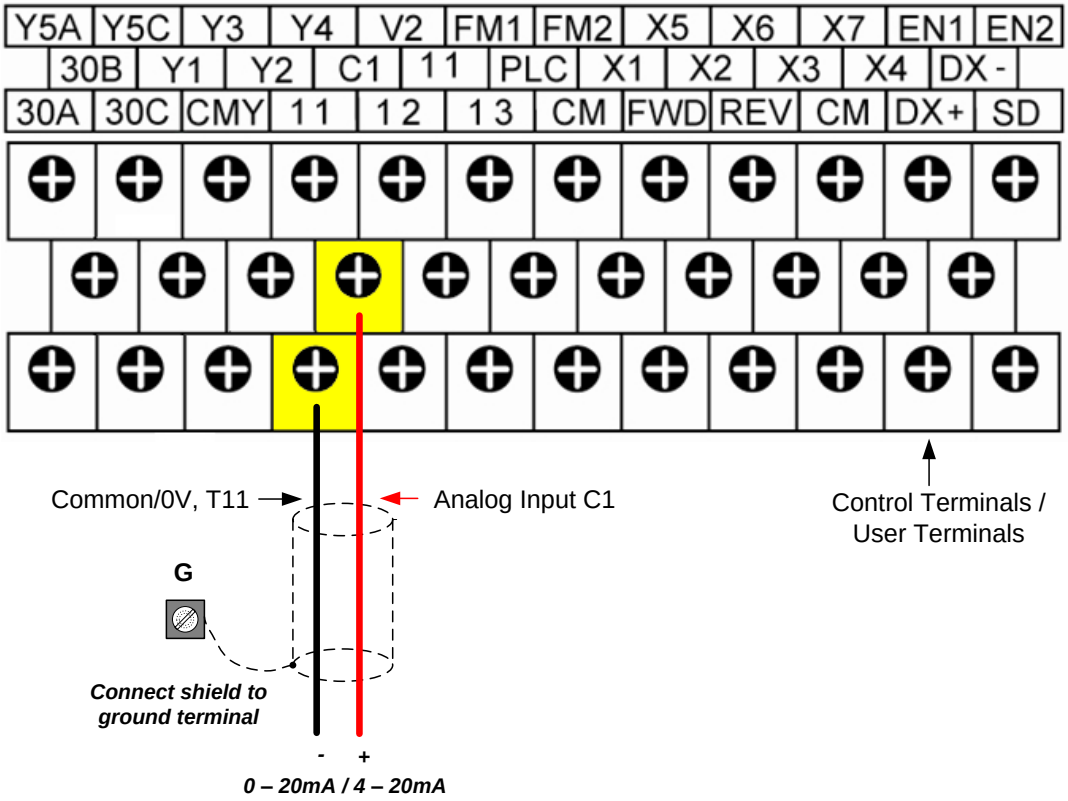

Note: When using a 0 – 20mA signal set parameter C40 to 1.

7.3 Reference from Serial Communication RS485 (H30 = 6 or 8)

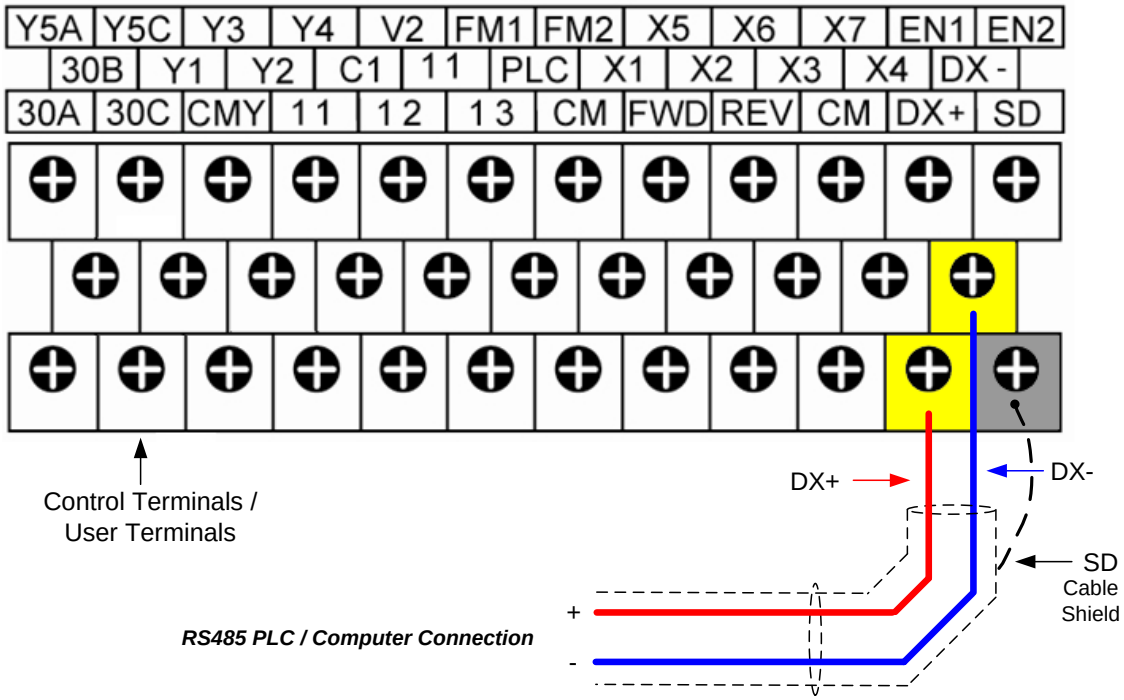

To set the speed reference for the EQ7 drive via serial communication parameter H30 has be set to either a “4” for frequency command via serial communication only or to “8” for Run Command and Frequency Reference (Frequency Command).

Default Communication Setting is: Address “1”, 9600 Bits/sec, 1 Start Bit, 1 Stop Bit, and No Parity

H30 **Communications Link Function**

This function sets the communication link function to select run/stop and frequency reference control.

Setting range: 0 to 8

To set parameter H30:

- Press **PRG** key, next select **QUICK SET or DATA SET** with **UP/DOWN** and keys and press the **FUNC/DATA** key.
- In the parameter list move cursor to H30 with **UP/DOWN** keys and press **FUNC/DATA** key to select.

The serial communication link function uses RS485 Modbus RTU protocol and allows for:
1) Monitoring (data monitoring, function data check).
2) Frequency setting.
3) Operation command (FWD, REV, and other commands for digital input).
4) Write function data.

H30 **Communications Link Function**

Set value	Frequency command	Run command (Run/Stop)
0	F01 / C30	F02
1	Enabled / RS485 (Port 1)	F02
2	F01 / C30	Enabled / RS485 (Port 1)
3	Enabled / RS485 (Port 1)	Enabled / RS485 (Port 1)
4	Enabled / RS485 (Port 2)	F02
5	Enabled / RS485 (Port 2)	Enabled / RS485 (Port 1)
6	F01 / C30	Enabled / RS485 (Port 2)
7	Enabled / RS485 (Port 1)	Enabled / RS485 (Port 2)
8	Enabled / RS485 (Port 2)	Enabled / RS485 (Port 2)

See Parameter y11 – y20 forRS485 communication setup.

Frequency Reference Command Register

EQ7 Drive Frequency Reference Register: 1797 (Decimal) - Bit 0 – Bit 15: 0.00 ~ 120.00 Hz

Examples:

Frequency Reference Command: 10.00 Hz (EQ7 Drive Address: 01)

Command String (hexadecimal): 01 06 07 05 03 E8 98 01

To set the frequency reference to 10.00, a value of ‘1000’ (03E8h) has to be send to the EQ7 Drive

Frequency Reference Command: 30.00 Hz (EQ7 Drive Address: 01)

Command String (hexadecimal): 01 06 07 05 0B B8 9F FD

To set the frequency reference to 30.00, a value of ‘3000’ (0BB8h) has to be send to the EQ7 Drive

Frequency Reference Command: 60.00 Hz (EQ7 Drive Address: 01)

Command String (hexadecimal): 01 06 07 05 17 70 96 AB

To set the frequency reference to 60.00, a value of ‘6000’ (1770h) has to be send to the EQ7 Drive

Note: The last 2 bytes of the command strings consist of a CRC16 checksum, please refer to the Refer to the EQ7 Communications Manual for additional information.

8. Operation Method Configuration (Run / Stop)

The EQ7 Drive offers users several choices to run and stop the drive from different sources. The most commonly used methods are described in the next sections.

F02 | **Operation Method**

This function sets the operation method (Run/Stop) source.

Setting Range: 0 – 3

To set parameter F02:

- Press **PRG** key, next select **QUICK SET or DATA SET** with **UP/DOWN** and keys and press the **FUNC/DATA** key.
- In the parameter list move cursor to F02 with **UP/DOWN** keys and press **FUNC/DATA** key to select.

Data for F02	Run Command	Description
0	Keypad	Enables the FWD, REV, and STOP keys to run the motor in the forward and reverse directions, and stop the motor.
1	Terminal command ***FWD*** or ***REV***	Enables input terminal commands ***FWD*** and ***REV*** to run the motor in the forward and reverse directions, and stop the motor.
2	Keypad (Forward rotation)	Enables the FWD and STOP keys to run the motor in the forward direction and stop it. Running the motor in the reverse direction is not possible.
3	Keypad (Reverse rotation)	Enables the REV and STOP keys to run the motor in the reverse direction and stop it. Running the motor in the forward direction is not possible.

8.1 Run/Stop from Keypad (Default Setting, F02 = 0)

Run from digital operator (Keypad) is the default setting.

Use the FWD key to run the drive in forward direction and the REV key to run the EQ7 drive in reverse direction. (Note: to disable reverse direction set parameter H08 to 1)

Press STOP key to stop the EQ7 drive. (Note: Stop method can be set with parameter H07, default is ***ramp to stop)***.

8.2 Run/Stop from External Switch / Contact or Pushbutton (F02 = 1)

Use an external contact or switch to Run and Stop the EQ7 drive.

Permanent Switch / Contact

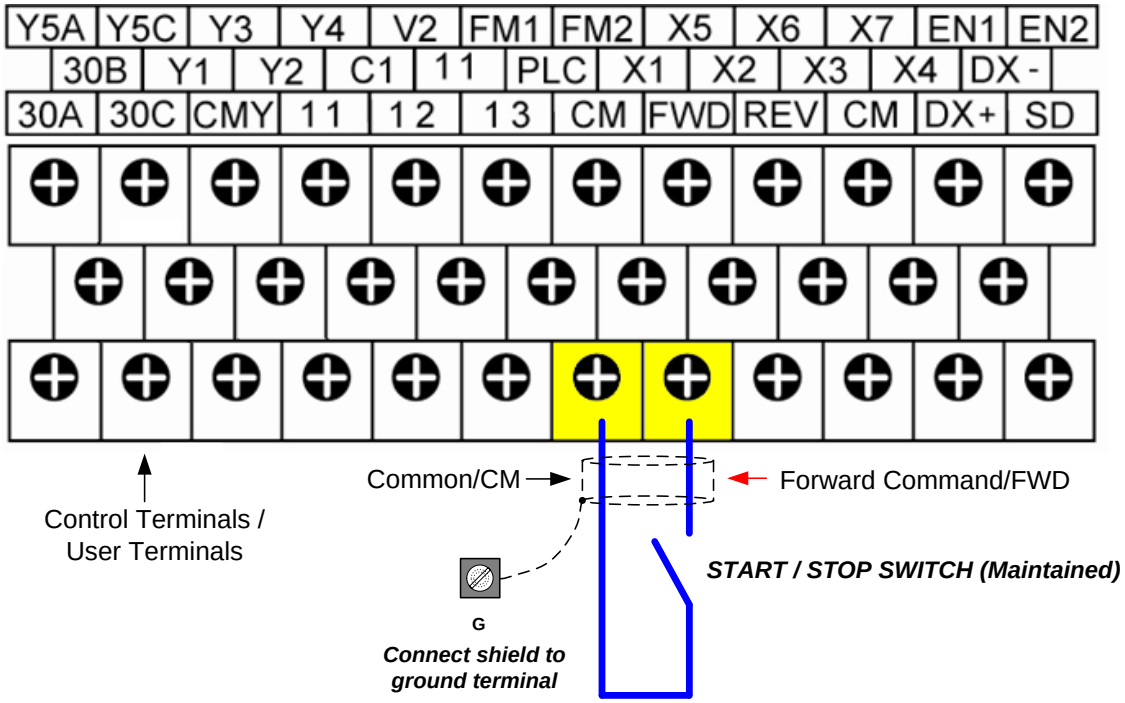

Momentary Contacts (Push Buttons)

Use push button / momentary switch to Run and Stop the EQ7 drive.

F02 Operation Method = 1

E07 Terminal [X7] Function = 6

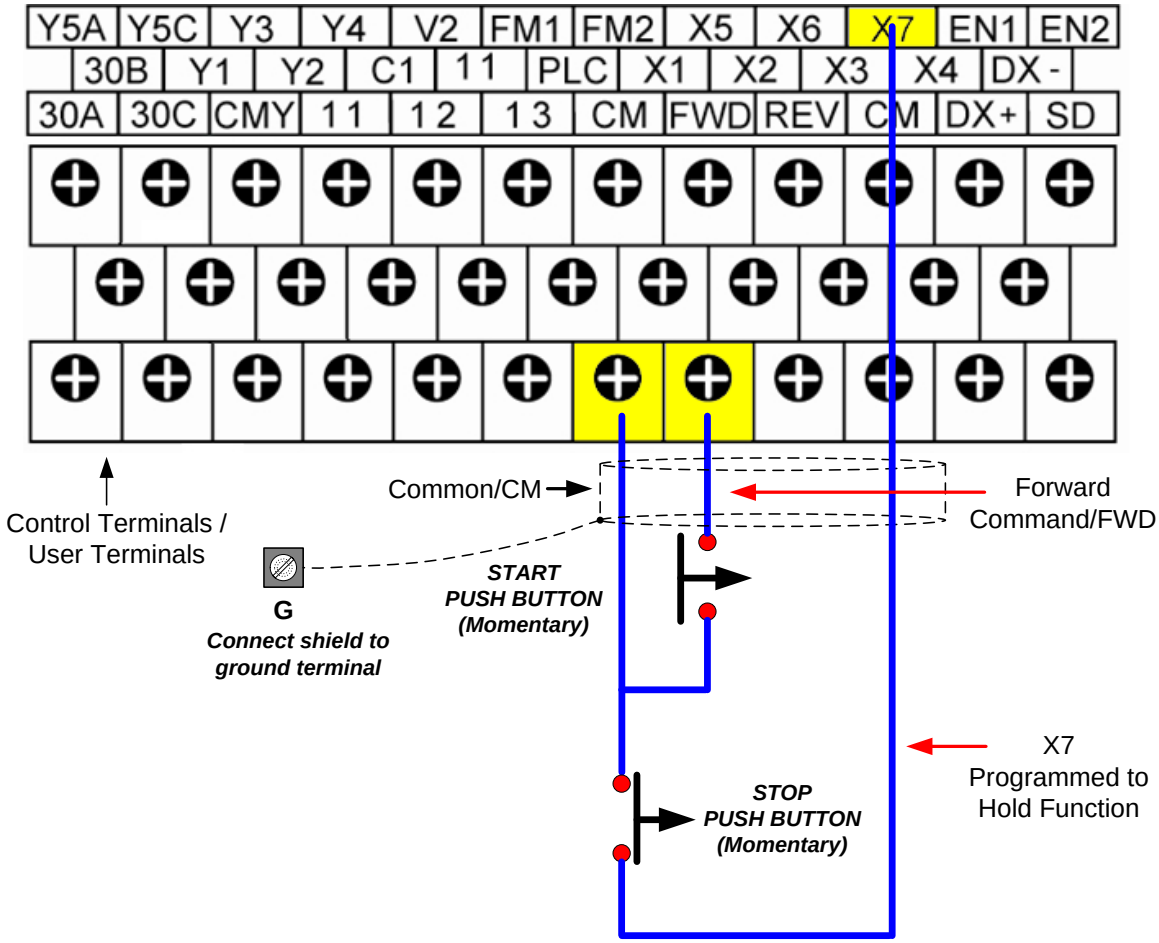

Note: Stop method can be set with parameter H07, default is ***ramp to stop***.

8.3 Run/Stop from Serial Communication RS485 (H30 = 6 or 8)

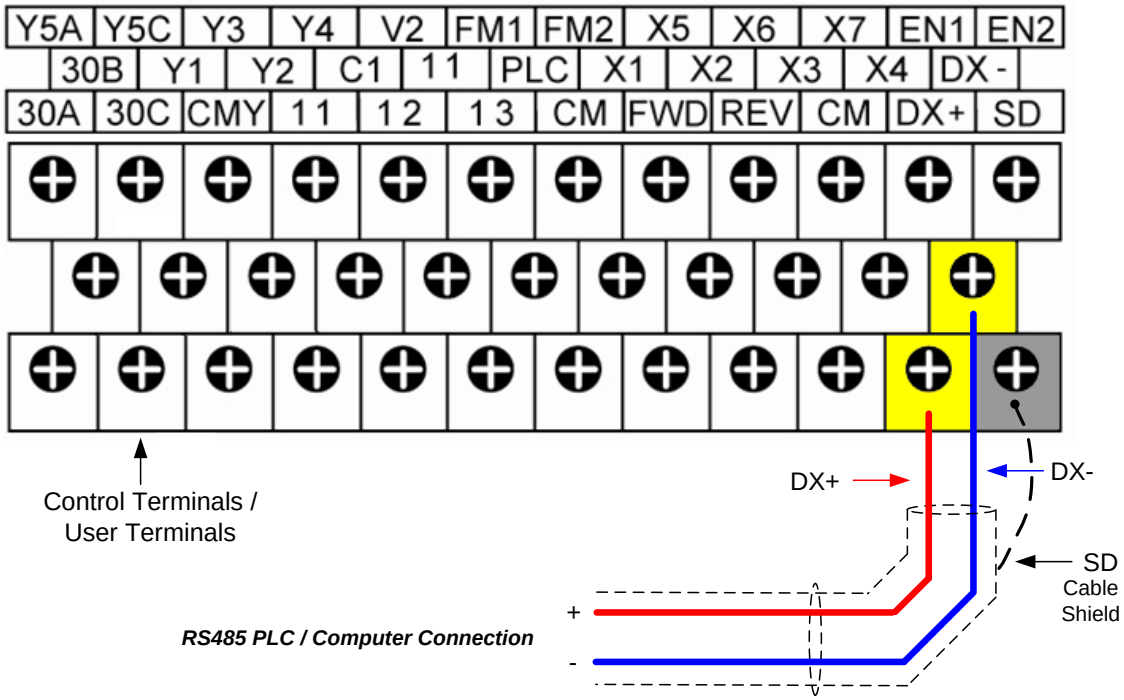

To Run/Stop (Operation Command) the EQ7 drive via serial communication parameter H30 has be set to either a “6” for Run/Stop via serial communication only or to “8” for Run/Stop (Operation Command) and Frequency Reference (Frequency Command).

Default Communication Setting is: Address “1”, 9600 Bits/sec, 1 Start Bit, 1 Stop Bit, and No Parity

H30 **Communications Link Function**

This function sets the communication link function to select run/stop and frequency reference control.

Setting range: 0 to 8

To set parameter H30:

- Press **PRG** key, next select **QUICK SET or DATA SET** with **UP/DOWN** and keys and press the **FUNC/DATA** key.
- In the parameter list move cursor to H30 with **UP/DOWN** keys and press **FUNC/DATA** key to select.

The serial communication link function uses RS485 Modbus RTU protocol and allows for:
1) Monitoring (data monitoring, function data check).
2) Frequency setting.
3) Operation command (FWD, REV, and other commands for digital input).
4) Write function data.

H30 **Communications Link Function**

Set value	Frequency command	Run command (Run/Stop)
0	F01 / C30	F02
1	Enabled / RS485 (Port 1)	F02
2	F01 / C30	Enabled / RS485 (Port 1)
3	Enabled / RS485 (Port 1)	Enabled / RS485 (Port 1)
4	Enabled / RS485 (Port 2)	F02
5	Enabled / RS485 (Port 2)	Enabled / RS485 (Port 1)
6	F01 / C30	Enabled / RS485 (Port 2)
7	Enabled / RS485 (Port 1)	Enabled / RS485 (Port 2)
8	Enabled / RS485 (Port 2)	Enabled / RS485 (Port 2)

See Parameter y11 – y20 forRS485 communication setup.

Command Register

EQ7 Drive Command Register: 1798 (Decimal)

Bit 0: Run Forward
Bit 1: Run Reverse
Bit 2 ~ Bit 15: Refer to the EQ7 Drive AC Drive Instruction Manual

Examples:

Run Forward Command (EQ7 Drive Address: 01)

Command String (hexadecimal): 01 06 07 06 00 01 A9 7F

Run Reverse Command (EQ7 Drive Address: 01)

Command String (hexadecimal): 01 06 07 06 00 02 E9 7E

Stop Command (EQ7 Drive Address: 01)

Command String (hexadecimal): 01 06 07 06 00 00 68 BF

Note: The last 2 bytes of the command strings consist of a CRC16 checksum, please refer to the Refer to the EQ7 Communications Manual for additional information.

9. Motor and Application Specific Settings

It is essential that before running the motor, the motor nameplate data matches the motor data in the EQ7 drive.

9.1 Set Motor Name Plate Data (P02, P03, F11)

P02 **Motor 1 (Capacity)**

The nominal motor rated capacity is set at the factory. Please verify that the motor name plate data matches the motor rated capacity shown in parameter P02. The setting should only be changed when driving a motor with a different capacity.

Range: 0.01 to 1000 HP

To set parameter P02:

- Press **PRG** key, next select **QUICK SET or DATA SET** with **UP/DOWN** and keys and press the **FUNC/DATA** key.
- In the parameter list move cursor to P02 with **UP/DOWN** keys and press **FUNC/DATA** key to select.

Note: For kW rating motor set P99 to 4.

Default values vary based on the EQ7 drive model.

The motor rated current is set at the factory based on the EQ7 drive model. Enter the motor rated current from the motor nameplate if it does not match the value shown in parameter P3.

P03 **Motor 1 (Rated Current)**

This function sets the motor rated current value of motor 1.

Setting range: 0.00 to 2,000A

To set parameter P03:

- Press **PRG** key, next select **QUICK SET or DATA SET** with **UP/DOWN** and keys and press the **FUNC/DATA** key.
- In the parameter list move cursor to P03 with **UP/DOWN** keys and press **FUNC/DATA** key to select.

F11 **Overload Detection Level**

This function sets the operation current level for the electronic thermal O/L. Verify that the motor FLA on the motor nameplate matches the overload level shown in parameter F11

Setting range: 1 to 135% of the rated current of the inverter.

To set parameter F11:

- Press **PRG** key, next select **QUICK SET or DATA SET** with **UP/DOWN** and keys and press the **FUNC/DATA** key.
- In the parameter list move cursor to F11 with **UP/DOWN** keys and press **FUNC/DATA** key to select.

Appendix: EQ7 Parameter Overview (Fundamental Functions)

For full parameter list refer to the EQ7 Instruction Manual Chapter 4.

F codes: Fundamental Functions (Parameters in QUICK SET menu are shaded in this table)

Code	Name	Data setting range	Change when running	Data copying	Default setting	Drive control		User's Setting
						V/f	Vector Control w/o PG	
F00	Data Protection	0: Disable both data protection and digital reference protection 1: Enable data protection and disable digital reference protection 2: Disable data protection and enable digital reference protection 3: Enable both data protection and digital reference protection	Y	Y	0	Y	Y	
F01	Frequency Command 1	0: ⌃ / ⌄ keys on keypad 1: Voltage input to terminal [12] (-10 to +10 VDC) 2: Current input to terminal [C1] (4 to 20 mA DC) 3: Sum of voltage and current inputs to terminals [12] and [C1] 5: Voltage input to terminal [V2] (-10 to +10 VDC) 7: Terminal command ***UP/DOWN*** control 8: ⌃ / ⌄ keys on keypad (balanceless-bumpless switching available) 11: Digital input interface card (option) 12: Pulse train input	N	Y	0	Y	Y	
F02	Operation Method	0: Keypad 1: Terminal command ***FWD*** or ***REV*** 2: Keypad (Forward direction) 3: Keypad (Reverse direction)	N	Y	0	Y	Y	
F03	Maximum Frequency 1	25.0 to 500.0 Hz	N	Y	60.0	Y	Y	
F04	Base Frequency 1	25.0 to 500.0 Hz	N	Y	60.0	Y	Y	
F05	Rated Voltage at Base Frequency 1	0: Output a voltage in proportion to input voltage 80 to 240 V: Output an AVR-controlled voltage (for 230 V series) 160 to 500 V: Output an AVR-controlled voltage (for 460 V series)	N	Y2	230 460	Y	Y	
F06	Maximum Output Voltage 1	80 to 240 V: Output an AVR-controlled voltage (for 230 V series) 160 to 500 V: Output an AVR-controlled voltage (for 460 V series)	N	Y2	230 460	Y	N	
F07	Acceleration Time 1	0.00 to 6000 s Note: Entering 0.00 cancels the acceleration time, requiring external soft-start.	Y	Y	*1	Y	Y	
F08	Deceleration Time 1		Y	Y	*1	Y	Y	
F09	Torque Boost 1	0.0% to 20.0% (percentage with respect to "Rated Voltage at Base Frequency 1")	Y	Y	0.0	Y	N	

Y: Applicable / N: Not Applicable. The shaded function codes are applicable to the quick setup.

Code	Name	Data setting range	Change when running	Data copying	Default setting	Drive control		User's Setting
						V/f	Vector Control w/o PG	
F10	Electronic Thermal Overload Protection for Motor 1 (Select motor characteristics)	1: For a general-purpose motor with shaft-driven cooling fan 2: For an inverter-driven motor, non-ventilated motor, or motor with separately powered cooling fan	Y	Y	1	Y	Y	
F11	(Overload detection level)	0.00: Disable 1% to 135% of the rated current (allowable continuous drive current) of the motor	Y	Y1 Y2	*2	Y	Y	
F12	(Thermal time constant)	0.5 to 75.0 min	Y	Y	*3	Y	Y	
F14	Restart Mode after Momentary Power Failure (Mode selection)	0: Trip immediately 1: Trip after a recovery from power failure 2: Trip after decelerate-to-stop 3: Continue to run, for heavy inertia or general loads 4: Restart at the frequency at which the power failure occurred, for general loads 5: Restart at the starting frequency	Y	Y	0	Y	Y	
F15	Frequency Limiter (High)	0.0 to 500.0 Hz	Y	Y	70.0	Y	Y	
F16	Frequency Limiter (Low)	0.0 to 500.0 Hz	Y	Y	0.0	Y	Y	
F18	Bias (Frequency command 1)	-100.00% to 100.00%	Y*	Y	0.00	Y	Y	
F20	DC Braking 1 (Braking starting frequency)	0.0 to 60.0 Hz	Y	Y	0.0	Y	Y	
F21	DC Braking 1 (Braking level)	0% to 80% (LD/MD mode) *4, 0% to 100% (HD mode)	Y	Y	0	Y	Y	
F22	DC Braking 1 (Braking time)	0.00 (Disable); 0.01 to 30.00 s	Y	Y	0.00	Y	Y	
F24	DC Braking 1 (Holding time)	0.00 to 10.00 s	Y	Y	0.00	Y	Y	
F25	Stop Frequency	0.0 to 60.0 Hz	Y	Y	0.2	Y	Y	
F26	Motor Sound (Carrier frequency)	**Variable Torque Models** 0.5 to 30HP: 0.75 to 16 KHz 40 to 100HP: 0.75 to 10 KHz 125 to 900HP: 0.75 to 6 KHz 1000HP: 0.75 to 4 KHz **Constant Torque Models** 0.5 to 75HP: 0.75 to 16 KHz 100 to 125HP: 0.75 to 10 KHz 150 to 700HP: 0.75 to 2 KHz 800 to 900HP: 0.75 to 6 KHz **CT-V Models** 0.5 to 75HP: 0.75 to 16 KHz 100 to 700HP: 0.75 to 10 KHz 800 to 900HP: 0.75 to 6 KHz	Y	Y	2 KHz	Y	Y	

Y: Applicable / N: Not Applicable. The shaded function codes are applicable to the quick setup.

*1: 6.00 s for inverters of 40 HP or below; 20.00 s for those of 50 HP or above.
*2: The motor rated current is automatically set. See Table B (P03/A17).
*3: 5.0 min for inverters of 40 HP or below; 10.0 min for those of 50 HP or above.
*4: 0% to 100% for inverters of 7.5 HP or below, refer to F80 for LD/MD/HD mode definition.

Code	Name	Data setting range	Change when running	Data copying	Default setting	Drive control		User's Setting
						V/f	Vector Control w/o PG	
F27	Motor Sound (Tone)	0: Level 0 (Inactive) 1: Level 1 2: Level 2 3: Level 3	Y	Y	0	Y	N	
F29	Analog Output [FM1] (Mode selection)	0: Output in voltage (0 to 10 VDC) 1: Output in current (4 to 20 mA DC) 2: Output in current (0 to 20 mA DC)	Y	Y	0	Y	Y	
F30	(Voltage adjustment)	0% to 300%	Y	Y	100	Y	Y	
F31	Analog Output [FM1] (Function)	Select a function to be monitored from the followings. 0: Output frequency 1 (before slip compensation) 1: Output frequency 2 (after slip compensation) 2: Output current 3: Output voltage 4: Output torque 5: Load factor 6: Input power 7: PID feedback amount (PV) 8: PG feedback value 9: DC link bus voltage 10: Universal AO 13: Motor output 14: Calibration (+) 15: PID command (SV) 16: PID output (MV)	Y	Y	0	Y	Y	
		17: Positional deviation in synchronous run mode				N	N	
F32	Analog Output [FM2] (Mode selection)	0: Output in voltage (0 to 10 VDC) 1: Output in current (4 to 20 mA DC) 2: Output in current (0 to 20 mA DC)	Y	Y	0	Y	Y	
F34	(Voltage adjustment)	0% to 300%	Y	Y	100	Y	Y	
F35	Analog Output [FM2] (Function)	See F31 for selection 0 – 16.	Y	Y	0	Y	Y	
		17: Positional deviation in synchronous run mode				N	N	
F37	*5) Load Selection/ Auto Torque Boost/ Auto Energy Saving Operation 1	0: Variable torque load 1: Constant torque load 2: Auto torque boost 3: Auto energy saving (Variable torque load during ACC/DEC) 4: Auto energy saving (Constant torque load during ACC/DEC) 5: Auto energy saving (Auto torque boost during ACC/DEC)	N	Y	1	Y	N	
F38	Stop Frequency (Detection mode)	0: Detected speed 1: Reference speed	N	Y	0	N	N	

Y: Applicable / N: Not Applicable.

*5: Refer to EQ7 Instruction Manual F37 parameter description for detailed Load and V/F Pattern Selection.

Code	Name	Data setting range	Change when running	Data copying	Default setting	Drive control		User's Setting
						V/f	Vector Control w/o PG	
F39	Stop Frequency (Holding Time)	0.00 to 10.00 s	Y	Y	0.00	Y	Y	
F40	Torque Limiter 1-1	-300% to 300%; 999 (Disable)	Y	Y	999	Y	Y	
F41	1-2	-300% to 300%; 999 (Disable)	Y	Y	999	Y	Y	
F42	Drive Control Selection 1	0: V/f control with slip compensation inactive 1: Dynamic torque control 5: Vector control without speed sensor (PG) 6: Vector control with speed sensor (PG)	N	Y	0	Y	Y	
F43	Current Limiter (Mode selection)	0: Disable (No current limiter works.) 1: Enable at constant speed (Disable during ACC/DEC) 2: Enable during ACC/constant speed operation	Y	Y	2	Y	N	
F44	Current Limiter (Level)	20% to 200% (The data is interpreted as the rated output current of the inverter for 100%.)	Y	Y	*6	Y	N	
F50	Electronic Thermal Overload Protection for Braking Resistor (Discharging capability)	0 (Braking resistor built-in type), 1 to 9000 kW, OFF (Disable)	Y	Y1 Y2	*7	Y	Y	
F51	(Allowable average loss)	0.001 to 99.99 kW	Y	Y1 Y2	0.001	Y	Y	
F52	(Resistance)	0.01 to 999Ω	Y	Y1 Y2	0.01	Y	Y	
F80	Switching between LD, MD and HD drive modes	1: LD (Variable Torque mode) 2: MD (Constant Torque mode) 0: HD (CT-Vector mode)	N	Y	1	Y	Y	

Y: Applicable / N: Not Applicable.

*6: 160% for inverters of 7.5 HP or below; 130% for those of 10 HP or above.
*7: 0 for inverters of 15 HP or below; OFF for those of 20 HP or above.

IMPORTANT	**For full parameter list refer to the EQ7 Instruction Manual Chapter 4.**