*GROVE GEAR is proud to introduce our newest generation of Worm Gear products . . .*

# The 200 Series Flexaline Worm Gear Speed Reducers!

The *NEW* Grove Gear Flexaline Reducers incorporate several product enhancements that make it unique in an industry which has been depreciating the value of its products and services.

All unit types and sizes through the 5 1/4 inch center distance (size 252) will now come standard with:

- ***Chicago Rawhide Viton® Oil Seals,*** the premium sealing device available today.
- ***A single cover output design*** which ensures gear centering for maximum efficiency and minimum noise.
- ***Non-compressible metal shims*** which maintain factory bearing settings and gear alignment throughout the life of the product.
- ***"O" rings on input and output covers*** for positive retention of oil in the gear box.
- ***Quill Guard on quill style "C" flange units*** to protect the input oil seal during motor installation.

The *NEW* 200 Series Flexaline Worm Gear Reducer line carries on the Grove Gear tradition of offering competitive prices, high quality products, and on time deliveries of *ALL* cataloged reducers.

## New in this catalog . . .

- ***Motorized Reducers***
  See pages 133 to 154.
- ***Stainless Steel Reducers***
  See page 161.
- ***Grove Gold option*** on all sizes and types through size *252*
  See page 159.
- ***Riser Blocks - "R" Model***
  See pages 20 & 21.
- ***IEC Motor Flanges***
  See Dimension Sheets.
- ***Output "C" Face Worm Reducer - "C" Model***
  See pages 32 & 33.
- ***Quiet Reducers***
  See page 162.
- ***Improved assembly drawings***
  See pages 40, 72-78, 112-114, 132, 154.
- ***More Dimension Sheets***
  See pages 17, 53, 91, 123, 141.
- ***Instruction and Maintenance Manual***
  See pages 176-180.

## Index


| | Page |
|---|---|
| **How To Order** | 2 |
| **Standard Product Offering** | 3 |
| **Special Product Offering** | 4 |
| **Single Reduction Reducers** | |
| Single Reduction Index | 6 |
| Cutaway | 7 |
| Single Reduction Dimension Index | 17 |
| **Double Reduction Reducers** | |
| Double Reduction Index | 42 |
| Cutaway | 43 |
| Double Reduction Dimension Index | 53 |
| **Helical Worm Reducers** | |
| Helical Worm Index | 80 |
| Cutaway | 81 |
| Helical Worm Dimension Index | 91 |
| **Triple Reduction Reducers** | |
| Triple Reduction Index | 116 |
| Cutaway | 117 |
| Triple Reduction Dimension Index | 123 |
| **Motorized Reducers** | |
| Motorized Reducer Index | 133 |
| Cutaway | 134 |
| Single Phase Motorized Reducer | 136-141 |
| Three Phase Motorized Reducer | 142-153 |
| **Accessories** | 156 |
| **Engineering Information** | 165 |
| Instruction & Maintenance Manual | 176 |
| Parts Lists | 181 |
| **Ratio Multipliers** | 188 |
| **Terms and Conditions of Sale** | 193 |


**GROVE GEAR**

# How To Order

## Ordering Data & Nomenclature

### Ordering Data

When ordering reducers, please include the quantity, model style, unit size, ratio, assemble, motor flange size (when required), and output shaft bore diameter (when required).

*Note: When ordering a double input shaft for single reduction units, include the letter "A" added to the assembly position number in the unit description (i.e.: BMQ 226-30-2A-56C). When requesting a double input shaft for double and triple reduction units, contact factory. For availability of vertical double input shafts, consult the factory.*

### Flexaline Speed Reducer Nomenclature

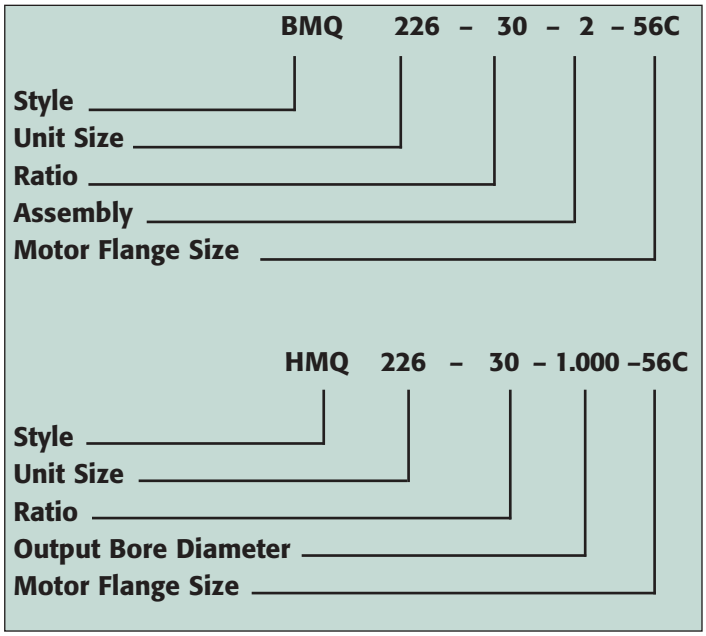


### Style

| | | |
|---|---|---|
| B | – | Basic Unit |
| T | – | Unit with Horizontal Base Worm Above |
| U | – | Unit with Horizontal Base Worm Under |
| M | – | Unit with Flexible Coupled "Motor Flange" |
| MQ | – | Unit with Quill Type Motor "C" Flange |
| H | – | Unit with Hollow Output Shaft |
| F | – | Unit with Output Mounting Flange |
| C | – | Unit with Output "C" Face |
| R | – | Unit with Riser Block |
| J | – | Unit with "J" Mounting Brackets |
| VL | – | Unit with Vertical Low Mounting Brackets |
| VH | – | Unit with Vertical High Mounting Brackets |
| VLH | – | Vertical Low Hollow |
| VHH | – | Vertical High Hollow |
| FE | – | Extended Bearing Design |
| D | – | Double Reduction Unit (Worm/Worm) |
| DX | – | Double Reduction Unit (Helical/Worm) |
| T | – | Triple Reduction Units (Worm/Worm/Worm) |

### Ratio

See Rating Data on pages 12-15, 48-51, 86-89 and 119-121.

### Assembly

See Dimension drawings for available assemblies on pages 18-39, 54-78, 92-114 and 132.

### Unit Size

| | | |
|---|---|---|
| 213 | – | 1-1/3" Center Distance |
| 215 | – | 1-1/2" Center Distance |
| 218 | – | 1-3/4" Center Distance |
| 220 | – | 2-1/16" Center Distance |
| 224 | – | 2-3/8" Center Distance |
| 226 | – | 2-5/8" Center Distance |
| 230 | – | 3" Center Distance |
| 232 | – | 3-1/4" Center Distance |
| 242 | – | 4-1/4" Center Distance |
| 252 | – | 5-1/4" Center Distance |
| 2600 | – | 6" Center Distance |
| 2700 | – | 7" Center Distance |
| 2800 | – | 8" Center Distance |
| 21000 | – | 10" Center Distance |

### NEMA Motor Flange Size

48CZ, 56C, 143TC, 145TC, 182TC, 184TC, 213TC, 215TC, 254TC, and 256TC

### Metric Motor Flange Size

D63D, D71D, D80D, D90D, D100MD, D112LD, D132D

### Hollow Shaft Bore Diameter

See page 169.

# GROVE GEAR Standard Product Offering
## *Worm Gear Speed Reducers*


| | |
|---|---|
| ***Single Reduction*** | • 1-1/3" C.D. through 10" C.D<br>• 5:1 Ratio through 100:1 Ratio<br><br>*Pages 5 - 40* |
| ***Double Reduction Worm/Worm*** | • 1-1/3" C.D. through 10" C.D.<br>• 75:1 Ratio through 3,600:1 Ratio<br><br>*Pages 41 - 78* |
| ***Double Reduction Helical/Worm*** | • 1-1/3" C.D. through 10" C.D.<br>• 10:1 Ratio through 300:1 Ratio<br><br>*Pages 79 - 114* |
| ***Triple Reduction Worm/Worm/Worm*** | • 1-1/3" C.D. through 10" C.D.<br>• 1,000:1 Ratio through 216,000:1 Ratio<br><br>*Pages 115 - 132* |
| ***Motorized Reducers Single Reduction*** | • 1-1/3" C.D. through 3 1/4" C.D.<br>• 5:1 Ratio through 100:1 Ratio<br><br>*Pages 133 - 154* |
| ***Kits & Accessories*** | All sizes and types of Worm Gear Reducers<br><br>*Pages 155 - 163* |
| ***Engineering Data*** | All sizes and types of Worm Gear Reducers<br><br>*Pages 164 - 187* |
| ***Ratio Multiplier (Helical Gear Speed Reducer)*** | • 3 Sizes<br>• 2:1 Ratio through 5:1 Ratio<br><br>*Pages 188 - 192* |

# Grove Gear Special Product Offering
# Worm Gear Speed Reducers

## Grove Gold

*Page 159*

A dependable lubrication & maintenance-free reducer. Using premium Chicago Rawhide Viton® shaft seals, "O"-ring sealed covers, and an exclusive internal pressure compensating system. The high efficiency, cool running reducers come sealed from the factory to keep oil in and water and contaminants out.

## BISSC Certified

*Page 160*

Grove Gear Flexaclean reducers meet and exceed the demanding BISSC Certification standards. The units come standard with USDA approved white paint on a smooth, cleanable exterior, nickel plated shafts, and a Stainless Steel BISSC Certified Nameplate.

## Stainless Steel

*Page 161*

Grove Gear "S.S." reducers are the premier heavy duty Worm Gear Speed Reducer. The all Stainless Steel reducer will survive the harshest environments. Tired of Paint and Rust problems? The Grove Gear "S.S." reducer is the answer.

## Quiet Drives

*Page 162*

Coming soon are special reducers for quiet room applications. These special reducers will be tailored to each unique application. Selected sizes, ratios, and style will be available.

## Special Shafts

*Page 163*

Standard double extended input shafts are available on all Worm Gear Reducers. Both "C" face and solid shaft designs are offered on sizes 213-2600. For other "special" shafts, input or output, contact the factory. Grove Gear specializes in meeting your non-standard requirements.

# The Single Reduction Flexaline Speed Reducer

New and improved dimension and assembly drawings, quick reference charts and rating tables plus more in the Single Reduction section...

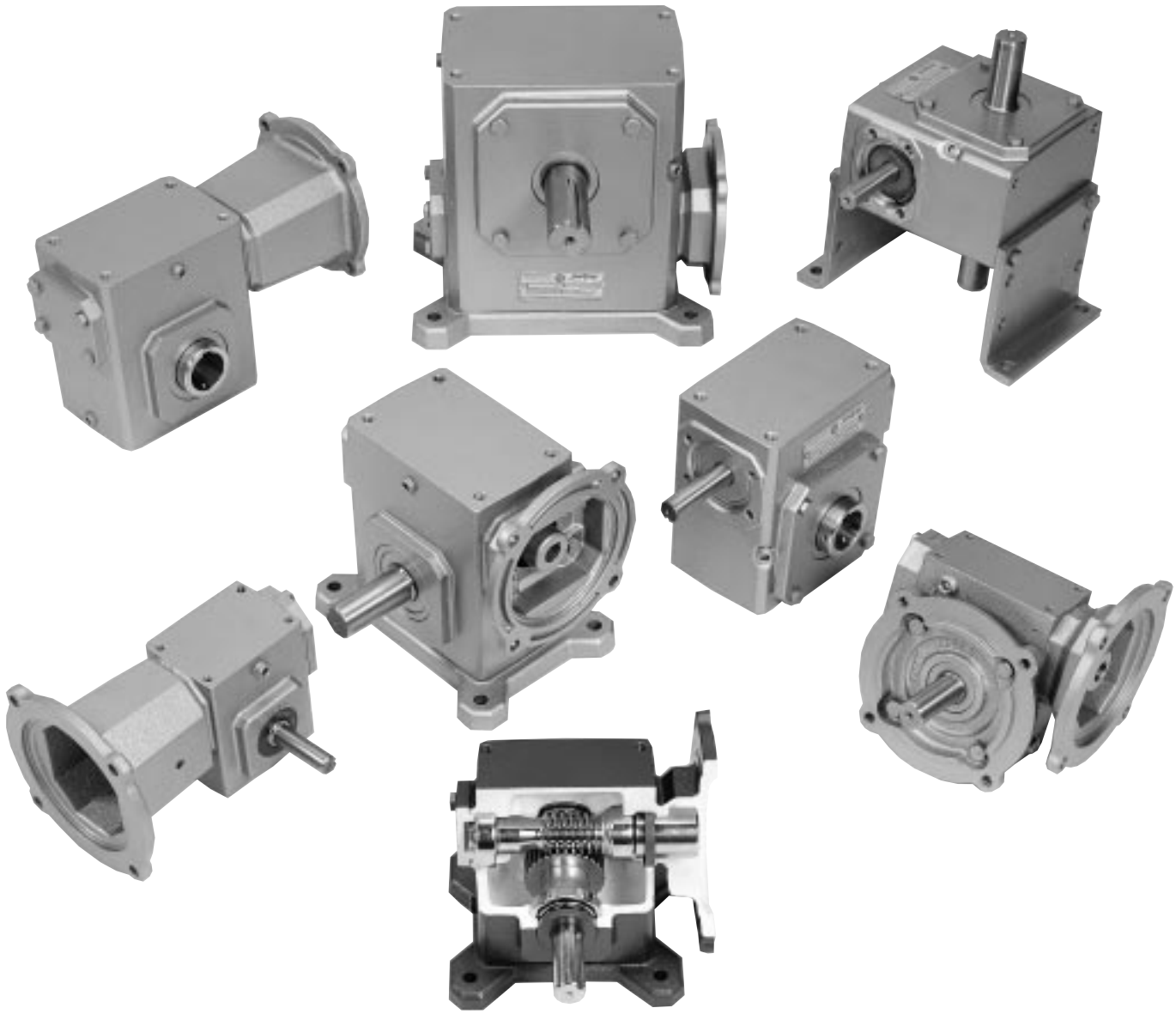

# Single Reduction
# Flexaline Speed Reducers

**Page**

**Cutaway** . . . . . 7

**Selection Guide** . . . . . 8

**Quick Reference Selection Charts**
- Class I Service 1.0 Service Factor . . . . . 10
- Class II Service 1.25 Service Factor . . . . . 10

**Approximate Shipping Weights** . . . . . 11

**Rating Tables**
- Size 213 to Size 220 . . . . . 12
- Size 224 to Size 230 . . . . . 13
- Size 232 to Size 2600 . . . . . 14
- Size 2700 to Size 21000 . . . . . 15

**Low Speed Shaft Thrust Capacity** . . . . . 16

**High Speed Shaft O.H.L. Capacity** . . . . . 16

**Drop Bearing Design O.H.L. Ratings** . . . . . 16

**Dimension Sheet Index** . . . . . 17

**Dimension Sheets** . . . . . 18 - 39

**Engineering Information** . . . . . 164

**Parts List** . . . . . 182

*Single Reduction*

# Worm Reduction Product Features

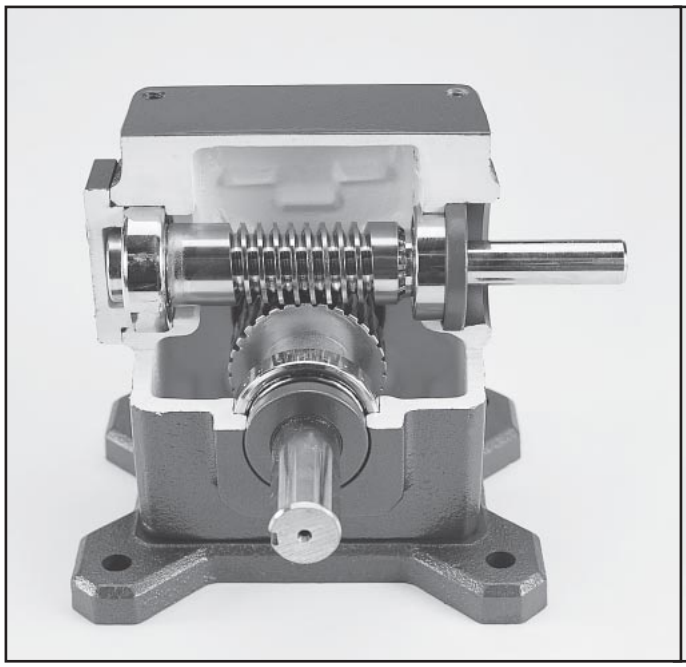

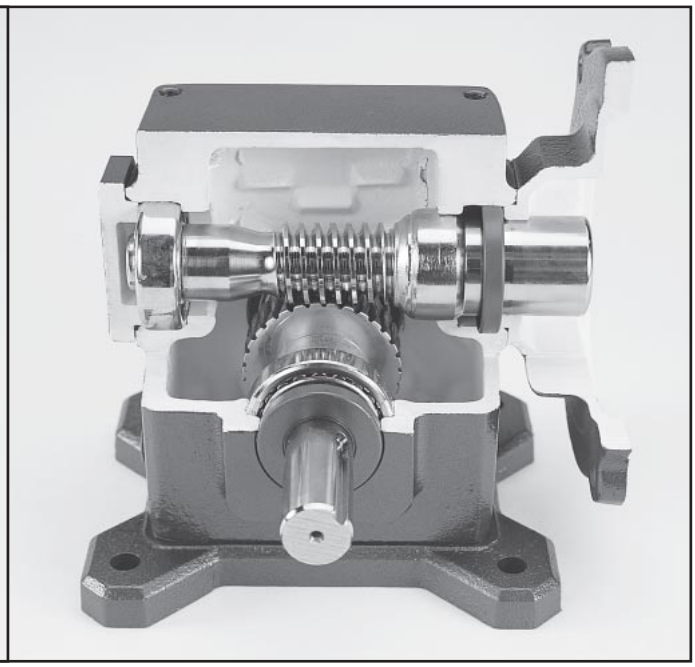

- **Rugged iron housings**, covers, and flanges provide superior strength and rigidity.
- **Single cover output design** ensures gear centering for maximum efficiency and minimum noise levels.*
- The **worm shaft** is cut integral with the input shaft then hardened, ground, and polished to provide maximum efficiency with minimum gear noise.
- The **bronze worm gear** is chill cast from the highest quality bronze to provide superior wear and lubricity characteristics for longer life and higher efficiency.
- **Premium tapered roller bearings** on output shafts provide greater life, overhung load and thrust capacity.
- **Oversized steel output shaft** provides superior overhung load and torque characteristics.
- **Premium Chicago Rawhide Viton® double lip seals** provide extended life because of increased resistance to high temperature, abrasion and chemicals.*
- **O-rings on input and output covers** provide positive sealing without undependable gaskets or messy silicone sealants.*
- **Non-compressible metal shims** maintain factory bearing settings and gear alignment throughout the life of the product.*
- The unique **quill seal guard** protects the input seal from damage during motor installation.*
- **Large oil capacity** provides positive splash lubrication and superior cooling capability.
- **Metal nameplate drive screwed to housing** insures easy field identification for repair parts and replacement.
- **Units are oil filled at the factory** with the proper lubrication to provide simple and economical installation.**
- **All units are 100% run and leak tested** at the factory to insure that you receive the highest quality product.

** Standard on unit sizes up to and including 5 1/4 inch center distance only. (Size 213 to 252)*
*** Seven, eight, and ten inch center distance reducers are shipped without oil. (Sizes 2700, 2800 and 21000)*

# Single Reduction

## Worm Gear Selection Guide

### Style B

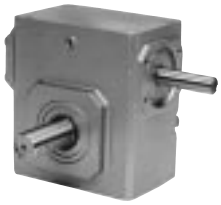

*Ratings - Pg. 12-15*
*Dimensions - Pg. 18-19*

### Style BM

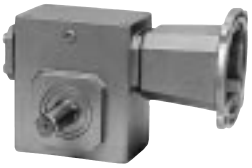

*Ratings - Pg. 12-15*
*Dimensions - Pg. 18-19*

### Style BMQ

*Ratings - Pg. 12-15*
*Dimensions - Pg. 18-19*

### Style R

*Ratings - Pg. 12-15*
*Dimensions - Pg. 20-21*

### Style RM

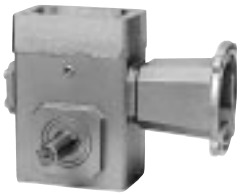

*Ratings - Pg. 12-15*
*Dimensions - Pg. 20-21*

### Style RMQ

*Ratings - Pg. 12-15*
*Dimensions - Pg. 20-21*

### Style T

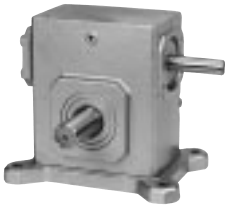

*Ratings - Pg. 12-15*
*Dimensions - Pg. 22-23*

### Style TM

*Ratings - Pg. 12-15*
*Dimensions - Pg. 22-23*

### Style TMQ

*Ratings - Pg. 12-15*
*Dimensions - Pg. 22-23*

### Style U

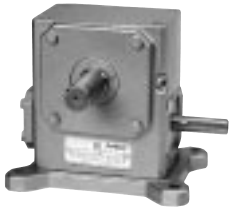

*Ratings - Pg. 12-15*
*Dimensions - Pg. 24-25*

### Style UM

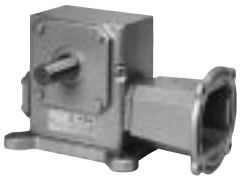

*Ratings - Pg. 12-15*
*Dimensions - Pg. 24-25*

### Style UMQ

*Ratings - Pg. 12-15*
*Dimensions - Pg. 24-25*

### Style VL

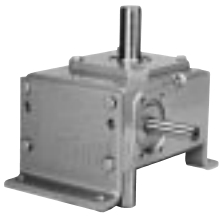

*Ratings - Pg. 12-15*
*Dimensions - Pg. 26-27*

### Style VLM

*Ratings - Pg. 12-15*
*Dimensions - Pg. 26-27*

### Style VLMQ

*Ratings - Pg. 12-15*
*Dimensions - Pg. 26-27*

### Style VH

*Ratings - Pg. 12-15*
*Dimensions - Pg. 26-27*

### Style VHM

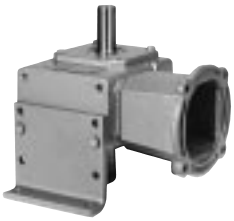

*Ratings - Pg. 12-15*
*Dimensions - Pg. 26-27*

### Style VHMQ

*Ratings - Pg. 12-15*
*Dimensions - Pg. 26-27*

### Style J

*Ratings - Pg. 12-15*
*Dimensions - Pg. 28-29*

### Style JM

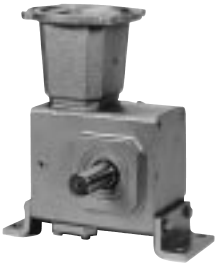

*Ratings - Pg. 12-15*
*Dimensions - Pg. 28-29*

# Single Reduction

## Worm Gear Selection Guide

### Style JMQ

*Ratings - Pg. 12-15*
*Dimensions - Pg. 28-29*

### Style F

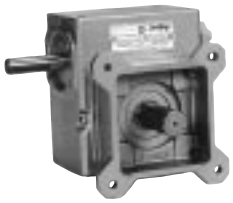

*Ratings - Pg. 12-15*
*Dimensions - Pg. 30-31*

### Style FM

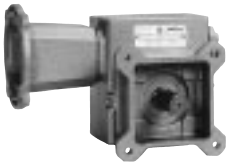

*Ratings - Pg. 12-15*
*Dimensions - Pg. 30-31*

### Style FMQ

*Ratings - Pg. 12-15*
*Dimensions - Pg. 30-31*

### Style C

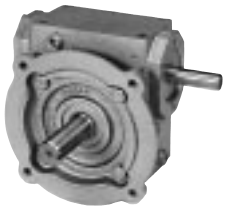

*Ratings - Pg. 12-15*
*Dimensions - Pg. 32-33*

### Style CM

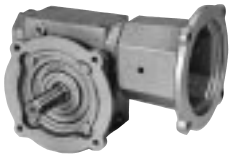

*Ratings - Pg. 12-15*
*Dimensions - Pg. 32-33*

### Style CMQ

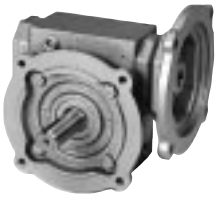

*Ratings - Pg. 12-15*
*Dimensions - Pg. 32-33*

### Style H

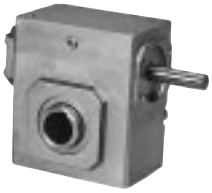

*Ratings - Pg. 12-15*
*Dimensions - Pg. 34-35*

### Style HM

*Ratings - Pg. 12-15*
*Dimensions - Pg. 34-35*

### Style HMQ

*Ratings - Pg. 12-15*
*Dimensions - Pg. 34-35*

### Style FH

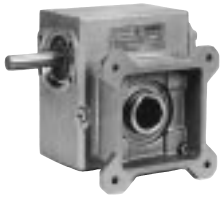

*Ratings - Pg. 12-15*
*Dimensions - Pg. 36-37*

### Style FHM

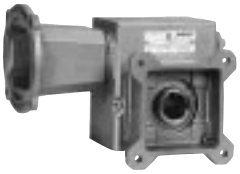

*Ratings - Pg. 12-15*
*Dimensions - Pg. 36-37*

### Style FHMQ

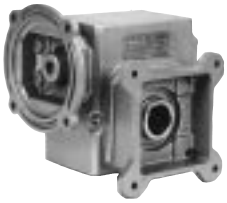

*Ratings - Pg. 12-15*
*Dimensions - Pg. 36-37*

### Style VLH

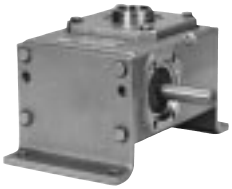

*Ratings - Pg. 12-15*
*Dimensions - Pg. *

### Style VLHM

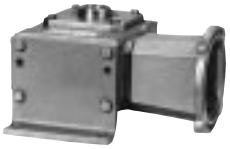

*Ratings - Pg. 12-15*
*Dimensions - Pg. *

### Style VLHMQ

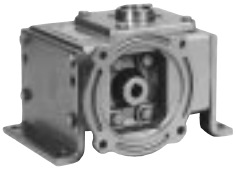

*Ratings - Pg. 12-15*
*Dimensions - Pg. *

### Style FE

*Ratings - Pg. 14-15*
*Dimensions - Pg. 38-39*

### Style FEM

*Ratings - Pg. 14-15*
*Dimensions - Pg. 38-39*

### Style FEMQ

*Ratings - Pg. 14-15*
*Dimensions - Pg. 38-39*

### Style JHMQ

*Ratings - Pg. 12-15*
*Dimensions - Pg. *

**Contact factory for dimension information.*

# Single Reduction

## Quick Reference Model Selection Chart

### Class I *(1.0 Service Factor)*

| Reduc. Ratio | Output RPM | Input Horsepower @ 1750 RPM | | | | | | | | | | | | | | | | | | | | |
|---|---|---|---|---|---|---|---|---|---|---|---|---|---|---|---|---|---|---|---|---|---|---|
| | | 1/6 | 1/4 | 1/3 | 1/2 | 3/4 | 1 | 11/2 | 2 | 3 | 5 | 71/2 | 10 | 15 | 20 | 25 | 30 | 40 | 50 | 60 | 75 | 100 |
| 5 | 350 | 213 | 213 | 213 | 213 | 213 | 213 | 215 | 220 | 224 | 230 | 232 | 242 | 242 | 252 | 252 | 2600 | 2700 | 2700 | 2800 | 21000 | 21000 |
| 7.5 | 233 | 213 | 213 | 213 | 213 | 213 | 215 | 218 | 220 | 224 | 230 | 232 | 242 | 252 | 252 | 2600 | 2700 | 2700 | 2800 | 21000 | 21000 | |
| 10 | 175 | 213 | 213 | 213 | 213 | 213 | 215 | 220 | 220 | 224 | 230 | 242 | 242 | 252 | 2600 | 2700 | 2700 | 2800 | 21000 | 21000 | | |
| 15 | 117 | 213 | 213 | 213 | 213 | 215 | 218 | 220 | 224 | 230 | 232 | 242 | 252 | 2600 | 2700 | 2700 | 2800 | 21000 | 21000 | | | |
| 20 | 87.5 | 213 | 213 | 213 | 215 | 218 | 220 | 224 | 226 | 230 | 242 | 242 | 252 | 2700 | 2700 | 2800 | 21000 | 21000 | | | | |
| 25 | 70.0 | 213 | 213 | 213 | 215 | 220 | 220 | 224 | 230 | 232 | 242 | 252 | 2600 | 2700 | 2800 | 21000 | 21000 | | | | | |
| 30 | 58.3 | 213 | 213 | 213 | 218 | 220 | 224 | 226 | 230 | 232 | 242 | 252 | 2700 | 2800 | 21000 | 21000 | | | | | | |
| 40 | 43.8 | 213 | 213 | 215 | 220 | 224 | 224 | 230 | 232 | 242 | 252 | 2600 | 2700 | 21000 | 21000 | | | | | | | |
| 50 | 35 | 213 | 215 | 215 | 220 | 224 | 226 | 230 | 242 | 242 | 252 | 2700 | 2800 | 21000 | | | | | | | | |
| 60 | 29.2 | 213 | 215 | 220 | 224 | 226 | 230 | 232 | 242 | 252 | 2600 | 2800 | 21000 | | | | | | | | | |
| 70 | 25.0 | NA | NA | NA | NA | NA | NA | NA | NA | NA | 2700 | 2800 | 21000 | | | | | | | | | |
| 80 | 21.9 | 215 | 220 | 224 | 226 | 230 | 232 | 242 | 252 | 2600 | | | | | | | | | | | | |
| 100 | 17.5 | 220 | 224 | 226 | 230 | 242 | 242 | 252 | 252 | | | | | | | | | | | | | |

NOT AVAILABLE

*NOTE: This chart is meant only as a guide. For actual ratings see pages 12-15.*

### Class II *(1.25 Service Factor)*

| Reduc. Ratio | Output RPM | Input Horsepower @ 1750 RPM | | | | | | | | | | | | | | | | | | | | |
|---|---|---|---|---|---|---|---|---|---|---|---|---|---|---|---|---|---|---|---|---|---|---|
| | | 1/6 | 1/4 | 1/3 | 1/2 | 3/4 | 1 | 11/2 | 2 | 3 | 5 | 71/2 | 10 | 15 | 20 | 25 | 30 | 40 | 50 | 60 | 75 | 100 |
| 5 | 350 | 213 | 213 | 213 | 213 | 213 | 215 | 220 | 220 | 224 | 230 | 242 | 242 | 252 | 252 | 2600 | 2700 | 2700 | 2800 | 21000 | 21000 | |
| 7.5 | 233 | 213 | 213 | 213 | 213 | 215 | 215 | 220 | 224 | 226 | 232 | 242 | 242 | 252 | 2600 | 2700 | 2700 | 2800 | 21000 | 21000 | | |
| 10 | 175 | 213 | 213 | 213 | 213 | 215 | 218 | 220 | 224 | 226 | 232 | 242 | 242 | 252 | 2700 | 2700 | 2800 | 21000 | 21000 | | | |
| 15 | 117 | 213 | 213 | 213 | 215 | 218 | 220 | 224 | 226 | 230 | 242 | 242 | 252 | 2700 | 2700 | 2800 | 21000 | 21000 | | | | |
| 20 | 87.5 | 213 | 213 | 213 | 215 | 220 | 220 | 224 | 230 | 232 | 242 | 242 | 2600 | 2700 | 2800 | 21000 | 21000 | | | | | |
| 25 | 70 | 213 | 213 | 215 | 218 | 220 | 224 | 226 | 230 | 242 | 242 | 252 | 2700 | 2800 | 21000 | 21000 | | | | | | |
| 30 | 58.3 | 213 | 213 | 215 | 220 | 224 | 224 | 230 | 232 | 242 | 252 | 252 | 2700 | 21000 | 21000 | | | | | | | |
| 40 | 43.8 | 213 | 215 | 218 | 220 | 224 | 226 | 232 | 242 | 242 | 252 | 2600 | 2800 | 21000 | | | | | | | | |
| 50 | 35 | 213 | 215 | 220 | 224 | 226 | 230 | 232 | 242 | 252 | 2600 | 2700 | 21000 | | | | | | | | | |
| 60 | 29.2 | 215 | 218 | 220 | 224 | 230 | 230 | 232 | 242 | 252 | 2700 | 2800 | 21000 | | | | | | | | | |
| 70 | 25 | NA | NA | NA | NA | NA | NA | NA | 2700 | 2700 | 2800 | 21000 | | | | | | | | | | |
| 80 | 21.9 | 215 | 220 | 224 | 230 | 232 | 242 | 252 | 252 | 2600 | | | | | | | | | | | | |
| 100 | 17.5 | 220 | 224 | 230 | 232 | 242 | 252 | 252 | 2600 | | | | | | | | | | | | | |

NOT AVAILABLE

*NOTE: This chart is meant only as a guide. For actual ratings see pages 12-15.*

**For Class III** *(2.0 Service Factor)* **contact factory.**

*Single Reduction*

# Worm Gear Approximate Shipping Weights (LBS.)

| STYLE | 213 | 215 | 218 | 220 | 224 | 226 | 230 | 232 | 242 | 252 | 2600 | 2700 | 2800 | 21,000 |
|---|---|---|---|---|---|---|---|---|---|---|---|---|---|---|
| B | 14 | 20 | 22 | 27 | 38 | 51 | 76 | 79 | 136 | 232 | 321 | 399 | 582 | 904 |
| BM | 21 | 27 | 29 | 34 | 47 | 60 | 91 | 94 | 154 | 254 | 361 | 429 | 612 | - |
| BMQ | 17 | 22 | 24 | 30 | 46 | 59 | 80 | 83 | 146 | 247 | 344 | - | - | - |
| R | - | 27 | 29 | 36 | 46 | 68 | 89 | 110 | 156 | 246 | - | - | - | - |
| RM | - | 34 | 36 | 43 | 54 | 77 | 104 | 125 | 174 | 268 | - | - | - | - |
| RMQ | - | 29 | 31 | 39 | 53 | 76 | 93 | 114 | 166 | 261 | - | - | - | - |
| T&U | 17 | 22 | 25 | 30 | 46 | 61 | 92 | 95 | 146 | 254 | 341 | 440 | 630 | 980 |
| TM & UM | 24 | 29 | 32 | 37 | 60 | 70 | 107 | 110 | 164 | 276 | 371 | 470 | 660 | - |
| TMQ & UMQ | 19 | 24 | 26 | 33 | 54 | 69 | 96 | 99 | 156 | 269 | 364 | - | - | - |
| VL & VH | 18 | 24 | 26 | 35 | 46 | 62 | 90 | 93 | 164 | 267 | 348 | 470 | 660 | 1060 |
| VLM & VHM | 25 | 31 | 33 | 42 | 55 | 71 | 105 | 108 | 182 | 289 | 378 | 500 | 690 | - |
| VLMQ & VHMQ | 20 | 26 | 27 | 48 | 54 | 70 | 94 | 97 | 174 | 282 | 371 | - | - | - |
| J | 15 | 22 | 24 | 30 | 41 | 55 | 82 | 85 | 177 | 250 | - | - | - | - |
| JM | 22 | 29 | 31 | 37 | 50 | 64 | 97 | 100 | 165 | 272 | - | - | - | - |
| JMQ | 18 | 24 | 26 | 33 | 49 | 63 | 86 | 89 | 157 | 265 | - | - | - | - |
| F | 17 | 22 | 25 | 31 | 48 | 61 | 92 | 95 | 148 | 250 | 333 | 414 | 600 | 925 |
| FM | 24 | 29 | 32 | 38 | 62 | 71 | 107 | 110 | 166 | 272 | 363 | 444 | 630 | - |
| FMQ | 19 | 24 | 26 | 34 | 56 | 69 | 96 | 99 | 152 | 265 | 356 | - | - | - |
| C | 17 | - | 25 | - | 48 | - | - | - | - | - | - | - | - | - |
| CM | 24 | - | 32 | - | 62 | - | - | - | - | - | - | - | - | - |
| CMQ | 19 | - | 26 | - | 56 | - | - | - | - | - | - | - | - | - |
| H | 14 | 20 | 23 | 28 | 44 | 54 | 76 | 79 | 136 | 222 | 321 | 399 | 582 | 904 |
| HM | 21 | 27 | 30 | 37 | 52 | 62 | 91 | 94 | 154 | 254 | 361 | 429 | 612 | - |
| HMQ | 17 | 22 | 25 | 33 | 47 | 57 | 80 | 83 | 146 | 247 | 344 | - | - | - |
| FH | 15 | 22 | 26 | 32 | 49 | 59 | 92 | 95 | 148 | 250 | 333 | 414 | 600 | 925 |
| FHM | 22 | 29 | 33 | 40 | 57 | 67 | 107 | 110 | 166 | 272 | 363 | 444 | 630 | - |
| FHMQ | 18 | 24 | 27 | 34 | 52 | 62 | 96 | 99 | 158 | 265 | 356 | - | - | - |
| FE | - | - | - | - | - | - | 86 | 89 | 166 | 263 | 363 | 560 | 780 | 1180 |
| FEM | - | - | - | - | - | - | 101 | 104 | 184 | 275 | 383 | 590 | 810 | - |
| FEMQ | - | - | - | - | - | - | 90 | 93 | 176 | 268 | 376 | - | - | - |

## Flexaline Accessories
## Approximate Shipping Weights (LBS.)

| ACCESSORY | | 213 | 215 | 218 | 220 | 224 | 226 | 230 | 232 | 242 | 252 | 2600 | 2700 | 2800 | 21000 |
|---|---|---|---|---|---|---|---|---|---|---|---|---|---|---|---|
| HORIZONTAL BASE | | 3 | 3 | 3 | 3 | 8 | 10 | 16 | 16 | 18 | 22 | 31 | 41 | 48 | 76 |
| RISER BLOCK | | - | 7 | 7 | 9 | 9 | 17 | 15 | 31 | 24 | 15 | - | - | - | - |
| VERTICAL BASE | | 4 | 4 | 4 | 8 | 8 | 11 | 14 | 14 | 28 | 36 | 36 | 71 | 78 | 156 |
| J MOUNT BASE | | 1 | 2 | 2 | 3 | 3 | 4 | 6 | 6 | 11 | 18 | - | - | - | - |
| "C" Flange Kits | 56-140 | 7 | 7 | 7 | 7 | 8 | 8 | 11 | 11 | 14 | 16 | - | - | - | - |
| | 180-210 | - | - | - | - | 11 | 11 | 11 | 11 | 16 | 18 | 22 | 30 | 30 | - |
| | 250 | - | - | - | - | - | - | - | 28 | 30 | 30 | 32 | 34 | - | - |

# Single Reduction

## Worm Gear Rating Table

| Ratio | Input RPM | Output RPM | Size 213 Input HP | Size 213 Output HP | Size 213 Output TQ | Size 213 OHL | Size 215 Input HP | Size 215 Output HP | Size 215 Output TQ | Size 215 OHL | Size 218 Input HP | Size 218 Output HP | Size 218 Output TQ | Size 218 OHL | Size 220 Input HP | Size 220 Output HP | Size 220 Output TQ | Size 220 OHL |
|---|---|---|---|---|---|---|---|---|---|---|---|---|---|---|---|---|---|---|
| 5 | 2500 | 500.0 | 1.247 | 1.140 | 144 | 700 | 1.872 | 1.717 | 216 | 860 | 2.619 | 2.438 | 307 | 1200 | 2.928 | 2.737 | 345 | 1000 |
| | **1750** | **350.0** | **1.058** | **0.956** | **172** | **700** | **1.615** | **1.464** | **263** | **860** | **2.256** | **2.078** | **374** | **1200** | **2.510** | **2.323** | **418** | **1000** |
| | 1170 | 234.0 | 0.826 | 0.735 | 198 | 700 | 1.317 | 1.174 | 316 | 860 | 1.843 | 1.675 | 451 | 1200 | 2.104 | 1.922 | 517 | 1000 |
| | 870 | 174.0 | 0.668 | 0.587 | 213 | 700 | 1.091 | 0.960 | 347 | 860 | 1.527 | 1.372 | 497 | 1200 | 1.766 | 1.596 | 578 | 1000 |
| | 100 | 20.0 | 0.101 | 0.081 | 256 | 700 | 0.176 | 0.141 | 443 | 860 | 0.245 | 0.202 | 636 | 1200 | 0.293 | 0.243 | 766 | 1000 |
| 7 1/2 | 2500 | 333.3 | 1.064 | 0.963 | 182 | 700 | 1.387 | 1.240 | 234 | 860 | 1.957 | 1.801 | 340 | 1200 | 2.715 | 2.518 | 476 | 1035 |
| | **1750** | **233.3** | **0.871** | **0.778** | **210** | **700** | **1.237** | **1.089** | **294** | **860** | **1.667** | **1.516** | **409** | **1200** | **2.389** | **2.191** | **592** | **1035** |
| | 1170 | 156.0 | 0.662 | 0.581 | 235 | 700 | 1.007 | 0.867 | 350 | 860 | 1.306 | 1.169 | 472 | 1200 | 1.918 | 1.733 | 700 | 1035 |
| | 870 | 116.0 | 0.528 | 0.457 | 248 | 700 | 0.834 | 0.706 | 383 | 860 | 1.058 | 0.936 | 508 | 1200 | 1.575 | 1.406 | 763 | 1035 |
| | 100 | 13.3 | 0.077 | 0.061 | 288 | 700 | 0.137 | 0.102 | 484 | 860 | 0.160 | 0.130 | 614 | 1200 | 0.247 | 0.202 | 954 | 1035 |
| 10 | 2500 | 250.0 | 0.885 | 0.780 | 197 | 700 | 1.143 | 0.994 | 250 | 860 | 1.643 | 1.495 | 377 | 1200 | 2.450 | 2.250 | 567 | 1065 |
| | **1750** | **175.0** | **0.733** | **0.634** | **228** | **700** | **1.021** | **0.869** | **313** | **860** | **1.368** | **1.227** | **442** | **1200** | **2.092** | **1.896** | **682** | **1065** |
| | 1170 | 117.0 | 0.563 | 0.476 | 257 | 700 | 0.833 | 0.690 | 372 | 860 | 1.053 | 0.928 | 500 | 1200 | 1.642 | 1.463 | 788 | 1065 |
| | 870 | 87.0 | 0.452 | 0.376 | 272 | 700 | 0.692 | 0.561 | 406 | 860 | 0.846 | 0.736 | 533 | 1200 | 1.332 | 1.172 | 848 | 1065 |
| | 100 | 10.0 | 0.068 | 0.050 | 318 | 700 | 0.116 | 0.081 | 511 | 860 | 0.126 | 0.100 | 628 | 1200 | 0.203 | 0.163 | 1026 | 1065 |
| 15 | 2500 | 166.7 | 0.663 | 0.558 | 211 | 700 | 0.862 | 0.709 | 268 | 860 | 1.209 | 1.054 | 398 | 1200 | 1.834 | 1.634 | 618 | 1125 |
| | **1750** | **116.7** | **0.551** | **0.452** | **244** | **700** | **0.774** | **0.619** | **334** | **860** | **1.026** | **0.876** | **473** | **1200** | **1.561** | **1.366** | **738** | **1125** |
| | 1170 | 78.0 | 0.425 | 0.339 | 274 | 700 | 0.637 | 0.490 | 396 | 860 | 0.803 | 0.669 | 540 | 1200 | 1.225 | 1.048 | 846 | 1125 |
| | 870 | 58.0 | 0.343 | 0.267 | 290 | 700 | 0.533 | 0.398 | 433 | 860 | 0.653 | 0.532 | 578 | 1200 | 0.995 | 0.837 | 909 | 1125 |
| | 100 | 6.7 | 0.053 | 0.036 | 338 | 700 | 0.093 | 0.057 | 542 | 860 | 0.102 | 0.073 | 690 | 1200 | 0.154 | 0.115 | 1090 | 1125 |
| 20 | 2500 | 125.0 | 0.528 | 0.429 | 216 | 700 | 0.713 | 0.560 | 282 | 860 | 0.977 | 0.832 | 419 | 1200 | 1.457 | 1.259 | 635 | 1175 |
| | **1750** | **87.5** | **0.437** | **0.344** | **248** | **700** | **0.639** | **0.484** | **349** | **860** | **0.814** | **0.677** | **487** | **1200** | **1.243** | **1.050** | **756** | **1175** |
| | 1170 | 58.5 | 0.336 | 0.256 | 275 | 700 | 0.526 | 0.382 | 411 | 860 | 0.630 | 0.508 | 547 | 1200 | 0.978 | 0.803 | 865 | 1175 |
| | 870 | 43.5 | 0.271 | 0.201 | 291 | 700 | 0.441 | 0.309 | 447 | 860 | 0.508 | 0.402 | 581 | 1200 | 0.797 | 0.641 | 928 | 1175 |
| | 100 | 5.0 | 0.042 | 0.027 | 335 | 700 | 0.079 | 0.044 | 556 | 860 | 0.078 | 0.054 | 679 | 1200 | 0.126 | 0.088 | 1110 | 1175 |
| 25 | 2500 | 100.0 | 0.447 | 0.344 | 217 | 700 | 0.606 | 0.456 | 287 | 860 | 0.803 | 0.666 | 419 | 1200 | 1.194 | 1.010 | 636 | 1210 |
| | **1750** | **70.0** | **0.375** | **0.279** | **251** | **700** | **0.544** | **0.392** | **353** | **860** | **0.665** | **0.537** | **483** | **1200** | **1.005** | **0.829** | **746** | **1210** |
| | 1170 | 46.8 | 0.293 | 0.208 | 280 | 700 | 0.449 | 0.308 | 414 | 860 | 0.512 | 0.400 | 539 | 1200 | 0.784 | 0.627 | 844 | 1210 |
| | 870 | 34.8 | 0.239 | 0.164 | 297 | 700 | 0.377 | 0.248 | 450 | 860 | 0.413 | 0.315 | 570 | 1200 | 0.636 | 0.497 | 899 | 1210 |
| | 100 | 4.0 | 0.039 | 0.022 | 345 | 700 | 0.069 | 0.035 | 556 | 860 | 0.064 | 0.042 | 659 | 1200 | 0.100 | 0.067 | 1059 | 1210 |
| 30 | 2500 | 83.3 | 0.389 | 0.287 | 217 | 700 | 0.516 | 0.364 | 275 | 860 | 0.696 | 0.545 | 412 | 1200 | 1.043 | 0.849 | 642 | 1255 |
| | **1750** | **58.3** | **0.328** | **0.232** | **251** | **700** | **0.472** | **0.317** | **343** | **860** | **0.597** | **0.451** | **487** | **1200** | **0.896** | **0.706** | **763** | **1255** |
| | 1170 | 39.0 | 0.258 | 0.174 | 281 | 700 | 0.397 | 0.251 | 406 | 860 | 0.475 | 0.343 | 555 | 1200 | 0.711 | 0.540 | 872 | 1255 |
| | 870 | 29.0 | 0.211 | 0.128 | 301 | 700 | 0.338 | 0.204 | 443 | 860 | 0.390 | 0.273 | 593 | 1200 | 0.583 | 0.430 | 934 | 1255 |
| | 100 | 3.3 | 0.035 | 0.018 | 345 | 700 | 0.065 | 0.029 | 555 | 860 | 0.065 | 0.037 | 705 | 1200 | 0.096 | 0.059 | 1115 | 1255 |
| 40 | 2500 | 62.5 | 0.308 | 0.214 | 215 | 700 | 0.427 | 0.279 | 281 | 860 | 0.554 | 0.416 | 419 | 1200 | 0.821 | 0.631 | 636 | 1315 |
| | **1750** | **43.8** | **0.260** | **0.171** | **247** | **700** | **0.391** | **0.241** | **347** | **860** | **0.469** | **0.338** | **486** | **1200** | **0.710** | **0.524** | **755** | **1315** |
| | 1170 | 29.3 | 0.204 | 0.127 | 274 | 700 | 0.330 | 0.190 | 408 | 860 | 0.369 | 0.253 | 545 | 1200 | 0.568 | 0.400 | 862 | 1315 |
| | 870 | 21.8 | 0.167 | 0.100 | 289 | 700 | 0.282 | 0.153 | 444 | 860 | 0.302 | 0.200 | 579 | 1200 | 0.469 | 0.319 | 924 | 1315 |
| | 100 | 2.5 | 0.028 | 0.013 | 332 | 700 | 0.056 | 0.022 | 552 | 860 | 0.050 | 0.027 | 674 | 1200 | 0.080 | 0.044 | 1102 | 1315 |
| 50 | 2500 | 50.0 | 0.252 | 0.165 | 208 | 700 | 0.360 | 0.219 | 276 | 860 | 0.448 | 0.321 | 405 | 1200 | 0.659 | 0.488 | 615 | 1385 |
| | **1750** | **35.0** | **0.211** | **0.131** | **237** | **700** | **0.331** | **0.188** | **339** | **860** | **0.377** | **0.258** | **465** | **1200** | **0.563** | **0.399** | **719** | **1385** |
| | 1170 | 23.4 | 0.165 | 0.097 | 261 | 700 | 0.281 | 0.148 | 398 | 860 | 0.296 | 0.192 | 518 | 1200 | 0.448 | 0.302 | 812 | 1385 |
| | 870 | 17.4 | 0.135 | 0.076 | 274 | 700 | 0.241 | 0.119 | 432 | 860 | 0.242 | 0.151 | 548 | 1200 | 0.368 | 0.239 | 864 | 1385 |
| | 100 | 2.0 | 0.023 | 0.010 | 312 | 700 | 0.048 | 0.017 | 533 | 860 | 0.040 | 0.020 | 632 | 1200 | 0.062 | 0.032 | 1016 | 1385 |
| 60 | 2500 | 41.7 | 0.214 | 0.131 | 198 | 700 | 0.307 | 0.175 | 264 | 860 | 0.374 | 0.254 | 384 | 1200 | 0.561 | 0.388 | 586 | 1415 |
| | **1750** | **29.2** | **0.181** | **0.104** | **226** | **700** | **0.283** | **0.150** | **323** | **860** | **0.317** | **0.204** | **442** | **1200** | **0.491** | **0.322** | **696** | **1415** |
| | 1170 | 19.5 | 0.144 | 0.077 | 249 | 700 | 0.242 | 0.117 | 378 | 860 | 0.251 | 0.152 | 492 | 1200 | 0.399 | 0.246 | 795 | 1415 |
| | 870 | 14.5 | 0.118 | 0.060 | 263 | 700 | 0.208 | 0.094 | 410 | 860 | 0.206 | 0.120 | 520 | 1200 | 0.333 | 0.196 | 851 | 1415 |
| | 100 | 1.7 | 0.021 | 0.008 | 300 | 700 | 0.043 | 0.013 | 505 | 860 | 0.035 | 0.016 | 600 | 1200 | 0.060 | 0.027 | 1015 | 1415 |
| 80 | 2500 | 31.3 | 0.144 | 0.081 | 163 | 700 | 0.219 | 0.109 | 220 | 860 | 0.247 | 0.156 | 314 | 1200 | 0.357 | 0.236 | 476 | 1495 |
| | **1750** | **21.9** | **0.121** | **0.064** | **183** | **700** | **0.204** | **0.093** | **269** | **860** | **0.208** | **0.124** | **356** | **1200** | **0.304** | **0.190** | **547** | **1495** |
| | 1170 | 14.6 | 0.096 | 0.047 | 201 | 700 | 0.176 | 0.073 | 314 | 860 | 0.164 | 0.091 | 392 | 1200 | 0.241 | 0.141 | 609 | 1495 |
| | 870 | 10.9 | 0.079 | 0.036 | 210 | 700 | 0.152 | 0.059 | 340 | 860 | 0.134 | 0.071 | 413 | 1200 | 0.198 | 0.111 | 644 | 1495 |
| | 100 | 1.3 | 0.014 | 0.005 | 237 | 700 | 0.032 | 0.008 | 418 | 860 | 0.023 | 0.009 | 470 | 1200 | 0.034 | 0.015 | 743 | 1495 |
| 100 | 2500 | 25.0 | 0.100 | 0.051 | 128 | 700 | 0.155 | 0.069 | 175 | 860 | 0.167 | 0.097 | 245 | 1200 | 0.251 | 0.150 | 379 | 1580 |
| | **1750** | **17.5** | **0.084** | **0.040** | **143** | **700** | **0.145** | **0.059** | **213** | **860** | **0.141** | **0.077** | **277** | **1200** | **0.217** | **0.122** | **439** | **1580** |
| | 1170 | 11.7 | 0.067 | 0.029 | 156 | 700 | 0.126 | 0.046 | 248 | 860 | 0.111 | 0.057 | 304 | 1200 | 0.175 | 0.091 | 491 | 1580 |
| | 870 | 8.7 | 0.055 | 0.023 | 164 | 700 | 0.109 | 0.037 | 268 | 860 | 0.092 | 0.044 | 319 | 1200 | 0.146 | 0.072 | 521 | 1580 |
| | 100 | 1.0 | 0.010 | 0.003 | 184 | 700 | 0.024 | 0.005 | 328 | 860 | 0.016 | 0.006 | 362 | 1200 | 0.026 | 0.010 | 605 | 1580 |

*Note: All torque values listed in inch-pounds, all overhung load values listed in pounds. The point of application of the overhung load is considered to be one shaft diameter measured outward from the gear case housing. See page 16 for extended bearing (Styles FE, FEM & FEMQ) and input shaft overhung load (OHL) capacity. At speeds above 1750 RPM, units may become thermally limited. For extended operation, limit input HP to 1750 RPM catalog rating.*

# Single Reduction

## Worm Gear Rating Table

| Ratio | Input RPM | Output RPM | Size 224 Input HP | Size 224 Output HP | Size 224 Output TQ | Size 224 OHL | Size 226 Input HP | Size 226 Output HP | Size 226 Output TQ | Size 226 OHL | Size 230 Input HP | Size 230 Output HP | Size 230 Output TQ | Size 230 OHL |
|---|---|---|---|---|---|---|---|---|---|---|---|---|---|---|
| 5 | 2500 | 500.0 | 4.594 | 4.326 | 545 | 1770 | 5.548 | 5.240 | 682 | 1625 | 7.726 | 7.325 | 923 | 2170 |
| | **1750** | **350.0** | **3.889** | **3.628** | **653** | **1770** | **4.804** | **4.496** | **836** | **1625** | **6.683** | **6.285** | **1131** | **2170** |
| | 1170 | 234.0 | 3.340 | 3.078 | 829 | 1770 | 4.052 | 3.747 | 1042 | 1625 | 5.645 | 5.249 | 1413 | 2170 |
| | 870 | 174.0 | 2.839 | 2.589 | 937 | 1770 | 3.473 | 3.180 | 1190 | 1625 | 4.948 | 4.556 | 1650 | 2170 |
| | 100 | 20.0 | 0.486 | 0.408 | 1286 | 1770 | 0.608 | 0.513 | 1669 | 1625 | 0.918 | 0.779 | 2454 | 2170 |
| 7 1/2 | 2500 | 333.3 | 4.024 | 3.752 | 709 | 1770 | 4.974 | 4.660 | 881 | 1625 | 7.145 | 6.713 | 1269 | 2170 |
| | **1750** | **233.3** | **3.466** | **3.195** | **863** | **1770** | **4.266** | **3.954** | **1068** | **1625** | **6.049** | **5.624** | **1519** | **2170** |
| | 1170 | 156.0 | 2.872 | 2.609 | 1053 | 1770 | 3.583 | 3.275 | 1322 | 1625 | 5.210 | 4.779 | 1930 | 2170 |
| | 870 | 116.0 | 2.396 | 2.151 | 1168 | 1770 | 3.010 | 2.720 | 1477 | 1625 | 4.435 | 4.023 | 2185 | 2170 |
| | 100 | 13.3 | 0.393 | 0.322 | 1523 | 1770 | 0.501 | 0.415 | 1962 | 1625 | 0.765 | 0.636 | 3003 | 2170 |
| 10 | 2500 | 250.0 | 3.484 | 3.215 | 810 | 1770 | 4.522 | 4.194 | 1057 | 1625 | 6.344 | 5.897 | 1486 | 2170 |
| | **1750** | **175.0** | **3.083** | **2.809** | **1011** | **1770** | **3.903** | **3.575** | **1287** | **1625** | **5.450** | **5.005** | **1802** | **2170** |
| | 1170 | 117.0 | 2.487 | 2.229 | 1200 | 1770 | 3.198 | 2.882 | 1552 | 1625 | 4.586 | 4.144 | 2232 | 2170 |
| | 870 | 87.0 | 2.048 | 1.811 | 1311 | 1770 | 2.654 | 2.361 | 1710 | 1625 | 3.859 | 3.442 | 2493 | 2170 |
| | 100 | 10.0 | 0.325 | 0.261 | 1646 | 1770 | 0.430 | 0.348 | 2193 | 1625 | 0.649 | 0.526 | 3312 | 2170 |
| 15 | 2500 | 166.7 | 2.612 | 2.341 | 885 | 1770 | 3.370 | 3.068 | 1160 | 1625 | 4.858 | 4.404 | 1665 | 2170 |
| | **1750** | **116.7** | **2.303** | **2.028** | **1095** | **1770** | **2.921** | **2.618** | **1414** | **1625** | **4.207** | **3.751** | **2026** | **2170** |
| | 1170 | 78.0 | 1.857 | 1.598 | 1291 | 1770 | 2.321 | 2.041 | 1648 | 1625 | 3.507 | 3.062 | 2473 | 2170 |
| | 870 | 58.0 | 1.530 | 1.294 | 1406 | 1770 | 1.896 | 1.643 | 1784 | 1625 | 2.941 | 2.524 | 2742 | 2170 |
| | 100 | 6.7 | 0.247 | 0.185 | 1749 | 1770 | 0.296 | 0.231 | 2187 | 1625 | 0.498 | 0.378 | 3573 | 2170 |
| 20 | 2500 | 125.0 | 2.076 | 1.808 | 911 | 1770 | 2.690 | 2.375 | 1197 | 1625 | 3.720 | 3.288 | 1657 | 2170 |
| | **1750** | **87.5** | **1.828** | **1.557** | **1121** | **1770** | **2.371** | **2.051** | **1477** | **1625** | **3.233** | **2.799** | **2015** | **2170** |
| | 1170 | 58.5 | 1.476 | 1.222 | 1316 | 1770 | 1.913 | 1.613 | 1737 | 1625 | 2.717 | 2.291 | 2467 | 2170 |
| | 870 | 43.5 | 1.218 | 0.987 | 1430 | 1770 | 1.578 | 1.305 | 1890 | 1625 | 2.291 | 1.891 | 2739 | 2170 |
| | 100 | 5.0 | 0.200 | 0.170 | 1768 | 1770 | 0.258 | 0.186 | 2345 | 1625 | 0.400 | 0.284 | 3584 | 2170 |
| 25 | 2500 | 100.0 | 1.724 | 1.464 | 922 | 1770 | 2.225 | 1.923 | 1211 | 1625 | 3.170 | 2.737 | 1724 | 2170 |
| | **1750** | **70.0** | **1.510** | **1.249** | **1124** | **1770** | **1.945** | **1.641** | **1477** | **1625** | **2.768** | **2.332** | **2099** | **2170** |
| | 1170 | 46.8 | 1.215 | 0.973 | 1310 | 1770 | 1.561 | 1.279 | 1722 | 1625 | 2.319 | 1.895 | 2551 | 2170 |
| | 870 | 34.8 | 1.003 | 0.783 | 1418 | 1770 | 1.286 | 1.030 | 1864 | 1625 | 1.955 | 1.558 | 2821 | 2170 |
| | 100 | 4.0 | 0.166 | 0.110 | 1738 | 1770 | 0.210 | 0.145 | 2286 | 1625 | 0.345 | 0.232 | 3653 | 2170 |
| 30 | 2500 | 83.3 | 1.484 | 1.218 | 921 | 1770 | 1.902 | 1.608 | 1216 | 1625 | 2.717 | 2.287 | 1729 | 2170 |
| | **1750** | **58.3** | **1.319** | **1.049** | **1133** | **1770** | **1.654** | **1.362** | **1471** | **1625** | **2.382** | **1.949** | **2105** | **2170** |
| | 1170 | 39.0 | 1.076 | 0.824 | 1330 | 1770 | 1.325 | 1.055 | 1705 | 1625 | 2.004 | 1.582 | 2556 | 2170 |
| | 870 | 29.0 | 0.896 | 0.665 | 1445 | 1770 | 1.090 | 0.847 | 1840 | 1625 | 1.694 | 1.301 | 2826 | 2170 |
| | 100 | 3.3 | 0.155 | 0.095 | 1789 | 1770 | 0.179 | 0.118 | 2238 | 1625 | 0.305 | 0.193 | 3656 | 2170 |
| 40 | 2500 | 62.5 | 1.165 | 0.906 | 914 | 1770 | 1.497 | 1.194 | 1203 | 1625 | 2.063 | 1.645 | 1659 | 2170 |
| | **1750** | **43.8** | **1.040** | **0.778** | **1121** | **1770** | **1.335** | **1.027** | **1479** | **1625** | **1.822** | **1.402** | **2018** | **2170** |
| | 1170 | 29.3 | 0.854 | 0.609 | 1312 | 1770 | 1.094 | 0.805 | 1735 | 1625 | 1.557 | 1.144 | 2464 | 2170 |
| | 870 | 21.8 | 0.714 | 0.492 | 1424 | 1770 | 0.913 | 0.650 | 1884 | 1625 | 1.330 | 0.943 | 2731 | 2170 |
| | 100 | 2.5 | 0.127 | 0.070 | 1756 | 1770 | 0.161 | 0.092 | 2328 | 1625 | 0.252 | 0.141 | 3559 | 2170 |
| 50 | 2500 | 50.0 | 0.951 | 0.707 | 891 | 1770 | 1.214 | 0.930 | 1172 | 1625 | 1.727 | 1.320 | 1663 | 2170 |
| | **1750** | **35.0** | **0.847** | **0.602** | **1084** | **1770** | **1.076** | **0.792** | **1426** | **1625** | **1.535** | **1.125** | **2026** | **2170** |
| | 1170 | 23.4 | 0.695 | 0.468 | 1261 | 1770 | 0.880 | 0.616 | 1659 | 1625 | 1.312 | 0.912 | 2456 | 2170 |
| | 870 | 17.4 | 0.582 | 0.377 | 1364 | 1770 | 0.734 | 0.495 | 1794 | 1625 | 1.122 | 0.749 | 2714 | 2170 |
| | 100 | 2.0 | 0.105 | 0.053 | 1667 | 1770 | 0.130 | 0.070 | 2193 | 1625 | 0.217 | 0.111 | 3505 | 2170 |
| 60 | 2500 | 41.7 | 0.772 | 0.560 | 847 | 1770 | 0.998 | 0.736 | 1114 | 1625 | 1.430 | 1.045 | 1580 | 2170 |
| | **1750** | **29.2** | **0.674** | **0.466** | **1007** | **1770** | **0.883** | **0.623** | **1345** | **1625** | **1.279** | **0.891** | **1924** | **2170** |
| | 1170 | 19.5 | 0.545 | 0.357 | 1152 | 1770 | 0.722 | 0.482 | 1556 | 1625 | 1.100 | 0.722 | 2332 | 2170 |
| | 870 | 14.5 | 0.453 | 0.284 | 1235 | 1770 | 0.603 | 0.386 | 1678 | 1625 | 0.946 | 0.593 | 2576 | 2170 |
| | 100 | 1.7 | 0.080 | 0.039 | 1477 | 1770 | 0.108 | 0.054 | 2036 | 1625 | 0.188 | 0.088 | 3327 | 2170 |
| 80 | 2500 | 31.3 | 0.520 | 0.348 | 701 | 1770 | 0.659 | 0.456 | 919 | 1625 | 0.972 | 0.671 | 1352 | 2170 |
| | **1750** | **21.9** | **0.455** | **0.288** | **830** | **1770** | **0.577** | **0.379** | **1092** | **1625** | **0.895** | **0.585** | **1684** | **2170** |
| | 1170 | 14.6 | 0.370 | 0.219 | 946 | 1770 | 0.469 | 0.289 | 1247 | 1625 | 0.757 | 0.463 | 1996 | 2170 |
| | 870 | 10.9 | 0.309 | 0.175 | 1011 | 1770 | 0.391 | 0.231 | 1335 | 1625 | 0.646 | 0.376 | 2179 | 2170 |
| | 100 | 1.3 | 0.056 | 0.024 | 1202 | 1770 | 0.070 | 0.032 | 1593 | 1625 | 0.126 | 0.054 | 2731 | 2170 |
| 100 | 2500 | 25.0 | 0.351 | 0.219 | 551 | 1770 | 0.441 | 0.286 | 721 | 1625 | 0.656 | 0.424 | 1069 | 2170 |
| | **1750** | **17.5** | **0.307** | **0.180** | **648** | **1770** | **0.386** | **0.236** | **851** | **1625** | **0.603** | **0.367** | **1321** | **2170** |
| | 1170 | 11.7 | 0.251 | 0.136 | 735 | 1770 | 0.314 | 0.179 | 966 | 1625 | 0.511 | 0.289 | 1554 | 2170 |
| | 870 | 8.7 | 0.210 | 0.108 | 784 | 1770 | 0.262 | 0.143 | 1032 | 1625 | 0.437 | 0.234 | 1691 | 2170 |
| | 100 | 1.0 | 0.039 | 0.015 | 926 | 1770 | 0.048 | 0.019 | 1222 | 1625 | 0.087 | 0.033 | 2100 | 2170 |

*Note: All torque values listed in inch-pounds, all overhung load values listed in pounds. The point of application of the overhung load is considered to be one shaft diameter measured outward from the gear case housing. See page 16 for extended bearing (Styles FE, FEM & FEMQ) and input shaft overhung load (OHL) capacity. At speeds above 1750 RPM, units may become thermally limited. For extended operation, limit input HP to 1750 RPM catalog rating.*

# Single Reduction

## Worm Gear Rating Table

| Ratio | Input RPM | Output RPM | Size 232 Input HP | Size 232 Output HP | Size 232 Output TQ | Size 232 OHL | Size 242 Input HP | Size 242 Output HP | Size 242 Output TQ | Size 242 OHL | Size 252 Input HP | Size 252 Output HP | Size 252 Output TQ | Size 252 OHL | Size 2600 Input HP | Size 2600 Output HP | Size 2600 Output TQ | Size 2600 OHL |
|---|---|---|---|---|---|---|---|---|---|---|---|---|---|---|---|---|---|---|
| 5 | 2500 | 483.9 | 10.562 | 10.034 | 1306 | 2275 | 18.002 | 17.182 | 2237 | 2800 | 32.648 | 31.284 | 4040 | 3100 | 40.650 | 39.023 | 4917 | 3237 |
| | **1750** | **338.7** | **9.135** | **8.611** | **1602** | **2275** | **15.548** | **14.745** | **2742** | **2800** | **28.166** | **26.846** | **4953** | **3100** | **35.041** | **33.486** | **6028** | **3538** |
| | 1170 | 226.5 | 7.694 | 7.172 | 1995 | 2275 | 13.208 | 12.406 | 3451 | 2800 | 23.897 | 22.587 | 6233 | 3100 | 29.701 | 28.174 | 7585 | 3723 |
| | 870 | 168.4 | 6.799 | 6.278 | 2349 | 2275 | 11.627 | 10.827 | 4051 | 2800 | 21.207 | 19.891 | 7382 | 3100 | 26.340 | 24.812 | 8984 | 3723 |
| | 100 | 19.4 | 1.289 | 1.097 | 3571 | 2275 | 2.520 | 2.164 | 7043 | 2800 | 5.487 | 4.773 | 14009 | 3100 | 6.701 | 5.845 | 18412 | 3723 |
| 7 1/2 | 2500 | 333.3 | 9.053 | 8.527 | 1612 | 2275 | 16.257 | 15.425 | 2915 | 2930 | 27.783 | 26.438 | 4997 | 3245 | 34.042 | 32.456 | 6134 | 3723 |
| | **1750** | **233.3** | **7.844** | **7.317** | **1976** | **2275** | **14.063** | **13.237** | **3574** | **2930** | **24.006** | **22.687** | **6125** | **3245** | **29.390** | **27.851** | **7520** | **3723** |
| | 1170 | 156.0 | 6.642 | 6.114 | 2469 | 2275 | 11.740 | 10.923 | 4411 | 2930 | 20.409 | 19.088 | 7709 | 3245 | 24.963 | 23.433 | 9493 | 3723 |
| | 870 | 116.0 | 5.755 | 5.239 | 2845 | 2275 | 10.551 | 9.720 | 5279 | 2930 | 17.876 | 16.563 | 8995 | 3245 | 21.421 | 19.932 | 10825 | 3723 |
| | 100 | 13.3 | 1.136 | 0.949 | 4075 | 2275 | 2.098 | 1.772 | 8371 | 2930 | 4.077 | 3.455 | 16323 | 3245 | 5.314 | 4.527 | 21388 | 3723 |
| 10 | 2500 | 250.0 | 8.232 | 7.701 | 1941 | 2275 | 14.886 | 14.024 | 3534 | 3010 | 22.412 | 21.066 | 5309 | 3370 | 27.742 | 26.154 | 6591 | 3723 |
| | **1750** | **175.0** | **7.034** | **6.507** | **2343** | **2275** | **12.897** | **12.035** | **4332** | **3010** | **19.402** | **18.077** | **6508** | **3370** | **23.992** | **22.443** | **8080** | **3723** |
| | 1170 | 117.0 | 5.974 | 5.446 | 2932 | 2275 | 10.918 | 10.052 | 5413 | 3010 | 16.541 | 15.210 | 8190 | 3370 | 20.429 | 18.883 | 10168 | 3723 |
| | 870 | 87.0 | 5.050 | 4.548 | 3293 | 2275 | 9.573 | 8.715 | 6311 | 3010 | 14.554 | 13.227 | 9578 | 3370 | 17.677 | 16.161 | 11703 | 3723 |
| | 100 | 10.0 | 0.857 | 0.704 | 4437 | 2275 | 1.791 | 1.485 | 9358 | 3010 | 3.341 | 2.721 | 17142 | 3370 | 4.372 | 3.590 | 22615 | 3723 |
| 15 | 2500 | 166.7 | 6.161 | 5.603 | 2118 | 2275 | 10.691 | 9.826 | 3714 | 3190 | 16.500 | 15.131 | 5720 | 3560 | 20.307 | 18.698 | 7068 | 3723 |
| | **1750** | **116.7** | **5.277** | **4.724** | **2551** | **2275** | **9.301** | **8.432** | **4553** | **3190** | **14.338** | **12.984** | **7012** | **3560** | **17.622** | **16.045** | **8664** | **3723** |
| | 1170 | 78.0 | 4.531 | 3.971 | 3207 | 2275 | 7.916 | 7.042 | 5688 | 3190 | 12.290 | 10.925 | 8824 | 3560 | 15.081 | 13.500 | 10904 | 3723 |
| | 870 | 58.0 | 3.858 | 3.324 | 3611 | 2275 | 6.978 | 6.110 | 6637 | 3190 | 10.887 | 9.520 | 10341 | 3560 | 13.155 | 11.597 | 12597 | 3723 |
| | 100 | 6.7 | 0.682 | 0.518 | 4895 | 2275 | 1.354 | 1.044 | 9862 | 3190 | 2.556 | 1.929 | 18228 | 3560 | 3.330 | 2.538 | 23987 | 3723 |
| 20 | 2500 | 125.0 | 4.836 | 4.306 | 2170 | 2275 | 8.692 | 7.833 | 3948 | 3320 | 12.981 | 11.612 | 5852 | 3560 | 16.032 | 14.424 | 7270 | 3723 |
| | **1750** | **87.5** | **4.188** | **3.658** | **2633** | **2275** | **7.588** | **6.722** | **4840** | **3320** | **11.321** | **9.964** | **7174** | **3560** | **13.957** | **12.378** | **8912** | **3723** |
| | 1170 | 58.5 | 3.547 | 3.020 | 3253 | 2275 | 6.491 | 5.618 | 6050 | 3320 | 9.754 | 8.383 | 9028 | 3560 | 12.001 | 10.414 | 11215 | 3723 |
| | 870 | 43.5 | 3.002 | 2.505 | 3628 | 2275 | 5.686 | 4.828 | 6992 | 3320 | 8.684 | 7.310 | 10587 | 3560 | 10.536 | 8.966 | 12985 | 3723 |
| | 100 | 5.0 | 0.528 | 0.381 | 4802 | 2275 | 1.100 | 0.804 | 10136 | 3320 | 2.100 | 1.473 | 18561 | 3560 | 2.734 | 1.944 | 24498 | 3723 |
| 25 | 2500 | 100.0 | 3.977 | 3.468 | 2185 | 2275 | 7.129 | 6.308 | 3974 | 3445 | 10.712 | 9.350 | 5891 | 3560 | 13.214 | 11.616 | 7318 | 3723 |
| | **1750** | **70.0** | **3.465** | **2.953** | **2658** | **2275** | **6.242** | **5.413** | **4872** | **3445** | **9.375** | **8.024** | **7221** | **3560** | **11.540** | **9.968** | **8971** | **3723** |
| | 1170 | 46.8 | 2.914 | 2.413 | 3248 | 2275 | 5.352 | 4.518 | 6082 | 3445 | 8.117 | 6.751 | 9088 | 3560 | 9.968 | 8.387 | 11290 | 3723 |
| | 870 | 34.8 | 2.460 | 1.990 | 3603 | 2275 | 4.664 | 3.851 | 6972 | 3445 | 7.259 | 5.888 | 10660 | 3560 | 8.791 | 7.225 | 13080 | 3723 |
| | 100 | 4.0 | 0.434 | 0.298 | 4701 | 2275 | 0.899 | 0.628 | 9898 | 3445 | 1.808 | 1.184 | 18641 | 3560 | 2.348 | 1.562 | 24605 | 3723 |
| 30 | 2500 | 83.3 | 3.452 | 2.903 | 2195 | 2275 | 5.942 | 5.093 | 3850 | 3550 | 9.160 | 7.806 | 5902 | 3560 | 11.235 | 9.648 | 7294 | 3723 |
| | **1750** | **58.3** | **3.003** | **2.454** | **2651** | **2275** | **5.226** | **4.370** | **4720** | **3550** | **8.043** | **6.699** | **7235** | **3560** | **9.841** | **8.279** | **8941** | **3723** |
| | 1170 | 39.0 | 2.604 | 2.052 | 3315 | 2275 | 4.516 | 3.652 | 5899 | 3550 | 6.997 | 5.636 | 9104 | 3560 | 8.538 | 6.966 | 11252 | 3723 |
| | 870 | 29.0 | 2.238 | 1.713 | 3721 | 2275 | 4.013 | 3.157 | 6857 | 3550 | 6.282 | 4.917 | 10681 | 3560 | 7.556 | 5.999 | 13032 | 3723 |
| | 100 | 3.3 | 0.425 | 0.265 | 5007 | 2275 | 0.837 | 0.534 | 10092 | 3550 | 1.608 | 0.987 | 18653 | 3560 | 2.083 | 1.299 | 24551 | 3723 |
| 40 | 2500 | 62.5 | 2.669 | 2.157 | 2174 | 2275 | 4.752 | 3.923 | 3954 | 3715 | 7.122 | 5.793 | 5840 | 3560 | 8.756 | 7.198 | 7255 | 3723 |
| | **1750** | **43.8** | **2.348** | **1.834** | **2641** | **2275** | **4.204** | **3.366** | **4847** | **3715** | **6.292** | **4.971** | **7159** | **3560** | **7.712** | **6.176** | **8894** | **3723** |
| | 1170 | 29.3 | 2.019 | 1.509 | 3251 | 2275 | 3.659 | 2.813 | 6059 | 3715 | 5.520 | 4.183 | 9009 | 3560 | 6.744 | 5.197 | 11193 | 3723 |
| | 870 | 21.8 | 1.729 | 1.250 | 3620 | 2275 | 3.243 | 2.412 | 6986 | 3715 | 4.993 | 3.649 | 10571 | 3560 | 6.015 | 4.480 | 12977 | 3723 |
| | 100 | 2.5 | 0.330 | 0.189 | 4769 | 2275 | 0.684 | 0.399 | 10067 | 3715 | 1.342 | 0.732 | 18434 | 3560 | 1.735 | 0.966 | 24333 | 3723 |
| 50 | 2500 | 50.0 | 2.152 | 1.674 | 2110 | 2275 | 3.815 | 3.045 | 3837 | 3730 | 5.784 | 4.499 | 5669 | 3560 | 7.095 | 5.590 | 7044 | 3723 |
| | **1750** | **35.0** | **1.907** | **1.426** | **2568** | **2275** | **3.392** | **2.613** | **4704** | **3730** | **5.138** | **3.861** | **6950** | **3560** | **6.282** | **4.797** | **8635** | **3723** |
| | 1170 | 23.4 | 1.634 | 1.163 | 3130 | 2275 | 2.966 | 2.180 | 5870 | 3730 | 4.543 | 3.248 | 8746 | 3560 | 5.533 | 4.036 | 10866 | 3723 |
| | 870 | 17.4 | 1.399 | 0.958 | 3467 | 2275 | 2.620 | 1.855 | 6717 | 3730 | 4.135 | 2.834 | 10263 | 3560 | 4.966 | 3.480 | 12601 | 3723 |
| | 100 | 2.0 | 0.270 | 0.143 | 4510 | 2275 | 0.555 | 0.302 | 9497 | 3730 | 1.159 | 0.568 | 17886 | 3560 | 1.494 | 0.750 | 23609 | 3723 |
| 60 | 2500 | 41.7 | 1.764 | 1.323 | 2001 | 2275 | 3.115 | 2.407 | 3639 | 3730 | 4.777 | 3.560 | 5383 | 3570 | 5.825 | 4.400 | 6653 | 3723 |
| | **1750** | **29.2** | **1.573** | **1.128** | **2437** | **2275** | **2.696** | **2.001** | **4322** | **3730** | **4.265** | **3.055** | **6598** | **3570** | **5.181** | **3.776** | **8155** | **3723** |
| | 1170 | 19.5 | 1.346 | 0.913 | 2951 | 2275 | 2.441 | 1.719 | 5555 | 3730 | 3.797 | 2.570 | 8304 | 3570 | 4.594 | 3.177 | 10263 | 3723 |
| | 870 | 14.5 | 1.153 | 0.750 | 3258 | 2275 | 2.155 | 1.456 | 6326 | 3730 | 3.475 | 2.243 | 9744 | 3570 | 4.143 | 2.738 | 11894 | 3723 |
| | 100 | 1.7 | 0.225 | 0.111 | 4201 | 2275 | 0.460 | 0.234 | 8828 | 3730 | 1.009 | 0.449 | 16976 | 3570 | 1.298 | 0.591 | 22346 | 3723 |
| 80 | 2500 | 31.3 | 1.122 | 0.796 | 1605 | 2275 | 2.019 | 1.486 | 2995 | 3740 | 3.226 | 2.217 | 4469 | 3590 | 4.130 | 2.939 | 5926 | 3723 |
| | **1750** | **21.9** | **1.030** | **0.695** | **2000** | **2275** | **1.790** | **1.257** | **3620** | **3740** | **2.906** | **1.902** | **5478** | **3590** | **3.702** | **2.522** | **7264** | **3723** |
| | 1170 | 14.6 | 0.869 | 0.551 | 2371 | 2275 | 1.585 | 1.049 | 4519 | 3740 | 2.618 | 1.600 | 6894 | 3590 | 3.315 | 2.122 | 9142 | 3723 |
| | 870 | 10.9 | 0.740 | 0.447 | 2590 | 2275 | 1.385 | 0.875 | 5068 | 3740 | 2.419 | 1.396 | 8090 | 3590 | 3.037 | 1.843 | 10679 | 3723 |
| | 100 | 1.3 | 0.143 | 0.064 | 3246 | 2275 | 0.290 | 0.135 | 6804 | 3740 | 0.744 | 0.280 | 14089 | 3590 | 0.950 | 0.382 | 19249 | 3723 |
| 100 | 2500 | 25.0 | 0.754 | 0.503 | 1268 | 2275 | 1.341 | 0.933 | 2351 | 3750 | 2.285 | 1.504 | 3790 | 3600 | 2.849 | 1.905 | 4802 | 3723 |
| | **1750** | **17.5** | **0.691** | **0.435** | **1567** | **2275** | **1.201** | **0.792** | **2852** | **3750** | **2.072** | **1.291** | **4646** | **3600** | **2.571** | **1.635** | **5886** | **3723** |
| | 1170 | 11.7 | 0.584 | 0.343 | 1846 | 2275 | 1.062 | 0.655 | 3527 | 3750 | 1.820 | 1.052 | 5663 | 3600 | 2.323 | 1.376 | 7408 | 3723 |
| | 870 | 8.7 | 0.498 | 0.277 | 2009 | 2275 | 0.928 | 0.544 | 3937 | 3750 | 1.748 | 0.950 | 6879 | 3600 | 2.147 | 1.198 | 8674 | 3723 |
| | 100 | 1.0 | 0.097 | 0.040 | 2496 | 2275 | 0.197 | 0.083 | 5219 | 3750 | 0.515 | 0.180 | 11331 | 3600 | 0.686 | 0.244 | 15389 | 3723 |

*Note: All torque values listed in inch-pounds, all overhung load values listed in pounds. The point of application of the overhung load is considered to be one shaft diameter measured outward from the gear case housing. See page 16 for extended bearing (Styles FE, FEM & FEMQ) and input shaft overhung load (OHL) capacity. At speeds above 1750 RPM, units may become thermally limited. For extended operation, limit input HP to 1750 RPM catalog rating.*

# Single Reduction

## Worm Gear Rating Table

| Ratio | Input RPM | Output RPM | Size 2700 Input HP | Size 2700 Output HP | Size 2700 Output TQ | Size 2700 OHL | Size 2800 Input HP | Size 2800 Output HP | Size 2800 Output TQ | Size 2800 OHL | Size 21000 Input HP | Size 21000 Output HP | Size 21000 Output TQ | Size 21000 OHL |
|---|---|---|---|---|---|---|---|---|---|---|---|---|---|---|
| 5 | **1750** | **341.5** | **51.170** | **49.115** | **9062** | **6209** | **66.875** | **64.312** | **11866** | **7761** | **104.651** | **100.915** | **18619** | **11028** |
| | 1170 | 228.3 | 43.353 | 41.324 | 11404 | 6209 | 56.618 | 54.111 | 14932 | 7761 | 88.498 | 84.908 | 23431 | 11028 |
| | 870 | 169.8 | 38.427 | 36.392 | 13506 | 6209 | 50.159 | 47.652 | 17685 | 7761 | 78.334 | 74.774 | 27750 | 11028 |
| | 100 | 19.5 | 9.250 | 8.181 | 26416 | 6209 | 13.930 | 12.417 | 36447 | 7761 | 22.115 | 19.802 | 63935 | 11028 |
| 7 1/2 | **1750** | **236.5** | **41.546** | **39.684** | **10572** | **6209** | **54.370** | **52.053** | **13867** | **7761** | **84.411** | **81.109** | **21413** | **11028** |
| | 1170 | 158.1 | 35.247 | 33.389 | 13304 | 6209 | 46.092 | 43.796 | 17451 | 7761 | 71.469 | 68.243 | 26947 | 11028 |
| | 870 | 117.6 | 30.763 | 28.923 | 15499 | 6209 | 40.874 | 38.569 | 20668 | 7761 | 63.321 | 60.098 | 31914 | 11028 |
| | 100 | 13.5 | 6.968 | 6.089 | 28388 | 6209 | 9.723 | 8.536 | 39793 | 7761 | 16.549 | 14.659 | 67727 | 11028 |
| 10 | **1750** | **179.5** | **35.744** | **33.884** | **11893** | **6209** | **43.319** | **41.160** | **14447** | **7761** | **67.117** | **64.006** | **22466** | **11028** |
| | 1170 | 120.0 | 30.368 | 28.509 | 14967 | 6209 | 36.771 | 34.631 | 18181 | 7761 | 56.888 | 53.853 | 28273 | 11028 |
| | 870 | 89.2 | 26.470 | 24.631 | 17391 | 6209 | 32.648 | 30.498 | 21532 | 7761 | 50.458 | 47.425 | 33484 | 11028 |
| | 100 | 10.3 | 6.153 | 5.256 | 32282 | 6209 | 7.960 | 6.831 | 41958 | 7761 | 13.678 | 11.837 | 72712 | 11028 |
| 15 | **1750** | **119.3** | **25.978** | **24.294** | **12827** | **6209** | **33.822** | **31.753** | **16766** | **7761** | **52.789** | **49.825** | **26308** | **11028** |
| | 1170 | 79.8 | 22.136 | 20.441 | 16143 | 6209 | 28.791 | 26.716 | 21099 | 7761 | 44.862 | 41.921 | 33107 | 11028 |
| | 870 | 59.3 | 19.580 | 17.881 | 18991 | 6209 | 25.297 | 23.230 | 24672 | 7761 | 39.876 | 36.918 | 39209 | 11028 |
| | 100 | 6.8 | 4.157 | 3.436 | 31744 | 6209 | 5.747 | 6.820 | 44195 | 7761 | 9.949 | 8.365 | 77295 | 11028 |
| 20 | **1750** | **85.4** | **19.916** | **18.199** | **13431** | **6209** | **25.929** | **23.815** | **17575** | **7761** | **40.433** | **37.394** | **27597** | **11028** |
| | 1170 | 57.1 | 17.045 | 15.312 | 16903 | 6209 | 22.162 | 20.037 | 22118 | 7761 | 34.481 | 31.462 | 34730 | 11028 |
| | 870 | 42.4 | 15.130 | 13.392 | 19880 | 6209 | 19.506 | 17.390 | 25815 | 7761 | 30.748 | 27.707 | 41131 | 11028 |
| | 100 | 4.9 | 3.345 | 2.595 | 33520 | 6209 | 4.630 | 3.623 | 46792 | 7761 | 8.011 | 6.350 | 82011 | 11028 |
| 25 | **1750** | **71.4** | **16.911** | **15.264** | **13462** | **6209** | **21.937** | **19.930** | **17578** | **7761** | **34.199** | **31.313** | **27618** | **11028** |
| | 1170 | 47.8 | 14.060 | 12.444 | 16417 | 6209 | 18.791 | 16.769 | 22122 | 7761 | 29.224 | 26.346 | 34756 | 11028 |
| | 870 | 35.5 | 12.906 | 11.234 | 19931 | 6209 | 16.649 | 14.624 | 25946 | 7761 | 26.104 | 23.201 | 41163 | 11028 |
| | 100 | 4.1 | 2.821 | 2.124 | 32790 | 6209 | 3.862 | 2.943 | 45421 | 7761 | 6.703 | 5.175 | 79871 | 11028 |
| 30 | **1750** | **59.3** | **14.112** | **12.576** | **13356** | **6209** | **17.925** | **16.164** | **17166** | **7761** | **28.529** | **25.831** | **27433** | **11028** |
| | 1170 | 39.7 | 11.909 | 10.382 | 16491 | 6209 | 14.993 | 13.257 | 21058 | 7761 | 24.435 | 21.734 | 34523 | 11028 |
| | 870 | 29.5 | 10.791 | 9.234 | 19725 | 6209 | 13.674 | 11.890 | 25398 | 7761 | 21.272 | 18.617 | 39769 | 11028 |
| | 100 | 3.4 | 2.295 | 1.681 | 31233 | 6209 | 2.936 | 2.211 | 41088 | 7761 | 5.490 | 4.122 | 76598 | 11028 |
| 40 | **1750** | **43.8** | **10.880** | **9.305** | **13399** | **6209** | **14.079** | **12.158** | **17507** | **7761** | **21.818** | **19.077** | **27471** | **11028** |
| | 1170 | 29.3 | 9.178 | 7.622 | 16416 | 6209 | 12.170 | 10.229 | 22032 | 7761 | 18.795 | 16.051 | 34571 | 11028 |
| | 870 | 21.8 | 8.450 | 6.845 | 19828 | 6209 | 10.881 | 8.933 | 25875 | 7761 | 16.908 | 14.135 | 40943 | 11028 |
| | 100 | 2.5 | 1.935 | 1.278 | 32194 | 6209 | 2.644 | 1.773 | 44687 | 7761 | 4.539 | 3.105 | 78246 | 11028 |
| 50 | **1750** | **35.0** | **8.740** | **7.228** | **13011** | **6209** | **11.317** | **9.460** | **17028** | **7761** | **17.476** | **14.835** | **26703** | **11028** |
| | 1170 | 23.4 | 7.426 | 5.930 | 15966 | 6209 | 9.838 | 7.959 | 21429 | 7761 | 15.128 | 12.482 | 33605 | 11028 |
| | 870 | 17.4 | 6.857 | 5.317 | 19250 | 6209 | 8.837 | 6.951 | 25166 | 7761 | 13.204 | 10.618 | 38444 | 11028 |
| | 100 | 2.0 | 1.615 | 0.988 | 31109 | 6209 | 2.224 | 1.380 | 43469 | 7761 | 3.793 | 2.411 | 75935 | 11028 |
| 60 | **1750** | **29.2** | **7.003** | **5.657** | **12220** | **6209** | **9.048** | **7.399** | **15982** | **7761** | **13.983** | **11.624** | **25107** | **11028** |
| | 1170 | 19.5 | 6.033 | 4.687 | 15143 | 6209 | 7.629 | 6.014 | 19430 | 7761 | 12.152 | 9.780 | 31597 | 11028 |
| | 870 | 14.5 | 5.513 | 4.146 | 18014 | 6209 | 7.126 | 5.446 | 23663 | 7761 | 10.762 | 8.416 | 36566 | 11028 |
| | 100 | 1.7 | 1.273 | 0.744 | 28131 | 6209 | 1.748 | 1.038 | 39244 | 7761 | 3.013 | 1.829 | 69119 | 11028 |
| 70 | **1750** | **25.0** | **5.740** | **4.484** | **11300** | **6209** | **7.370** | **5.850** | **14743** | **7761** | **11.431** | **9.220** | **23235** | **11028** |
| | 1170 | 16.7 | 4.963 | 3.709 | 13979 | 6209 | 6.242 | 4.755 | 17921 | 7761 | 9.979 | 7.758 | 29240 | 11028 |
| | 870 | 12.4 | 4.567 | 3.290 | 16676 | 6209 | 5.854 | 4.306 | 21829 | 7761 | 8.845 | 6.655 | 33736 | 11028 |
| | 100 | 1.4 | 1.094 | 0.595 | 26222 | 6209 | 1.476 | 0.821 | 36215 | 7761 | 2.589 | 1.464 | 64584 | 11028 |

*Note: All torque values listed in inch-pounds, all overhung load values listed in pounds. The point of application of the overhung load is considered to be one shaft diameter measured outward from the gear case housing. See page 16 for extended bearing (Styles FE, FEM & FEMQ) and input shaft overhung load (OHL) capacity. At speeds above 1750 RPM, units may become thermally limited. For extended operation, limit input HP to 1750 RPM catalog rating.*

# Single Reduction

## Worm Gear Thrust & Overhung Load Ratings

*Low Speed Shaft*

### Thrust Ratings - *Single Reduction (LBS.)*

| | Unit Size | | | | | | | | | | | | | |
|---|---|---|---|---|---|---|---|---|---|---|---|---|---|---|
| **Ratios** | **213** | **215** | **218** | **220** | **224** | **226** | **230** | **232** | **242** | **252** | **2600** | **2700** | **2800** | **21000** |
| 5 | 827 | 794 | 793 | 735 | 1451 | 1420 | 1729 | 1605 | 1445 | 1675 | 3633 | 4009 | 4777 | 6808 |
| 7.5 | 948 | 946 | 868 | 811 | 1659 | 1609 | 1944 | 1869 | 1640 | 2021 | 3990 | 4009 | 4777 | 6808 |
| 10 | 1070 | 1056 | 976 | 898 | 1820 | 1762 | 2147 | 2026 | 1788 | 2449 | 3990 | 4009 | 4777 | 6808 |
| 15 | 1144 | 1144 | 1144 | 1099 | 2091 | 2069 | 2549 | 2490 | 2319 | 3033 | 3990 | 4009 | 4777 | 6808 |
| Any other Ratio | 1144 | 1144 | 1144 | 1144 | 2091 | 2091 | 2574 | 2574 | 2533 | 3412 | 3990 | 4009 | 4777 | 6808 |

### Extended Bearing Design Output Shaft Overhung Load Capacity (LBS.)

| **Unit Size** | **230** | **232** | **242** | **252** | **2600** | **2700** | **2800** | **21000** |
|---|---|---|---|---|---|---|---|---|
| O.H.L. Capacity | 605 | 959 | 1200 | 2524 | 2245 | 3791 | 4850 | 8500 |

*O.H.L. = Overhung Load*
*Note: Load located at end of output shaft*

### High Speed Shaft Overhung Load Capacity (LBS.)

| **Unit Size** | **213** | **215** | **218** | **220** | **224** | **226** | **230** | **232** | **242** | **252** | **2600** | **2700** | **2800** | **21000** |
|---|---|---|---|---|---|---|---|---|---|---|---|---|---|---|
| O.H.L. Capacity | 75 | 75 | 75 | 75 | 125 | 125 | 150 | 150 | 175 | 300 | 450 | 450 | 450 | 500 |

*O.H.L. = Overhung Load*
*Note: The point of application of the overhung load is considered to be one shaft diameter measured outward from the gear case housing.*

### Hollow Output Shaft Bore Sizes

| Fract. Size | Decimal Equiv. | KWY* | 213 | 215 | 218 | 220 | 224 | 226 | 230 | 232 | 242 | 252 | 2600 | 2700 | 2800 | 21000 |
|---|---|---|---|---|---|---|---|---|---|---|---|---|---|---|---|---|
| 5/8 | .625 | 3/16 x 3/32 | * | * | * | | | | | | | | | | | |
| 11/16 | .688 | 3/16 x 3/32 | | | * | | | | | | | | | | | |
| 3/4 | .750 | 3/16 x 3/32 | | | * | | | | | | | | | | | |
| 7/8 | .875 | 3/16 x 3/32 | | | * | | | | | | | | | | | |
| 1 | 1.000 | 1/4 x 1/8 | | | * | * | * | * | | | | | | | | |
| 1-1/8 | 1.125 | 1/4 x 1/8 | | | | * | * | * | | | | | | | | |
| 1-3/16 | 1.188 | 1/4 x 1/8 | | | | * | * | * | * | * | | | | | | |
| 1-1/4 | 1.250 | 1/4 x 1/8 | | | | * | * | * | * | * | | | | | | |
| 1-7/16 | 1.438 | 3/8 x 3/16 | | | | * | * | * | * | * | * | | | | | |
| 1-1/2 | 1.500 | 3/8 x 3/16 | | | | | | | * | * | * | | | | | |
| 1-5/8 | 1.625 | 3/8 x 3/16 | | | | | | | * | * | * | | | | | |
| 1-11/16 | 1.688 | 3/8 x 3/16 | | | | | | | * | * | * | | | | | |
| 1-3/4 | 1.750 | 3/8 x 3/16 | | | | | | | * | * | * | | | | | |
| 1-7/8 | 1.875 | 1/2 x 1/4 | | | | | | | | | * | | | | | |
| 1-15/16 | 1.938 | 1/2 x 1/4 | | | | | | | * | * | * | | | | | |
| 2 | 2.000 | 1/2 x 1/4 | | | | | | | | | * | * | * | | | |
| 2-3/16 | 2.188 | 1/2 x 1/4 | | | | | | | | | * | * | * | | | |
| 2-1/4 | 2.250 | 1/2 x 1/4 | | | | | | | | | | * | * | | | |
| 2-7/16 | 2.438 | 5/8 x 5/16 | | | | | | | | | | * | * | * | | |
| 2-1/2 | 2.500 | 5/8 x 5/16 | | | | | | | | | | * | * | * | | |
| 2-11/16 | 2.688 | 5/8 x 5/16 | | | | | | | | | | * | * | * | | |
| 2-15/16 | 2.938 | 3/4 x 3/8 | | | | | | | | | | * | * | * | | |
| 3 | 3.000 | 3/4 x 3/8 | | | | | | | | | | * | * | * | | |
| 3-3/16 | 3.188 | 3/4 x 3/8 | | | | | | | | | | * | * | | | |
| 3-7/16 | 3.438 | 7/8 x 7/16 | | | | | | | | | | * | * | * | * | * |
| 3-15/16 | 3.938 | 1 x 1/2 | | | | | | | | | | | | * | * | * |
| 4-3/16 | 4.188 | 1 x 1/2 | | | | | | | | | | | | | * | |
| 4-7/16 | 4.438 | 1 x 1/2 | | | | | | | | | | | | | * | * |
| 4-15/16 | 4.938 | 1-1/4 x 5/8 | | | | | | | | | | | | | | * |
| 5-7/16 | 5.438 | 1-1/4 x 5/8 | | | | | | | | | | | | | | * |

**Dimensions refer to driven shaft.*
*Note: Special bores are available upon request. Consult factory for information.*

# Dimension Sheet Index
# Single Reduction


| Style | Page |
|---|---|
| B,BM,BMQ | 18 - 19 |
| R,RM,RMQ | 20 - 21 |
| T,TM,TMQ | 22 - 23 |
| U,UM,UMQ | 24 - 25 |
| V*(L or H)*, V*(L or H)*M, V*(L or H)*MQ | 26 - 27 |
| J,JM,JMQ | 28 - 29 |
| F,FM,FMQ | 30 - 31 |
| C,CM,CMQ | 32 - 33 |
| H,HM,HMQ | 34 - 35 |
| FH,FHM,FHMQ | 36 - 37 |
| FE,FEM,FEMQ | 38 - 39 |


Contact factory for dimensions of styles not listed.

Note: All dimensions shown in dimension sheets are for reference only.
Contact factory for certified dimensions.

WARNING For safety, purchaser or user should provide protective guards over shaft extensions and any couplings, sheaves and belts, sprockets and chains, etc., mounted thereon.

# Single Reduction

## Worm Gear Dimensions

### Style B

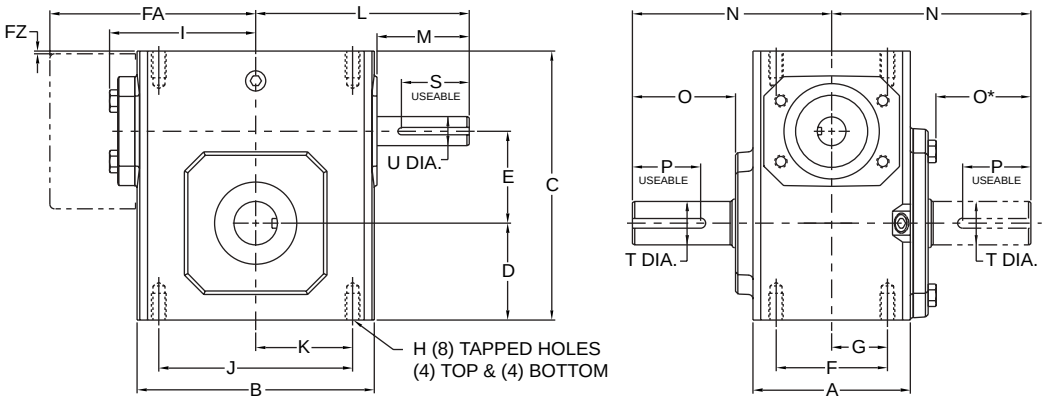


### Styles BMQ & BM

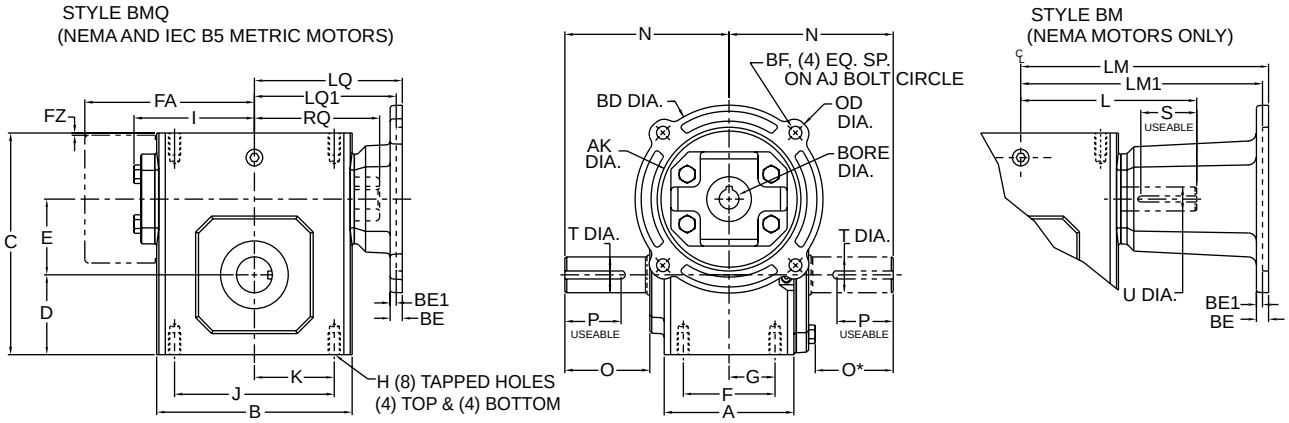


### Assemblies

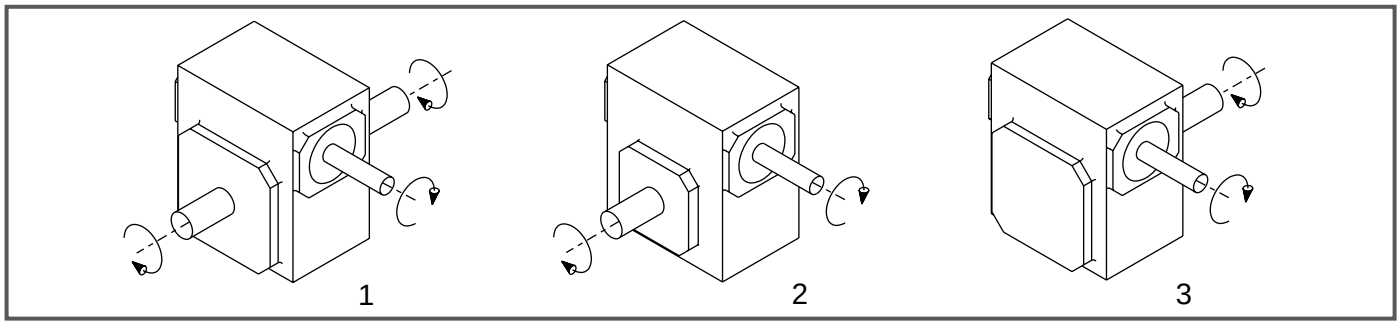


*Note: The input shaft may be rotated in either direction. Units are for mounting as shown. Contact factory for other mountings or assembly position options. Assembly positions also apply to motor flange units ("MQ" and "M").*

# Single Reduction

## Styles B, BMQ, BM

| UNIT | A | B | C | D | E | F | FA | FZ | G | H | H Depth | I | J | K | L | M | N | O | O* |
|---|---|---|---|---|---|---|---|---|---|---|---|---|---|---|---|---|---|---|---|
| 213 | 2.82 | 3.80 | 4.66 | 1.72 | 1.333 | 2.00 | N/A | N/A | 1.00 | 5/16-18 | .50 | 2.61 | 3.25 | 1.63 | 3.82 | 1.76 | 4.00 | 2.16 | 1.94 |
| 215 | 3.44 | 4.88 | 5.38 | 1.91 | 1.540 | 2.75 | N/A | N/A | 1.38 | 5/16-18 | .63 | 3.14 | 4.19 | 2.09 | 4.35 | 1.76 | 4.31 | 2.11 | 1.90 |
| 218 | 3.56 | 5.06 | 5.75 | 2.06 | 1.750 | 2.75 | N/A | N/A | 1.38 | 5/16-18 | .63 | 3.24 | 4.19 | 2.09 | 4.45 | 1.76 | 4.31 | 2.05 | 1.84 |
| 220 | 3.81 | 5.80 | 6.38 | 2.28 | 2.063 | 3.00 | N/A | N/A | 1.50 | 5/16-18 | .63 | 3.61 | 4.75 | 2.38 | 4.82 | 1.76 | 4.68 | 2.29 | 2.08 |
| 224 | 4.06 | 6.12 | 6.94 | 2.50 | 2.375 | 2.88 | N/A | N/A | 1.44 | 3/8-16 | .69 | 3.77 | 5.00 | 2.50 | 5.51 | 2.38 | 5.14 | 2.66 | 2.44 |
| 226 | 4.84 | 7.12 | 8.00 | 2.94 | 2.625 | 3.38 | N/A | N/A | 1.69 | 3/8-16 | .69 | 4.34 | 6.38 | 3.19 | 6.07 | 2.38 | 5.63 | 2.73 | 2.52 |
| 230 | 5.25 | 8.12 | 8.88 | 3.25 | 3.000 | 4.00 | N/A | N/A | 2.00 | 7/16-14 | .88 | 4.84 | 7.00 | 3.50 | 6.57 | 2.38 | 6.75 | 3.60 | 3.36 |
| 232 | 5.75 | 8.50 | 9.38 | 3.50 | 3.250 | 4.00 | N/A | N/A | 2.00 | 7/16-14 | .88 | 5.02 | 7.50 | 3.75 | 6.76 | 2.38 | 7.06 | 3.66 | 3.42 |
| 242 | 6.13 | 10.25 | 11.38 | 4.44 | 4.250 | 5.00 | N/A | N/A | 2.50 | 5/8-11 | 1.00 | 6.10 | 8.50 | 4.25 | 9.57 | 3.47 | 8.12 | 4.50 | 4.21 |
| 252 | 7.19 | 13.00 | 14.00 | 5.12 | 5.250 | 5.81 | N/A | N/A | 2.91 | 5/8-11 | 1.25 | 7.50 | 11.00 | 5.50 | 10.88 | 3.38 | 9.06 | 4.78 | 4.53 |
| 2600 | 8.13 | 14.25 | 16.50 | 6.50 | 6.000 | 6.38 | 11.13 | .33 | 3.19 | 5/8-11 | 1.00 | N/A | 12.75 | 6.38 | 11.78 | 3.41 | 10.00 | 4.65 | 4.65 |
| 2700 | 7.63 | 14.88 | 18.91 | 7.59 | 7.000 | 5.50 | 11.37 | .35 | 2.75 | 1-8 | 1.56 | N/A | 12.50 | 6.25 | 11.50 | 2.97 | 11.76 | 5.65 | 5.65 |
| 2800 | 8.63 | 17.00 | 20.96 | 8.86 | 8.000 | 6.50 | 12.52 | .57 | 3.25 | 1-8 | 1.66 | N/A | 14.25 | 7.13 | 12.50 | 2.84 | 12.25 | 5.98 | 5.98 |
| 21000 | 9.53 | 20.88 | 25.47 | 10.36 | 10.000 | 6.88 | 14.69 | .51 | 3.44 | 1 1/4-7 | 2.04 | N/A | 17.75 | 8.88 | 15.50 | 3.76 | 14.75 | 6.76 | 6.76 |

| UNIT | P** | S** | T Dia. | U Dia. |
|---|---|---|---|---|
| 213 | 3/16 x 1.50 | 1/8 x 1.44 | .625 | .500 |
| 215 | 3/16 x 1.50 | 3/16 x 1.50 | .750 | .625 |
| 218 | 3/16 x 1.38 | 3/16 x 1.50 | .875 | .625 |
| 220 | 1/4 x 1.44 | 3/16 x 1.50 | 1.000 | .625 |
| 224 | 1/4 x 1.75 | 3/16 x 1.75 | 1.125 | .750 |
| 226 | 1/4 x 2.00 | 3/16 x 1.75 | 1.250 | .750 |
| 230 | 1/4 X 2.25 | 3/16 x 1.75 | 1.250 | .875 |
| 232 | 3/8 X 2.62 | 3/16 x 1.75 | 1.500 | .875 |
| 242 | 1/2 X 3.06 | 1/4 x 2.88 | 1.875 | 1.250 |
| 252 | 1/2 x 3.50 | 1/4 x 3.00 | 2.000 | 1.250 |
| 2600 | 5/8 x 4.00 | 3/8 x 3.00 | 2.500 | 1.500 |
| 2700 | 5/8 x 4.00 | 3/8 x 2.87 | 2.750 | 1.625 |
| 2800 | 3/4 x 4.50 | 1/2 x 2.81 | 3.000 | 1.875 |
| 21000 | 7/8 x 5.00 | 1/2 x 3.69 | 3.750 | 2.250 |

**applies to double output shaft*
***keyway width by length*
****Holes rotated 45° from position shown on size 2600 "M" style "C" face with motor flange sizes 180TC-250TC.*

*Note: All dimensions listed are for reference only. Contact factory for certified dimensions.*

**WARNING** *For safety, purchaser or user should provide protective guards over shaft extensions and any couplings, sheaves and belts, sprockets and chains, etc., mounted thereon.*

## NEMA Motor Data

### NEMA Motor Mounting Dimensions

| Frame | AJ | AK | BD | OD | BE | BE1 | BORE | KWY.** | BF*** |
|---|---|---|---|---|---|---|---|---|---|
| 48CZ | 3.75 | 3.00 | 3.88 | 4.36 | .38 | N/A | .500 | 1/8 x 1/16 | .28 |
| 56C | 5.88 | 4.50 | 5.88 | 6.64 | .38 | N/A | .625 | 3/16 x 3/32 | .41 |
| 140TC | 5.88 | 4.50 | 5.88 | 6.64 | .38 | N/A | .875 | 3/16 x 3/32 | .41 |
| 180TC | 7.25 | 8.50 | 9.00 | N/A | N/A | .50 | 1.125 | 1/4 x 1/8 | .53 |
| 210TC | 7.25 | 8.50 | 9.00 | N/A | N/A | .50 | 1.375 | 5/16 x 5/32 | .53 |
| 250TC | 7.25 | 8.50 | 9.00 | N/A | N/A | .50 | 1.625 | 3/8 x 3/16 | .53 |

***keyway width by depth*

### NEMA Motor Flange Face Locations

| | 48CZ | | | 56C/140TC | | | 180TC | | | 210TC | | | 250TC | | |
|---|---|---|---|---|---|---|---|---|---|---|---|---|---|---|---|
| UNIT | LM | RQ | LQ | LM | RQ | LQ | LM1 | RQ | LQ1 | LM1 | RQ | LQ1 | LM1 | RQ | LQ1 |
| 213 | 5.63 | 3.09 | 3.46 | 6.07 | 3.09 | 3.46 | N/A | N/A | N/A | N/A | N/A | N/A | N/A | N/A | N/A |
| 215 | 6.16 | 3.62 | 3.99 | 6.60 | 3.62 | 3.99 | N/A | N/A | N/A | N/A | N/A | N/A | N/A | N/A | N/A |
| 218 | 6.26 | 3.59 | 4.09 | 6.70 | 3.59 | 4.09 | N/A | N/A | N/A | N/A | N/A | N/A | N/A | N/A | N/A |
| 220 | 6.63 | 4.06 | 4.46 | 7.07 | 4.06 | 4.46 | N/A | N/A | N/A | N/A | N/A | N/A | N/A | N/A | N/A |
| 224 | N/A | N/A | N/A | 7.76 | 4.09 | 4.63 | 8.76 | 4.56 | 5.06 | 8.76 | N/A | N/A | N/A | N/A | N/A |
| 226 | N/A | N/A | N/A | 8.32 | 4.82 | 5.19 | 9.32 | 5.13 | 5.62 | 9.32 | N/A | N/A | N/A | N/A | N/A |
| 230 | N/A | N/A | N/A | 8.82 | 5.32 | 5.69 | 9.82 | 5.63 | 6.12 | 9.82 | 6.06 | 6.56 | N/A | N/A | N/A |
| 232 | N/A | N/A | N/A | 9.01 | 5.51 | 5.88 | 10.01 | 5.81 | 6.31 | 10.01 | 6.25 | 6.75 | N/A | N/A | N/A |
| 242 | N/A | N/A | N/A | 11.81 | 6.04 | 6.45 | 12.90 | 6.68 | 7.21 | 12.90 | 6.68 | 7.21 | 13.46 | 7.24 | 7.77 |
| 252 | N/A | N/A | N/A | 13.21 | 7.35 | 7.85 | 14.30 | 7.98 | 8.61 | 14.30 | 7.98 | 8.61 | 14.86 | 8.54 | 9.17 |
| 2600 | N/A | N/A | N/A | N/A | 10.01 | 10.45 | 15.88 | 8.69 | 9.33 | 15.88 | 8.69 | 9.33 | 16.50 | 8.69 | 9.94 |
| 2700 | N/A | N/A | N/A | N/A | N/A | N/A | 15.50 | N/A | N/A | 15.50 | N/A | N/A | 15.50 | N/A | N/A |
| 2800 | N/A | N/A | N/A | N/A | N/A | N/A | N/A | N/A | N/A | 16.58 | N/A | N/A | 16.58 | N/A | N/A |

## Metric Motor Data

### IEC B5 & B3/B5 Metric Motor Flange Face Locations

| | D63D | | D71D | | D80D | | D90D | | D100LD D112MD | | D132D | |
|---|---|---|---|---|---|---|---|---|---|---|---|---|
| UNIT | LQ | RQ | LQ | RQ | LQ | RQ | LQ | RQ | LQ | RQ | LQ | RQ |
| 213 | 2.62 | 2.45 | 2.65 | 2.47 | 2.89 | 2.71 | N/A | N/A | N/A | N/A | N/A | N/A |
| 215 | 3.15 | 2.98 | 3.18 | 3.00 | 3.42 | 3.24 | N/A | N/A | N/A | N/A | N/A | N/A |
| 218 | 3.25 | 2.95 | 3.28 | 2.97 | 3.52 | 3.21 | N/A | N/A | N/A | N/A | N/A | N/A |
| 220 | 3.62 | 3.43 | 3.65 | 3.44 | 3.89 | 3.68 | N/A | N/A | N/A | N/A | N/A | N/A |
| 224 | N/A | N/A | 3.72 | 3.46 | 4.34 | 3.71 | N/A | N/A | N/A | N/A | N/A | N/A |
| 226 | N/A | N/A | 4.28 | 4.09 | 4.90 | 4.72 | 4.90 | 4.72 | 5.30 | 5.07 | N/A | N/A |
| 230 | N/A | N/A | 4.78 | 4.59 | 5.41 | 5.22 | 5.41 | 5.22 | 5.80 | 5.57 | N/A | N/A |
| 232 | N/A | N/A | 4.97 | 4.78 | 5.59 | 5.41 | 5.59 | 5.41 | 5.99 | 5.76 | N/A | N/A |
| 242 | N/A | N/A | N/A | N/A | N/A | N/A | 6.38 | 6.16 | 6.39 | 6.14 | 7.17 | 6.93 |
| 252 | N/A | N/A | N/A | N/A | N/A | N/A | 7.78 | 7.46 | 7.78 | 7.45 | 8.57 | 8.24 |

*Note: Metric motor flanges are available in quill-style (BMQ) only.*

### IEC B5 & B3/B5 Metric Motor Mounting Dimensions

*(All dimensions given in millimeters)*

| Frame | AJ | AK | BD | OD | BE | BORE | KWY.** | BF TAP |
|---|---|---|---|---|---|---|---|---|
| D63D | 115 | 95 | 117 | 131 | 10 | 11 | 4 x 2 | M8 x 1.25 |
| D71D | 130 | 110 | 132 | 146 | 11 | 14 | 5 x 2.5 | M8 x 1.25 |
| D80D | 165 | 130 | 165 | 184 | 15 | 19 | 6 x 3 | M10 x 1.50 |
| D90D | 165 | 130 | 165 | 184 | 15 | 24 | 8 x 3.5 | M10 x 1.50 |
| D100LD* | 215 | 180 | 216 | 237 | 18 | 28 | 8 x 3.5 | M12 x 1.75 |
| D132D | 265 | 230 | 267 | 290 | 18 | 38 | 10 x 4 | M12 x 1.75 |

**also applies to D112MD*
***keyway width by depth*

# Single Reduction

## Worm Gear Dimensions

### Style R

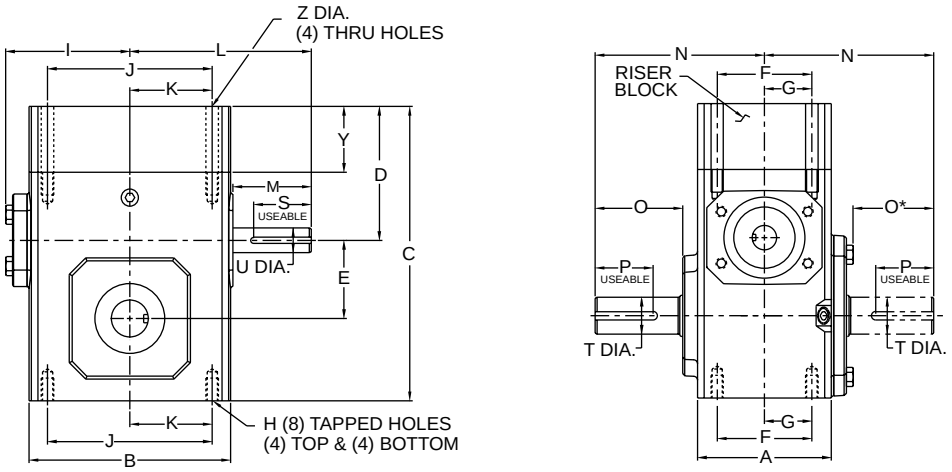


### Styles RMQ & RM

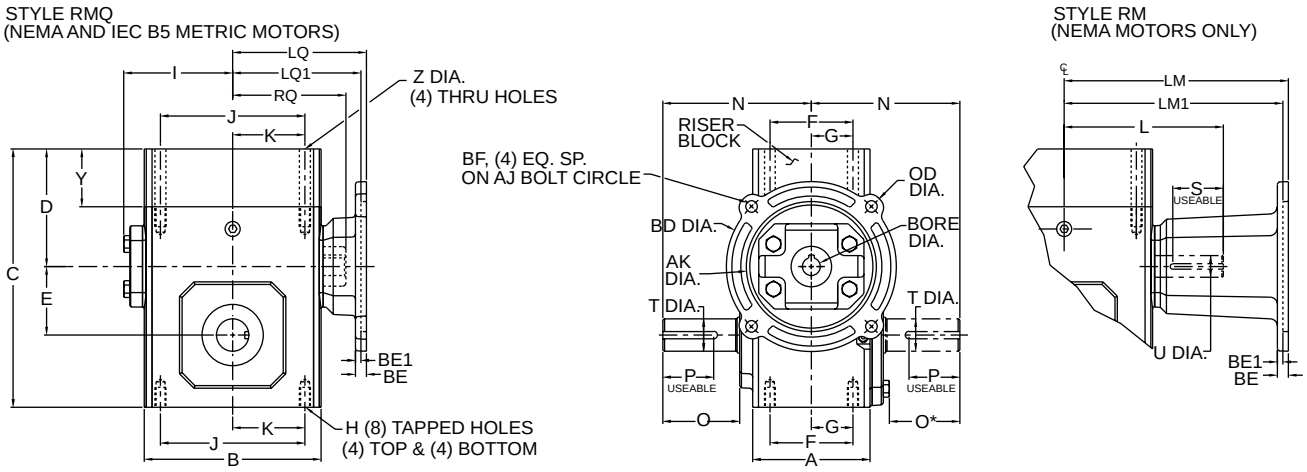


### Assemblies

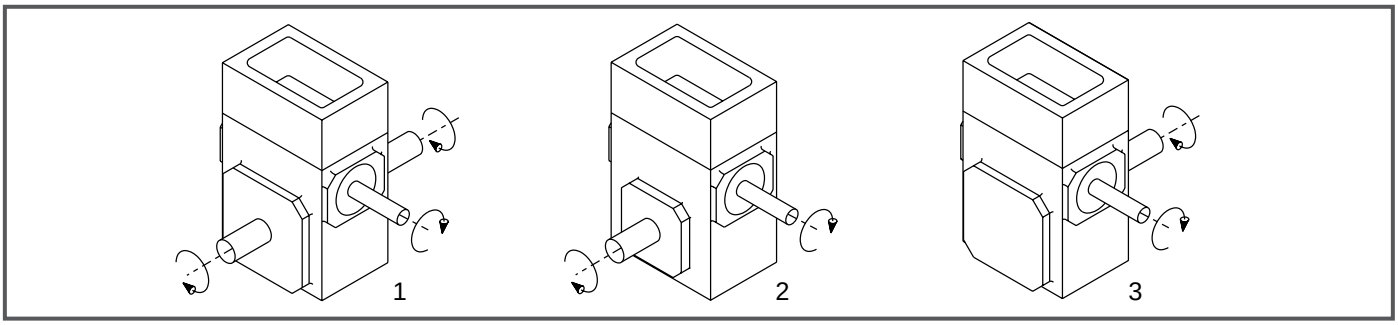


*Note: The input shaft may be rotated in either direction. Units are for mounting as shown. Contact factory for other mountings or assembly position options. Assembly positions also apply to motor flange units ("MQ" and "M").*

# Single Reduction

## Styles R, RMQ, RM

| UNIT | A | B | C | D | E | F | G | H | H Depth | I | J | K | L | M | N | O | O* | P** |
|---|---|---|---|---|---|---|---|---|---|---|---|---|---|---|---|---|---|---|
| 215 | 3.44 | 4.88 | 7.38 | 3.93 | 1.540 | 2.75 | 1.38 | 5/16-18 | .63 | 3.14 | 4.19 | 2.09 | 4.35 | 1.76 | 4.31 | 2.11 | 1.90 | 3/16 x 1.50 |
| 218 | 3.56 | 5.06 | 7.75 | 3.94 | 1.750 | 2.75 | 1.38 | 5/16-18 | .63 | 3.24 | 4.19 | 2.09 | 4.45 | 1.76 | 4.31 | 2.05 | 1.84 | 3/16 x 1.38 |
| 220 | 3.81 | 5.80 | 8.38 | 4.03 | 2.063 | 3.00 | 1.50 | 5/16-18 | .63 | 3.61 | 4.75 | 2.38 | 4.82 | 1.76 | 4.68 | 2.29 | 2.08 | 1/4 x 1.44 |
| 224 | 4.06 | 6.12 | 8.94 | 4.06 | 2.375 | 2.88 | 1.44 | 3/8-16 | .69 | 3.77 | 5.00 | 2.50 | 5.51 | 2.38 | 5.14 | 2.66 | 2.44 | 1/4 x 1.75 |
| 226 | 4.84 | 7.12 | 9.50 | 3.94 | 2.625 | 3.38 | 1.69 | 3/8-16 | .69 | 4.34 | 6.38 | 3.19 | 6.07 | 2.38 | 5.63 | 2.73 | 2.52 | 1/4 x 2.00 |
| 230 | 5.25 | 8.12 | 11.01 | 4.76 | 3.000 | 4.00 | 2.00 | 7/16-14 | .88 | 4.84 | 7.00 | 3.50 | 6.57 | 2.38 | 6.75 | 3.60 | 3.36 | 1/4 X 2.25 |
| 232 | 5.75 | 8.50 | 11.50 | 4.75 | 3.250 | 4.00 | 2.00 | 7/16-14 | .88 | 5.02 | 7.50 | 3.75 | 6.76 | 2.38 | 7.06 | 3.66 | 3.42 | 3/8 X 2.62 |
| 242 | 6.13 | 10.25 | 13.51 | 4.82 | 4.250 | 5.00 | 2.50 | 5/8-11 | 1.00 | 6.10 | 8.50 | 4.25 | 9.57 | 3.47 | 8.12 | 4.50 | 4.21 | 1/2 X 3.06 |
| 252 | 7.19 | 13.00 | 15.25 | 4.88 | 5.250 | 5.81 | 2.91 | 5/8-11 | 1.25 | 7.50 | 11.00 | 5.50 | 10.88 | 3.38 | 9.06 | 4.78 | 4.53 | 1/2 x 3.50 |

| UNIT | S** | T Dia. | U Dia. | Y | Z Dia. |
|---|---|---|---|---|---|
| 215 | 3/16 x 1.50 | .750 | .625 | 2.00 | .34 |
| 218 | 3/16 x 1.50 | .875 | .625 | 2.00 | .34 |
| 220 | 3/16 x 1.50 | 1.000 | .625 | 2.00 | .34 |
| 224 | 3/16 x 1.75 | 1.125 | .750 | 2.00 | .41 |
| 226 | 3/16 x 1.75 | 1.250 | .750 | 1.50 | .41 |
| 230 | 3/16 x 1.75 | 1.250 | .875 | 2.13 | .47 |
| 232 | 3/16 x 1.75 | 1.500 | .875 | 2.13 | .47 |
| 242 | 1/4 x 2.88 | 1.875 | 1.250 | 2.13 | .66 |
| 252 | 1/4 x 3.00 | 2.000 | 1.250 | 1.25 | .66 |

**applies to double output shaft*
***keyway width by length*
****Holes rotated 45° from positions shown on size 2600 "M" style "C" face with motor flange sizes 180TC-250TC.*

## NEMA Motor Data

### NEMA Motor Mounting Dimensions

| Frame | AJ | AK | BD | OD | BE | BE1 | BORE | KWY.** | BF*** |
|---|---|---|---|---|---|---|---|---|---|
| 48CZ | 3.75 | 3.00 | 3.88 | 4.36 | .38 | N/A | .500 | 1/8 x 1/16 | .28 |
| 56C | 5.88 | 4.50 | 5.88 | 6.64 | .38 | N/A | .625 | 3/16 x 3/32 | .41 |
| 140TC | 5.88 | 4.50 | 5.88 | 6.64 | .38 | N/A | .875 | 3/16 x 3/32 | .41 |
| 180TC | 7.25 | 8.50 | 9.00 | N/A | N/A | .50 | 1.125 | 1/4 x 1/8 | .53 |
| 210TC | 7.25 | 8.50 | 9.00 | N/A | N/A | .50 | 1.375 | 5/16 x 5/32 | .53 |
| 250TC | 7.25 | 8.50 | 9.00 | N/A | N/A | .50 | 1.625 | 3/8 x 3/16 | .53 |

***keyway width by depth*

### NEMA Motor Flange Face Locations

| | 48CZ | | | 56C/140TC | | | 180TC | | | 210TC | | | 250TC | | |
|---|---|---|---|---|---|---|---|---|---|---|---|---|---|---|---|
| UNIT | LM | RQ | LQ | LM | RQ | LQ | LM1 | RQ | LQ1 | LM1 | RQ | LQ1 | LM1 | RQ | LQ1 |
| 215 | 6.16 | 3.62 | 3.99 | 6.60 | 3.62 | 3.99 | N/A | N/A | N/A | N/A | N/A | N/A | N/A | N/A | N/A |
| 218 | 6.26 | 3.59 | 4.09 | 6.70 | 3.59 | 4.09 | N/A | N/A | N/A | N/A | N/A | N/A | N/A | N/A | N/A |
| 220 | 6.63 | 4.06 | 4.46 | 7.07 | 4.06 | 4.46 | N/A | N/A | N/A | N/A | N/A | N/A | N/A | N/A | N/A |
| 224 | N/A | N/A | N/A | 7.76 | 4.09 | 4.63 | 8.76 | 4.56 | 5.06 | 8.76 | N/A | N/A | N/A | N/A | N/A |
| 226 | N/A | N/A | N/A | 8.32 | 4.82 | 5.19 | 9.32 | 5.13 | 5.62 | 9.32 | N/A | N/A | N/A | N/A | N/A |
| 230 | N/A | N/A | N/A | 8.82 | 5.32 | 5.69 | 9.82 | 5.63 | 6.12 | 9.82 | 6.06 | 6.56 | N/A | N/A | N/A |
| 232 | N/A | N/A | N/A | 9.01 | 5.51 | 5.88 | 10.01 | 5.81 | 6.31 | 10.01 | 6.25 | 6.75 | N/A | N/A | N/A |
| 242 | N/A | N/A | N/A | 11.81 | 6.04 | 6.45 | 12.90 | 6.68 | 7.21 | 12.90 | 6.68 | 7.21 | 13.46 | 7.24 | 7.77 |
| 252 | N/A | N/A | N/A | 13.21 | 7.35 | 7.85 | 14.30 | 7.98 | 8.61 | 14.30 | 7.98 | 8.61 | 14.86 | 8.54 | 9.17 |

*Note: All dimensions listed are for reference only. Contact factory for certified dimensions.*

WARNING *For safety, purchaser or user should provide protective guards over shaft extensions and any couplings, sheaves and belts, sprockets and chains, etc., mounted thereon.*

## Metric Motor Data

### IEC B5 & B3/B5 Metric Motor Flange Face Locations

| | D63D | | D71D | | D80D | | D90D | | D100LD D112MD | | D132D | |
|---|---|---|---|---|---|---|---|---|---|---|---|---|
| UNIT | LQ | RQ | LQ | RQ | LQ | RQ | LQ | RQ | LQ | RQ | LQ | RQ |
| 215 | 3.15 | 2.98 | 3.18 | 3.00 | 3.42 | 3.24 | N/A | N/A | N/A | N/A | N/A | N/A |
| 218 | 3.25 | 2.95 | 3.28 | 2.97 | 3.52 | 3.21 | N/A | N/A | N/A | N/A | N/A | N/A |
| 220 | 3.62 | 3.43 | 3.65 | 3.44 | 3.89 | 3.68 | N/A | N/A | N/A | N/A | N/A | N/A |
| 224 | N/A | N/A | 3.72 | 3.46 | 4.34 | 3.71 | N/A | N/A | N/A | N/A | N/A | N/A |
| 226 | N/A | N/A | 4.28 | 4.09 | 4.90 | 4.72 | 4.90 | 4.72 | 5.30 | 5.07 | N/A | N/A |
| 230 | N/A | N/A | 4.78 | 4.59 | 5.41 | 5.22 | 5.41 | 5.22 | 5.80 | 5.57 | N/A | N/A |
| 232 | N/A | N/A | 4.97 | 4.78 | 5.59 | 5.41 | 5.59 | 5.41 | 5.99 | 5.76 | N/A | N/A |
| 242 | N/A | N/A | N/A | N/A | N/A | N/A | 6.38 | 6.16 | 6.39 | 6.14 | 7.17 | 6.93 |
| 252 | N/A | N/A | N/A | N/A | N/A | N/A | 7.78 | 7.46 | 7.78 | 7.45 | 8.57 | 8.24 |

*Note: Metric motor flanges are available in quill-style (RMQ) only.*

### IEC B5 & B3/B5 Metric Motor Mounting Dimensions

*(All dimensions given in millimeters)*

| Frame | AJ | AK | BD | OD | BE | BORE | KWY.** | BF TAP |
|---|---|---|---|---|---|---|---|---|
| D63D | 115 | 95 | 117 | 131 | 10 | 11 | 4 x 2 | M8 x 1.25 |
| D71D | 130 | 110 | 132 | 146 | 11 | 14 | 5 x 2.5 | M8 x 1.25 |
| D80D | 165 | 130 | 165 | 184 | 15 | 19 | 6 x 3 | M10 x 1.50 |
| D90D | 165 | 130 | 165 | 184 | 15 | 24 | 8 x 3.5 | M10 x 1.50 |
| D100LD* | 215 | 180 | 216 | 237 | 18 | 28 | 8 x 3.5 | M12 x 1.75 |
| D132D | 265 | 230 | 267 | 290 | 18 | 38 | 10 x 4 | M12 x 1.75 |

**also applies to D112MD*
***keyway width by depth*

# Single Reduction

## Worm Gear Dimensions

### Style T

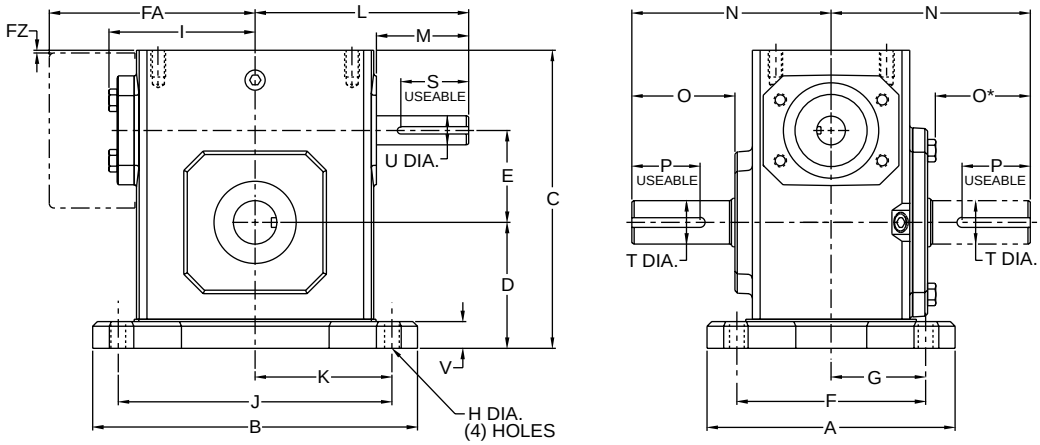


### Styles TMQ & TM

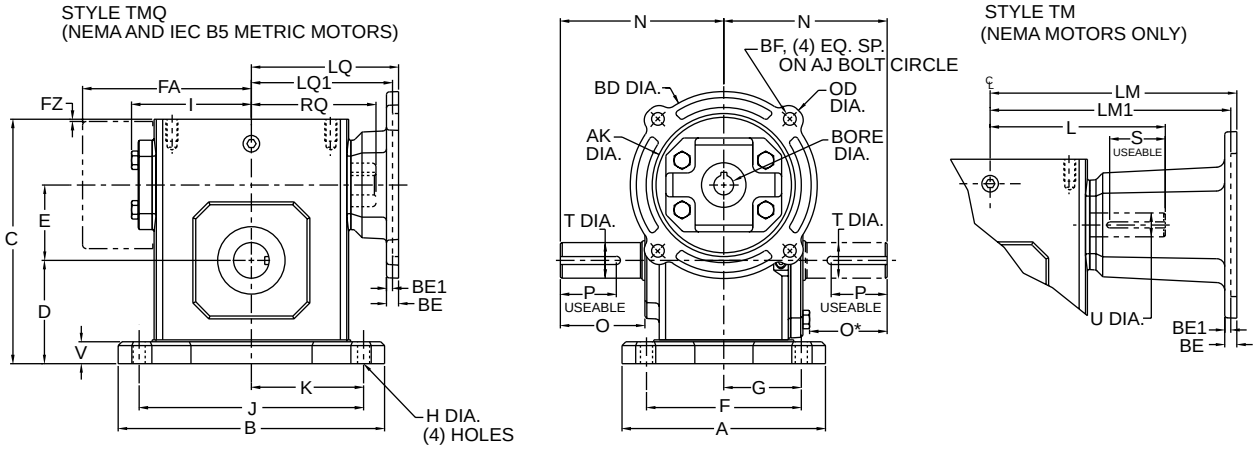


### Assemblies

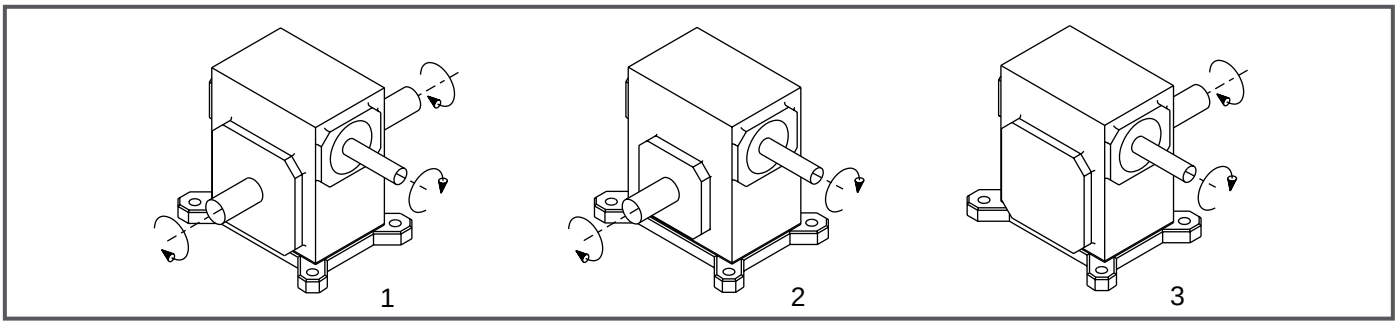


*Note: The input shaft may be rotated in either direction. Units are for mounting as shown. Contact factory for other mountings or assembly position options. Assembly positions also apply to motor flange units ("MQ" and "M").*

# Single Reduction

## Styles T, TMQ, TM

| UNIT | A | B | C | D | E | F | FA | FZ | G | H | I | J | K | L | M | N | O | O* | P** |
|---|---|---|---|---|---|---|---|---|---|---|---|---|---|---|---|---|---|---|---|
| 213 | 5.38 | 5.37 | 5.19 | 2.25 | 1.333 | 3.31 | N/A | N/A | 1.66 | .34 | 2.61 | 4.37 | 2.19 | 3.82 | 1.76 | 4.00 | 2.16 | 1.94 | 3/16 x 1.50 |
| 215 | 5.56 | 6.50 | 5.97 | 2.50 | 1.540 | 4.31 | N/A | N/A | 2.16 | .41 | 3.14 | 5.25 | 2.63 | 4.35 | 1.76 | 4.31 | 2.11 | 1.90 | 3/16 x 1.50 |
| 218 | 5.75 | 6.99 | 6.44 | 2.75 | 1.750 | 4.50 | N/A | N/A | 2.25 | .41 | 3.24 | 5.75 | 2.88 | 4.45 | 1.76 | 4.31 | 2.05 | 1.84 | 3/16 x 1.38 |
| 220 | 6.00 | 7.69 | 7.09 | 3.00 | 2.063 | 4.69 | N/A | N/A | 2.34 | .47 | 3.61 | 6.38 | 3.19 | 4.82 | 1.76 | 4.68 | 2.29 | 2.08 | 1/4 x 1.44 |
| 224 | 6.19 | 8.37 | 7.69 | 3.25 | 2.375 | 4.88 | N/A | N/A | 2.44 | .69 | 3.77 | 7.06 | 3.53 | 5.51 | 2.38 | 5.14 | 2.66 | 2.44 | 1/4 x 1.75 |
| 226 | 6.50 | 9.25 | 8.75 | 3.69 | 2.625 | 5.25 | N/A | N/A | 2.63 | .53 | 4.34 | 8.00 | 4.00 | 6.07 | 2.38 | 5.63 | 2.73 | 2.52 | 1/4 x 2.00 |
| 230 | 7.50 | 10.00 | 9.63 | 4.00 | 3.000 | 5.88 | N/A | N/A | 2.94 | .53 | 4.84 | 8.44 | 4.22 | 6.57 | 2.38 | 6.75 | 3.60 | 3.36 | 1/4 X 2.25 |
| 232 | 7.75 | 11.12 | 10.25 | 4.38 | 3.250 | 6.13 | N/A | N/A | 3.06 | .53 | 5.02 | 9.50 | 4.75 | 6.76 | 2.38 | 7.06 | 3.66 | 3.42 | 3/8 X 2.62 |
| 242 | 9.75 | 13.24 | 12.38 | 5.44 | 4.250 | 7.63 | N/A | N/A | 3.81 | .66 | 6.10 | 11.12 | 5.56 | 9.57 | 3.47 | 8.12 | 4.50 | 4.21 | 1/2 X 3.06 |
| 252 | 10.50 | 16.24 | 15.13 | 6.25 | 5.250 | 8.38 | N/A | N/A | 4.19 | .78 | 7.50 | 14.12 | 7.06 | 10.88 | 3.38 | 9.06 | 4.78 | 4.53 | 1/2 x 3.50 |
| 2600 | 12.00 | 18.99 | 17.75 | 7.75 | 6.000 | 9.50 | 11.13 | .33 | 4.75 | .91 | N/A | 16.49 | 8.25 | 11.78 | 3.41 | 10.00 | 4.65 | 4.65 | 5/8 x 4.00 |
| 2700 | 13.38 | 15.38 | 20.33 | 9.00 | 7.000 | 11.25 | 11.37 | .35 | 5.63 | 1.13 | N/A | 13.00 | 6.50 | 11.50 | 2.97 | 11.76 | 5.65 | 5.65 | 5/8 x 4.00 |
| 2800 | 13.50 | 17.37 | 22.61 | 10.50 | 8.000 | 11.50 | 12.52 | .57 | 5.75 | 1.13 | N/A | 14.75 | 7.38 | 12.50 | 2.84 | 12.25 | 5.98 | 5.98 | 3/4 x 4.50 |
| 21000 | 16.88 | 21.14 | 27.12 | 12.00 | 10.000 | 14.00 | 14.69 | .51 | 7.00 | 1.44 | N/A | 17.00 | 8.50 | 15.50 | 3.76 | 14.75 | 6.80 | 6.80 | 7/8 x 5.00 |

| UNIT | S** | T Dia. | U Dia. | V |
|---|---|---|---|---|
| 213 | 1/8 x 1.44 | .625 | .500 | .53 |
| 215 | 3/16 x 1.50 | .750 | .625 | .59 |
| 218 | 3/16 x 1.50 | .875 | .625 | .69 |
| 220 | 3/16 x 1.50 | 1.000 | .625 | .72 |
| 224 | 3/16 x 1.75 | 1.125 | .750 | .75 |
| 226 | 3/16 x 1.75 | 1.250 | .750 | .75 |
| 230 | 3/16 x 1.75 | 1.250 | .875 | .75 |
| 232 | 3/16 x 1.75 | 1.500 | .875 | .88 |
| 242 | 1/4 x 2.88 | 1.875 | 1.250 | 1.00 |
| 252 | 1/4 x 3.00 | 2.000 | 1.250 | 1.13 |
| 2600 | 3/8 x 3.00 | 2.500 | 1.500 | 1.25 |
| 2700 | 3/8 x 2.87 | 2.750 | 1.625 | 1.42 |
| 2800 | 1/2 x 2.81 | 3.000 | 1.875 | 1.65 |
| 21000 | 1/2 x 3.69 | 3.750 | 2.250 | 1.65 |

**applies to double output shaft*
***keyway width by length*
****Holes rotated 45° from positions shown on size 2600 "M" style "C" face with motor flange sizes 180TC-250TC.*

*Note: All dimensions listed are for reference only. Contact factory for certified dimensions.*

WARNING *For safety, purchaser or user should provide protective guards over shaft extensions and any couplings, sheaves and belts, sprockets and chains, etc., mounted thereon.*

## NEMA Motor Data

### NEMA Motor Mounting Dimensions

| Frame | AJ | AK | BD | OD | BE | BE1 | BORE | KWY.** | BF*** |
|---|---|---|---|---|---|---|---|---|---|
| 48CZ | 3.75 | 3.00 | 3.88 | 4.36 | .38 | N/A | .500 | 1/8 x 1/16 | .28 |
| 56C | 5.88 | 4.50 | 5.88 | 6.64 | .38 | N/A | .625 | 3/16 x 3/32 | .41 |
| 140TC | 5.88 | 4.50 | 5.88 | 6.64 | .38 | N/A | .875 | 3/16 x 3/32 | .41 |
| 180TC | 7.25 | 8.50 | 9.00 | N/A | N/A | .50 | 1.125 | 1/4 x 1/8 | .53 |
| 210TC | 7.25 | 8.50 | 9.00 | N/A | N/A | .50 | 1.375 | 5/16 x 5/32 | .53 |
| 250TC | 7.25 | 8.50 | 9.00 | N/A | N/A | .50 | 1.625 | 3/8 x 3/16 | .53 |

***keyway width by depth*

### NEMA Motor Flange Face Locations

| | 48CZ | | | 56C/140TC | | | 180TC | | | 210TC | | | 250TC | | |
|---|---|---|---|---|---|---|---|---|---|---|---|---|---|---|---|
| UNIT | LM | RQ | LQ | LM | RQ | LQ | LM1 | RQ | LQ1 | LM1 | RQ | LQ1 | LM1 | RQ | LQ1 |
| 213 | 5.63 | 3.09 | 3.46 | 6.07 | 3.09 | 3.46 | N/A | N/A | N/A | N/A | N/A | N/A | N/A | N/A | N/A |
| 215 | 6.16 | 3.62 | 3.99 | 6.60 | 3.62 | 3.99 | N/A | N/A | N/A | N/A | N/A | N/A | N/A | N/A | N/A |
| 218 | 6.26 | 3.59 | 4.09 | 6.70 | 3.59 | 4.09 | N/A | N/A | N/A | N/A | N/A | N/A | N/A | N/A | N/A |
| 220 | 6.63 | 4.06 | 4.46 | 7.07 | 4.06 | 4.46 | N/A | N/A | N/A | N/A | N/A | N/A | N/A | N/A | N/A |
| 224 | N/A | N/A | N/A | 7.76 | 4.09 | 4.63 | 8.76 | 4.56 | 5.06 | 8.76 | N/A | N/A | N/A | N/A | N/A |
| 226 | N/A | N/A | N/A | 8.32 | 4.82 | 5.19 | 9.32 | 5.13 | 5.62 | 9.32 | N/A | N/A | N/A | N/A | N/A |
| 230 | N/A | N/A | N/A | 8.82 | 5.32 | 5.69 | 9.82 | 5.63 | 6.12 | 9.82 | 6.06 | 6.56 | N/A | N/A | N/A |
| 232 | N/A | N/A | N/A | 9.01 | 5.51 | 5.88 | 10.01 | 5.81 | 6.31 | 10.01 | 6.25 | 6.75 | N/A | N/A | N/A |
| 242 | N/A | N/A | N/A | 11.81 | 6.04 | 6.45 | 12.90 | 6.68 | 7.21 | 12.90 | 6.68 | 7.21 | 13.46 | 7.24 | 7.77 |
| 252 | N/A | N/A | N/A | 13.21 | 7.35 | 7.85 | 14.30 | 7.98 | 8.61 | 14.30 | 7.98 | 8.61 | 14.86 | 8.54 | 9.17 |
| 2600 | N/A | N/A | N/A | N/A | 10.01 | 10.45 | 15.88 | 8.69 | 9.33 | 15.88 | 8.69 | 9.33 | 16.50 | 8.69 | 9.94 |
| 2700 | N/A | N/A | N/A | N/A | N/A | N/A | 15.50 | N/A | N/A | 15.50 | N/A | N/A | 15.50 | N/A | N/A |
| 2800 | N/A | N/A | N/A | N/A | N/A | N/A | N/A | N/A | N/A | 16.58 | N/A | N/A | 16.58 | N/A | N/A |

## Metric Motor Data

### IEC B5 & B3/B5 Metric Motor Flange Face Locations

| | D63D | | D71D | | D80D | | D90D | | D100LD D112MD | | D132D | |
|---|---|---|---|---|---|---|---|---|---|---|---|---|
| UNIT | LQ | RQ | LQ | RQ | LQ | RQ | LQ | RQ | LQ | RQ | LQ | RQ |
| 213 | 2.62 | 2.45 | 2.65 | 2.47 | 2.89 | 2.71 | N/A | N/A | N/A | N/A | N/A | N/A |
| 215 | 3.15 | 2.98 | 3.18 | 3.00 | 3.42 | 3.24 | N/A | N/A | N/A | N/A | N/A | N/A |
| 218 | 3.25 | 2.95 | 3.28 | 2.97 | 3.52 | 3.21 | N/A | N/A | N/A | N/A | N/A | N/A |
| 220 | 3.62 | 3.43 | 3.65 | 3.44 | 3.89 | 3.68 | N/A | N/A | N/A | N/A | N/A | N/A |
| 224 | N/A | N/A | 3.72 | 3.46 | 4.34 | 3.71 | N/A | N/A | N/A | N/A | N/A | N/A |
| 226 | N/A | N/A | 4.28 | 4.09 | 4.90 | 4.72 | 4.90 | 4.72 | 5.30 | 5.07 | N/A | N/A |
| 230 | N/A | N/A | 4.78 | 4.59 | 5.41 | 5.22 | 5.41 | 5.22 | 5.80 | 5.57 | N/A | N/A |
| 232 | N/A | N/A | 4.97 | 4.78 | 5.59 | 5.41 | 5.59 | 5.41 | 5.99 | 5.76 | N/A | N/A |
| 242 | N/A | N/A | N/A | N/A | N/A | N/A | 6.38 | 6.16 | 6.39 | 6.14 | 7.17 | 6.93 |
| 252 | N/A | N/A | N/A | N/A | N/A | N/A | 7.78 | 7.46 | 7.78 | 7.45 | 8.57 | 8.24 |

*Note: Metric motor flanges are available in quill-style (TMQ) only.*

### IEC B5 & B3/B5 Metric Motor Mounting Dimensions

*(All dimensions given in millimeters)*

| Frame | AJ | AK | BD | OD | BE | BORE | KWY.** | BF TAP |
|---|---|---|---|---|---|---|---|---|
| D63D | 115 | 95 | 117 | 131 | 10 | 11 | 4 x 2 | M8 x 1.25 |
| D71D | 130 | 110 | 132 | 146 | 11 | 14 | 5 x 2.5 | M8 x 1.25 |
| D80D | 165 | 130 | 165 | 184 | 15 | 19 | 6 x 3 | M10 x 1.50 |
| D90D | 165 | 130 | 165 | 184 | 15 | 24 | 8 x 3.5 | M10 x 1.50 |
| D100LD* | 215 | 180 | 216 | 237 | 18 | 28 | 8 x 3.5 | M12 x 1.75 |
| D132D | 265 | 230 | 267 | 290 | 18 | 38 | 10 x 4 | M12 x 1.75 |

**also applies to D112MD*
***keyway width by depth*

# Single Reduction

## Worm Gear Dimensions

### Style U

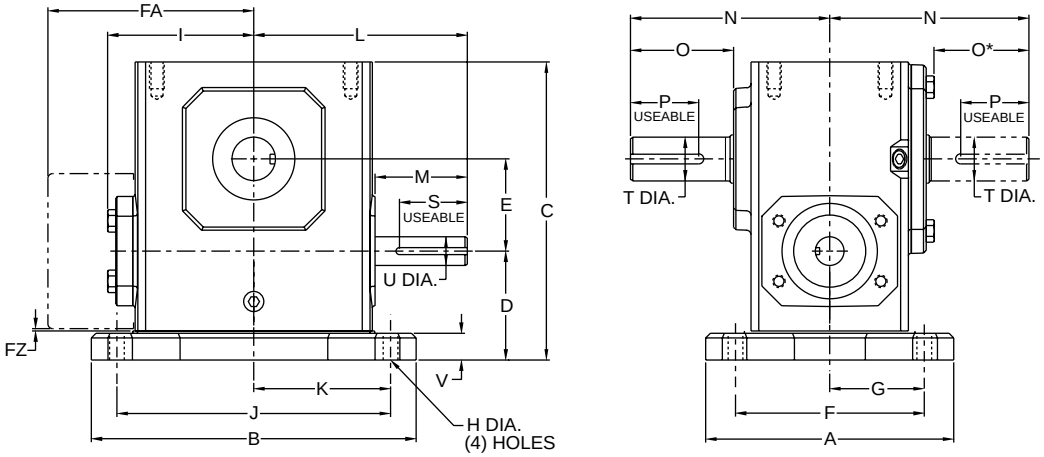


### Styles UMQ & UM

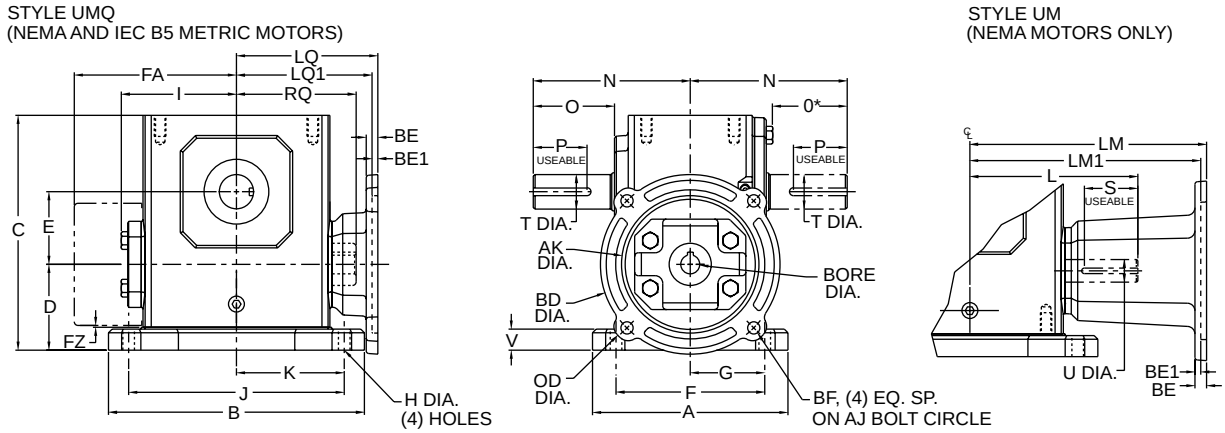


*Note: Motor flange may extend below base. Spacers between housing and base available on request.*

### Assemblies

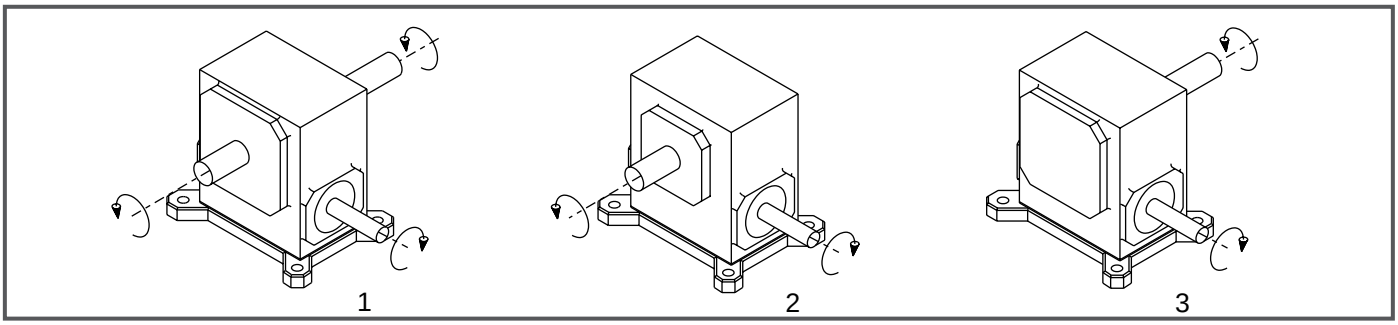


*Note: The input shaft may be rotated in either direction. Units are for mounting as shown. Contact factory for other mountings or assembly position options. Assembly positions also apply to motor flange units ("MQ" and "M").*

# Single Reduction

## Styles U, UMQ, UM

| UNIT | A | B | C | D | E | F | FA | FZ | G | H | I | J | K | L | M | N | O | O* | P** |
|---|---|---|---|---|---|---|---|---|---|---|---|---|---|---|---|---|---|---|---|
| | | | | | | 4.38 | | | 2.19 | | | | | | | | | | |
| 213 | 5.38 | 5.37 | 5.19 | 2.14 | 1.333 | 3.31 | N/A | N/A | 1.66 | .34 | 2.61 | 4.37 | 2.19 | 3.82 | 1.76 | 4.00 | 2.16 | 1.94 | 3/16 x 1.50 |
| 215 | 5.56 | 6.50 | 5.97 | 2.52 | 1.540 | 4.31 | N/A | N/A | 2.16 | .41 | 3.14 | 5.25 | 2.63 | 4.35 | 1.76 | 4.31 | 2.11 | 1.90 | 3/16 x 1.50 |
| 218 | 5.75 | 6.99 | 6.44 | 2.63 | 1.750 | 4.50 | N/A | N/A | 2.25 | .41 | 3.24 | 5.75 | 2.88 | 4.45 | 1.76 | 4.31 | 2.05 | 1.84 | 3/16 x 1.38 |
| 220 | 6.00 | 7.69 | 7.09 | 2.75 | 2.063 | 4.69 | N/A | N/A | 2.34 | .47 | 3.61 | 6.38 | 3.19 | 4.82 | 1.76 | 4.68 | 2.29 | 2.08 | 1/4 x 1.44 |
| 224 | 6.19 | 8.37 | 7.69 | 2.81 | 2.375 | 4.88 | N/A | N/A | 2.44 | .69 | 3.77 | 7.06 | 3.53 | 5.51 | 2.38 | 5.14 | 2.66 | 2.44 | 1/4 x 1.75 |
| 226 | 6.50 | 9.25 | 8.75 | 3.19 | 2.625 | 5.25 | N/A | N/A | 2.63 | .53 | 4.34 | 8.00 | 4.00 | 6.07 | 2.38 | 5.63 | 2.73 | 2.52 | 1/4 x 2.00 |
| 230 | 7.50 | 10.00 | 9.63 | 3.38 | 3.000 | 5.88 | N/A | N/A | 2.94 | .53 | 4.84 | 8.44 | 4.22 | 6.57 | 2.38 | 6.75 | 3.60 | 3.36 | 1/4 X 2.25 |
| 232 | 7.75 | 11.12 | 10.25 | 3.50 | 3.250 | 6.13 | N/A | N/A | 3.06 | .53 | 5.02 | 9.50 | 4.75 | 6.76 | 2.38 | 7.06 | 3.66 | 3.42 | 3/8 X 2.62 |
| 242 | 9.75 | 13.24 | 12.38 | 3.69 | 4.250 | 7.63 | N/A | N/A | 3.81 | .66 | 6.10 | 11.12 | 5.56 | 9.57 | 3.47 | 8.12 | 4.50 | 4.21 | 1/2 X 3.06 |
| 252 | 10.50 | 16.24 | 15.13 | 4.76 | 5.250 | 8.38 | N/A | N/A | 4.19 | .78 | 7.50 | 14.12 | 7.06 | 10.88 | 3.38 | 9.06 | 4.78 | 4.53 | 1/2 x 3.50 |
| 2600 | 12.00 | 18.99 | 17.75 | 5.25 | 6.000 | 9.50 | 11.13 | .33 | 4.75 | .91 | N/A | 16.49 | 8.25 | 11.78 | 3.41 | 10.00 | 4.65 | 4.65 | 5/8 x 4.00 |
| 2700 | 13.38 | 15.38 | 20.33 | 5.74 | 7.000 | 11.25 | 11.37 | .35 | 5.63 | 1.13 | N/A | 13.00 | 6.50 | 11.50 | 2.97 | 11.76 | 5.65 | 5.65 | 5/8 x 4.00 |
| 2800 | 13.50 | 17.37 | 22.61 | 5.75 | 8.000 | 11.50 | 12.52 | .57 | 5.75 | 1.13 | N/A | 14.75 | 7.38 | 12.50 | 2.84 | 12.25 | 5.98 | 5.98 | 3/4 x 4.50 |
| 21000 | 16.88 | 21.24 | 27.12 | 6.76 | 10.000 | 14.00 | 14.69 | .51 | 7.00 | 1.44 | N/A | 17.00 | 8.50 | 15.50 | 3.76 | 14.75 | 6.80 | 6.80 | 7/8 x 5.00 |

| UNIT | S** | T Dia. | U Dia. | V |
|---|---|---|---|---|
| 213 | 1/8 x 1.44 | .625 | .500 | .53 |
| 215 | 3/16 x 1.50 | .750 | .625 | .59 |
| 218 | 3/16 x 1.50 | .875 | .625 | .69 |
| 220 | 3/16 x 1.50 | 1.000 | .625 | .72 |
| 224 | 3/16 x 1.75 | 1.125 | .750 | .75 |
| 226 | 3/16 x 1.75 | 1.250 | .750 | .75 |
| 230 | 3/16 x 1.75 | 1.250 | .875 | .75 |
| 232 | 3/16 x 1.75 | 1.500 | .875 | .88 |
| 242 | 1/4 x 2.88 | 1.875 | 1.250 | 1.00 |
| 252 | 1/4 x 3.00 | 2.000 | 1.250 | 1.13 |
| 2600 | 3/8 x 3.00 | 2.500 | 1.500 | 1.25 |
| 2700 | 3/8 x 2.87 | 2.750 | 1.625 | 1.42 |
| 2800 | 1/2 x 2.81 | 3.000 | 1.875 | 1.65 |
| 21000 | 1/2 x 3.69 | 3.750 | 2.250 | 1.65 |

**applies to double output shaft*
***keyway width by length*
****Holes rotated 45° from positions shown on size 2600 "M" style "C" face with motor flange sizes 180TC-250TC.*

*Note: All dimensions listed are for reference only. Contact factory for certified dimensions.*

WARNING *For safety, purchaser or user should provide protective guards over shaft extensions and any couplings, sheaves and belts, sprockets and chains, etc., mounted thereon.*

## NEMA Motor Data

### NEMA Motor Mounting Dimensions

| Frame | AJ | AK | BD | OD | BE | BE1 | BORE | KWY.** | BF*** |
|---|---|---|---|---|---|---|---|---|---|
| 48CZ | 3.75 | 3.00 | 3.88 | 4.36 | .38 | N/A | .500 | 1/8 x 1/16 | .28 |
| 56C | 5.88 | 4.50 | 5.88 | 6.64 | .38 | N/A | .625 | 3/16 x 3/32 | .41 |
| 140TC | 5.88 | 4.50 | 5.88 | 6.64 | .38 | N/A | .875 | 3/16 x 3/32 | .41 |
| 180TC | 7.25 | 8.50 | 9.00 | N/A | N/A | .50 | 1.125 | 1/4 x 1/8 | .53 |
| 210TC | 7.25 | 8.50 | 9.00 | N/A | N/A | .50 | 1.375 | 5/16 x 5/32 | .53 |
| 250TC | 7.25 | 8.50 | 9.00 | N/A | N/A | .50 | 1.625 | 3/8 x 3/16 | .53 |

***keyway width by depth*

### NEMA Motor Flange Face Locations

| | 48CZ | | | 56C/140TC | | | 180TC | | | 210TC | | | 250TC | | |
|---|---|---|---|---|---|---|---|---|---|---|---|---|---|---|---|
| UNIT | LM | RQ | LQ | LM | RQ | LQ | LM1 | RQ | LQ1 | LM1 | RQ | LQ1 | LM1 | RQ | LQ1 |
| 213 | 5.63 | 3.09 | 3.46 | 6.07 | 3.09 | 3.46 | N/A | N/A | N/A | N/A | N/A | N/A | N/A | N/A | N/A |
| 215 | 6.16 | 3.62 | 3.99 | 6.60 | 3.62 | 3.99 | N/A | N/A | N/A | N/A | N/A | N/A | N/A | N/A | N/A |
| 218 | 6.26 | 3.59 | 4.09 | 6.70 | 3.59 | 4.09 | N/A | N/A | N/A | N/A | N/A | N/A | N/A | N/A | N/A |
| 220 | 6.63 | 4.06 | 4.46 | 7.07 | 4.06 | 4.46 | N/A | N/A | N/A | N/A | N/A | N/A | N/A | N/A | N/A |
| 224 | N/A | N/A | N/A | 7.76 | 4.09 | 4.63 | 8.76 | 4.56 | 5.06 | 8.76 | N/A | N/A | N/A | N/A | N/A |
| 226 | N/A | N/A | N/A | 8.32 | 4.82 | 5.19 | 9.32 | 5.13 | 5.62 | 9.32 | N/A | N/A | N/A | N/A | N/A |
| 230 | N/A | N/A | N/A | 8.82 | 5.32 | 5.69 | 9.82 | 5.63 | 6.12 | 9.82 | 6.06 | 6.56 | N/A | N/A | N/A |
| 232 | N/A | N/A | N/A | 9.01 | 5.51 | 5.88 | 10.01 | 5.81 | 6.31 | 10.01 | 6.25 | 6.75 | N/A | N/A | N/A |
| 242 | N/A | N/A | N/A | 11.81 | 6.04 | 6.45 | 12.90 | 6.68 | 7.21 | 12.90 | 6.68 | 7.21 | 13.46 | 7.24 | 7.77 |
| 252 | N/A | N/A | N/A | 13.21 | 7.35 | 7.85 | 14.30 | 7.98 | 8.61 | 14.30 | 7.98 | 8.61 | 14.86 | 8.54 | 9.17 |
| 2600 | N/A | N/A | N/A | N/A | 10.01 | 10.45 | 15.88 | 8.69 | 9.33 | 15.88 | 8.69 | 9.33 | 16.50 | 8.69 | 9.94 |
| 2700 | N/A | N/A | N/A | N/A | N/A | N/A | 15.50 | N/A | N/A | 15.50 | N/A | N/A | 15.50 | N/A | N/A |
| 2800 | N/A | N/A | N/A | N/A | N/A | N/A | N/A | N/A | N/A | 16.58 | N/A | N/A | 16.58 | N/A | N/A |

## Metric Motor Data

### IEC B5 & B3/B5 Metric Motor Flange Face Locations

| | D63D | | D71D | | D80D | | D90D | | D100LD D112MD | | D132D | |
|---|---|---|---|---|---|---|---|---|---|---|---|---|
| UNIT | LQ | RQ | LQ | RQ | LQ | RQ | LQ | RQ | LQ | RQ | LQ | RQ |
| 213 | 2.62 | 2.45 | 2.65 | 2.47 | 2.89 | 2.71 | N/A | N/A | N/A | N/A | N/A | N/A |
| 215 | 3.15 | 2.98 | 3.18 | 3.00 | 3.42 | 3.24 | N/A | N/A | N/A | N/A | N/A | N/A |
| 218 | 3.25 | 2.95 | 3.28 | 2.97 | 3.52 | 3.21 | N/A | N/A | N/A | N/A | N/A | N/A |
| 220 | 3.62 | 3.43 | 3.65 | 3.44 | 3.89 | 3.68 | N/A | N/A | N/A | N/A | N/A | N/A |
| 224 | N/A | N/A | 3.72 | 3.46 | 4.34 | 3.71 | N/A | N/A | N/A | N/A | N/A | N/A |
| 226 | N/A | N/A | 4.28 | 4.09 | 4.90 | 4.72 | 4.90 | 4.72 | 5.30 | 5.07 | N/A | N/A |
| 230 | N/A | N/A | 4.78 | 4.59 | 5.41 | 5.22 | 5.41 | 5.22 | 5.80 | 5.57 | N/A | N/A |
| 232 | N/A | N/A | 4.97 | 4.78 | 5.59 | 5.41 | 5.59 | 5.41 | 5.99 | 5.76 | N/A | N/A |
| 242 | N/A | N/A | N/A | N/A | N/A | N/A | 6.38 | 6.16 | 6.39 | 6.14 | 7.17 | 6.93 |
| 252 | N/A | N/A | N/A | N/A | N/A | N/A | 7.78 | 7.46 | 7.78 | 7.45 | 8.57 | 8.24 |

*Note: Metric motor flanges are available in quill-style (UMQ) only.*

### IEC B5 & B3/B5 Metric Motor Mounting Dimensions

*(All dimensions given in millimeters)*

| Frame | AJ | AK | BD | OD | BE | BORE | KWY.** | BF TAP |
|---|---|---|---|---|---|---|---|---|
| D63D | 115 | 95 | 117 | 131 | 10 | 11 | 4 x 2 | M8 x 1.25 |
| D71D | 130 | 110 | 132 | 146 | 11 | 14 | 5 x 2.5 | M8 x 1.25 |
| D80D | 165 | 130 | 165 | 184 | 15 | 19 | 6 x 3 | M10 x 1.50 |
| D90D | 165 | 130 | 165 | 184 | 15 | 24 | 8 x 3.5 | M10 x 1.50 |
| D100LD* | 215 | 180 | 216 | 237 | 18 | 28 | 8 x 3.5 | M12 x 1.75 |
| D132D | 265 | 230 | 267 | 290 | 18 | 38 | 10 x 4 | M12 x 1.75 |

**also applies to D112MD*
***keyway width by depth*

# Single Reduction

## Worm Gear Dimensions

### Style V*(L or H)*

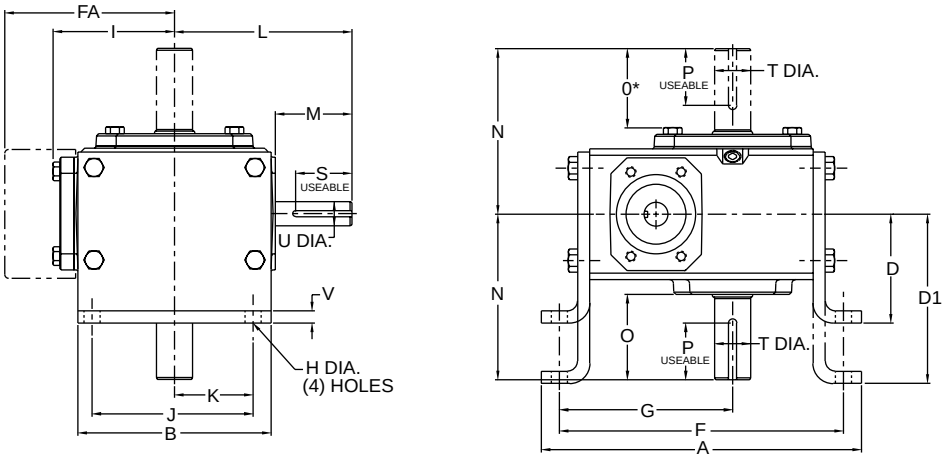


### Styles V*(L or H)*MQ & V*(L or H)*M

STYLE V(L or H)MQ
(NEMA AND IEC B5 METRIC MOTORS)

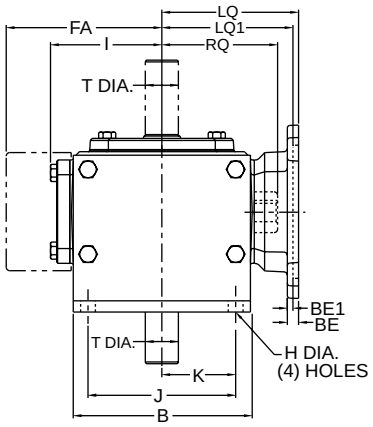


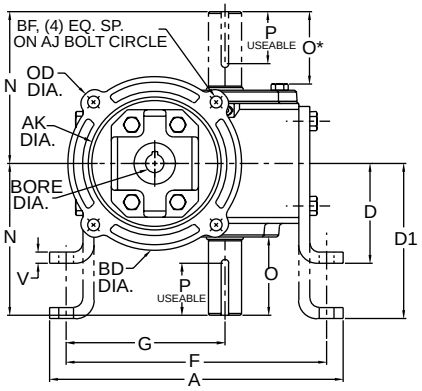


STYLE V(L or H)M
(NEMA MOTORS ONLY)

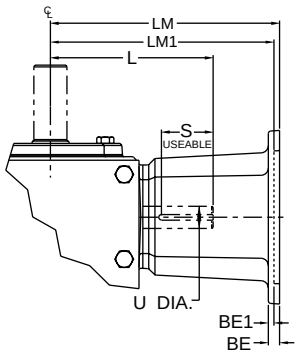


### Assemblies

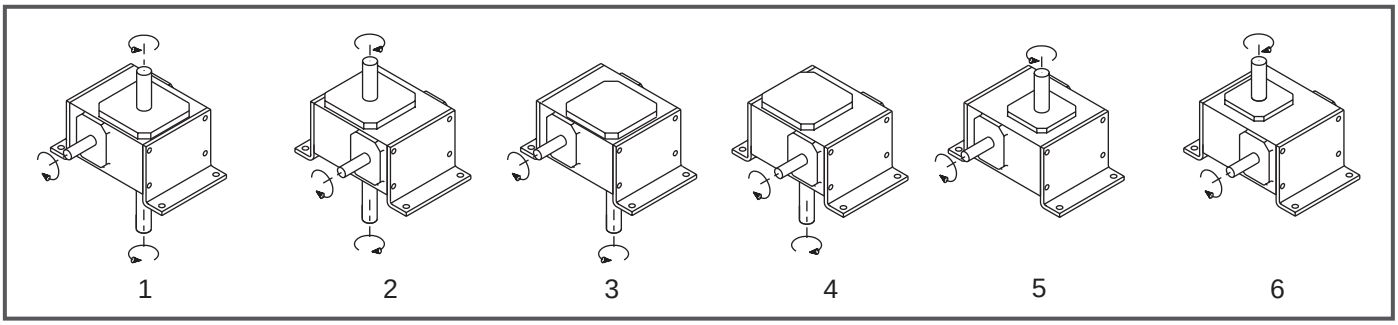


*Note: The input shaft may be rotated in either direction. Units are for mounting as shown. Contact factory for other mountings or assembly position options. Assembly positions also apply to motor flange units ("MQ" and "M").*

# Single Reduction

## Styles V(*L or H*), V(*L or H*)MQ, V(*L or H*)M

| UNIT | A | B | D | D1 | F | FA | G | H | I | J | K | L | M | N | O | O* | P** |
|---|---|---|---|---|---|---|---|---|---|---|---|---|---|---|---|---|---|
| 213 | 7.26 | 4.00 | 2.63 | 3.56 | 6.50 | N/A | 3.86 | .38 | 2.61 | 3.00 | 1.50 | 3.82 | 1.76 | 4.00 | 2.16 | 1.94 | 3/16 x 1.50 |
| 215 | 7.88 | 5.00 | 3.00 | 4.38 | 7.00 | N/A | 4.28 | .44 | 3.14 | 4.00 | 2.00 | 4.35 | 1.76 | 4.31 | 2.11 | 1.90 | 3/16 x 1.50 |
| 218 | 8.25 | 5.00 | 3.00 | 4.38 | 7.37 | N/A | 4.50 | .44 | 3.24 | 4.00 | 2.00 | 4.45 | 1.76 | 4.31 | 2.05 | 1.84 | 3/16 x 1.38 |
| 220 | 9.38 | 6.00 | 3.13 | 4.88 | 8.38 | N/A | 5.09 | .50 | 3.61 | 4.88 | 2.44 | 4.82 | 1.76 | 4.68 | 2.29 | 2.08 | 1/4 x 1.44 |
| 224 | 9.94 | 6.00 | 3.38 | 5.25 | 8.81 | N/A | 5.38 | .69 | 3.77 | 4.88 | 2.44 | 5.51 | 2.38 | 5.14 | 2.66 | 2.44 | 1/4 x 1.75 |
| 226 | 11.24 | 7.00 | 3.63 | 5.56 | 10.12 | N/A | 6.12 | .56 | 4.34 | 5.75 | 2.88 | 6.07 | 2.38 | 5.63 | 2.73 | 2.52 | 1/4 x 2.00 |
| 230 | 12.50 | 8.00 | 3.94 | 5.88 | 11.13 | N/A | 6.75 | .56 | 4.84 | 6.00 | 3.00 | 6.57 | 2.38 | 6.75 | 3.60 | 3.36 | 1/4 X 2.25 |
| 232 | 13.00 | 8.50 | 4.69 | 6.25 | 11.88 | N/A | 7.13 | .56 | 5.02 | 6.13 | 3.06 | 6.76 | 2.38 | 7.06 | 3.66 | 3.42 | 3/8 X 2.62 |
| 242 | 16.26 | 10.00 | 5.00 | 7.50 | 14.88 | N/A | 8.69 | .69 | 6.10 | 7.88 | 3.94 | 9.57 | 3.47 | 8.12 | 4.50 | 4.21 | 1/2 X 3.06 |
| 252 | 19.62 | 13.00 | 5.16 | 9.16 | 18.00 | N/A | 10.88 | .78 | 7.50 | 10.00 | 5.00 | 10.88 | 3.38 | 9.06 | 4.78 | 4.53 | 1/2 x 3.50 |
| 2600 | 23.26 | 14.75 | 7.31 | 9.63 | 20.88 | 11.13 | 12.19 | .91 | N/A | 11.76 | 5.88 | 11.78 | 3.41 | 10.00 | 4.66 | 4.66 | 5/8 x 4.00 |
| 2700 | 26.91 | 14.88 | 7.00 | N/A | 23.99 | 11.37 | 13.87 | 1.13 | N/A | 12.50 | 6.25 | 11.50 | 2.97 | 11.76 | 5.69 | 5.69 | 5/8 x 4.00 |
| 2800 | 28.96 | 17.00 | 8.00 | N/A | 25.50 | 12.52 | 14.38 | 1.13 | N/A | 14.00 | 7.00 | 12.50 | 2.84 | 12.25 | 6.02 | 6.02 | 3/4 x 4.50 |
| 21000 | 37.47 | 20.88 | 9.00 | N/A | 30.75 | 14.69 | 17.76 | 1.44 | N/A | 17.75 | 8.88 | 15.50 | 3.76 | 14.75 | 6.80 | 6.80 | 7/8 x 5.00 |

| UNIT | S** | T Dia. | U Dia. | V |
|---|---|---|---|---|
| 213 | 1/8 x 1.44 | .625 | .500 | .25 |
| 215 | 3/16 x 1.50 | .750 | .625 | .25 |
| 218 | 3/16 x 1.50 | .875 | .625 | .25 |
| 220 | 3/16 x 1.50 | 1.000 | .625 | .38 |
| 224 | 3/16 x 1.75 | 1.125 | .750 | .38 |
| 226 | 3/16 x 1.75 | 1.250 | .750 | .38 |
| 230 | 3/16 x 1.75 | 1.250 | .875 | .38 |
| 232 | 3/16 x 1.75 | 1.500 | .875 | .38 |
| 242 | 1/4 x 2.88 | 1.875 | 1.250 | .50 |
| 252 | 1/4 x 3.00 | 2.000 | 1.250 | .50 |
| 2600 | 3/8 x 3.00 | 2.500 | 1.500 | .50 |
| 2700 | 3/8 x 2.87 | 2.750 | 1.625 | .75 |
| 2800 | 1/2 x 2.81 | 3.000 | 1.875 | .75 |
| 21000 | 1/2 x 3.69 | 3.750 | 2.250 | 1.00 |

**applies to double output shaft - all sizes, and single output shaft - sizes 242 and larger*
***keyway width by length*
****Holes rotated 45° from positions shown on size 2600 "M" style "C" face with motor flange sizes 180TC-250TC.*

*Note: All dimensions listed are for reference only. Contact factory for certified dimensions.*

WARNING *For safety, purchaser or user should provide protective guards over shaft extensions and any couplings, sheaves and belts, sprockets and chains, etc., mounted thereon.*

## NEMA Motor Data

### NEMA Motor Mounting Dimensions

| Frame | AJ | AK | BD | OD | BE | BE1 | BORE | KWY.** | BF*** |
|---|---|---|---|---|---|---|---|---|---|
| 48CZ | 3.75 | 3.00 | 3.88 | 4.36 | .38 | N/A | .500 | 1/8 x 1/16 | .28 |
| 56C | 5.88 | 4.50 | 5.88 | 6.64 | .38 | N/A | .625 | 3/16 x 3/32 | .41 |
| 140TC | 5.88 | 4.50 | 5.88 | 6.64 | .38 | N/A | .875 | 3/16 x 3/32 | .41 |
| 180TC | 7.25 | 8.50 | 9.00 | N/A | N/A | .50 | 1.125 | 1/4 x 1/8 | .53 |
| 210TC | 7.25 | 8.50 | 9.00 | N/A | N/A | .50 | 1.375 | 5/16 x 5/32 | .53 |
| 250TC | 7.25 | 8.50 | 9.00 | N/A | N/A | .50 | 1.625 | 3/8 x 3/16 | .53 |

***keyway width by depth*

### NEMA Motor Flange Face Locations

| | 48CZ | | | 56C/140TC | | | 180TC | | | 210TC | | | 250TC | | |
|---|---|---|---|---|---|---|---|---|---|---|---|---|---|---|---|
| UNIT | LM | RQ | LQ | LM | RQ | LQ | LM1 | RQ | LQ1 | LM1 | RQ | LQ1 | LM1 | RQ | LQ1 |
| 213 | 5.63 | 3.09 | 3.46 | 6.07 | 3.09 | 3.46 | N/A | N/A | N/A | N/A | N/A | N/A | N/A | N/A | N/A |
| 215 | 6.16 | 3.62 | 3.99 | 6.60 | 3.62 | 3.99 | N/A | N/A | N/A | N/A | N/A | N/A | N/A | N/A | N/A |
| 218 | 6.26 | 3.59 | 4.09 | 6.70 | 3.59 | 4.09 | N/A | N/A | N/A | N/A | N/A | N/A | N/A | N/A | N/A |
| 220 | 6.63 | 4.06 | 4.46 | 7.07 | 4.06 | 4.46 | N/A | N/A | N/A | N/A | N/A | N/A | N/A | N/A | N/A |
| 224 | N/A | N/A | N/A | 7.76 | 4.09 | 4.63 | 8.76 | 4.56 | 5.06 | 8.76 | N/A | N/A | N/A | N/A | N/A |
| 226 | N/A | N/A | N/A | 8.32 | 4.82 | 5.19 | 9.32 | 5.13 | 5.62 | 9.32 | N/A | N/A | N/A | N/A | N/A |
| 230 | N/A | N/A | N/A | 8.82 | 5.32 | 5.69 | 9.82 | 5.63 | 6.12 | 9.82 | 6.06 | 6.56 | N/A | N/A | N/A |
| 232 | N/A | N/A | N/A | 9.01 | 5.51 | 5.88 | 10.01 | 5.81 | 6.31 | 10.01 | 6.25 | 6.75 | N/A | N/A | N/A |
| 242 | N/A | N/A | N/A | 11.81 | 6.04 | 6.45 | 12.90 | 6.68 | 7.21 | 12.90 | 6.68 | 7.21 | 13.46 | 7.24 | 7.77 |
| 252 | N/A | N/A | N/A | 13.21 | 7.35 | 7.85 | 14.30 | 7.98 | 8.61 | 14.30 | 7.98 | 8.61 | 14.86 | 8.54 | 9.17 |
| 2600 | N/A | N/A | N/A | N/A | 10.01 | 10.45 | 15.88 | 8.69 | 9.33 | 15.88 | 8.69 | 9.33 | 16.50 | 8.69 | 9.94 |
| 2700 | N/A | N/A | N/A | N/A | N/A | N/A | 15.50 | N/A | N/A | 15.50 | N/A | N/A | 15.50 | N/A | N/A |
| 2800 | N/A | N/A | N/A | N/A | N/A | N/A | N/A | N/A | N/A | 16.58 | N/A | N/A | 16.58 | N/A | N/A |

## Metric Motor Data

### IEC B5 & B3/B5 Metric Motor Flange Face Locations

| | D63D | | D71D | | D80D | | D90D | | D100LD D112MD | | D132D | |
|---|---|---|---|---|---|---|---|---|---|---|---|---|
| UNIT | LQ | RQ | LQ | RQ | LQ | RQ | LQ | RQ | LQ | RQ | LQ | RQ |
| 213 | 2.62 | 2.45 | 2.65 | 2.47 | 2.89 | 2.71 | N/A | N/A | N/A | N/A | N/A | N/A |
| 215 | 3.15 | 2.98 | 3.18 | 3.00 | 3.42 | 3.24 | N/A | N/A | N/A | N/A | N/A | N/A |
| 218 | 3.25 | 2.95 | 3.28 | 2.97 | 3.52 | 3.21 | N/A | N/A | N/A | N/A | N/A | N/A |
| 220 | 3.62 | 3.43 | 3.65 | 3.44 | 3.89 | 3.68 | N/A | N/A | N/A | N/A | N/A | N/A |
| 224 | N/A | N/A | 3.72 | 3.46 | 4.34 | 3.71 | N/A | N/A | N/A | N/A | N/A | N/A |
| 226 | N/A | N/A | 4.28 | 4.09 | 4.90 | 4.72 | 4.90 | 4.72 | 5.30 | 5.07 | N/A | N/A |
| 230 | N/A | N/A | 4.78 | 4.59 | 5.41 | 5.22 | 5.41 | 5.22 | 5.80 | 5.57 | N/A | N/A |
| 232 | N/A | N/A | 4.97 | 4.78 | 5.59 | 5.41 | 5.59 | 5.41 | 5.99 | 5.76 | N/A | N/A |
| 242 | N/A | N/A | N/A | N/A | N/A | N/A | 6.38 | 6.16 | 6.39 | 6.14 | 7.17 | 6.93 |
| 252 | N/A | N/A | N/A | N/A | N/A | N/A | 7.78 | 7.46 | 7.78 | 7.45 | 8.57 | 8.24 |

*Note: Metric motor flanges are available in quill-style (VMQ) only.*

### IEC B5 & B3/B5 Metric Motor Mounting Dimensions

*(All dimensions given in millimeters)*

| Frame | AJ | AK | BD | OD | BE | BORE | KWY.** | BF TAP |
|---|---|---|---|---|---|---|---|---|
| D63D | 115 | 95 | 117 | 131 | 10 | 11 | 4 x 2 | M8 x 1.25 |
| D71D | 130 | 110 | 132 | 146 | 11 | 14 | 5 x 2.5 | M8 x 1.25 |
| D80D | 165 | 130 | 165 | 184 | 15 | 19 | 6 x 3 | M10 x 1.50 |
| D90D | 165 | 130 | 165 | 184 | 15 | 24 | 8 x 3.5 | M10 x 1.50 |
| D100LD* | 215 | 180 | 216 | 237 | 18 | 28 | 8 x 3.5 | M12 x 1.75 |
| D132D | 265 | 230 | 267 | 290 | 18 | 38 | 10 x 4 | M12 x 1.75 |

**also applies to D112MD*
***keyway width by depth*

# Single Reduction

## Worm Gear Dimensions

### Style J

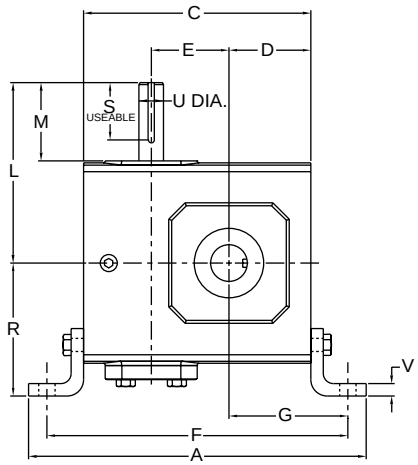


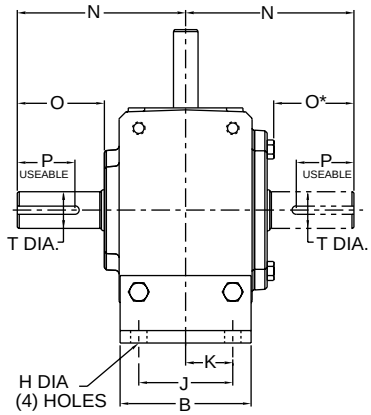


### Styles JMQ & JM

STYLE JMQ
(NEMA AND IEC B5 METRIC MOTORS)

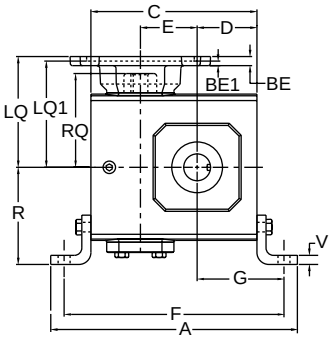


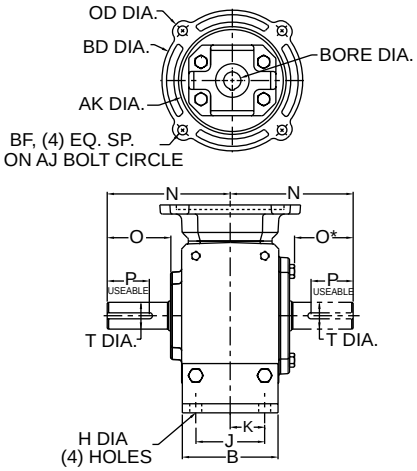


STYLE JM
(NEMA MOTORS ONLY)

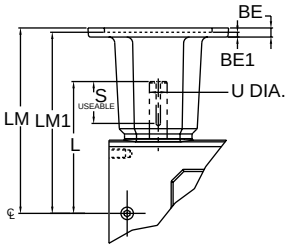


### Assemblies

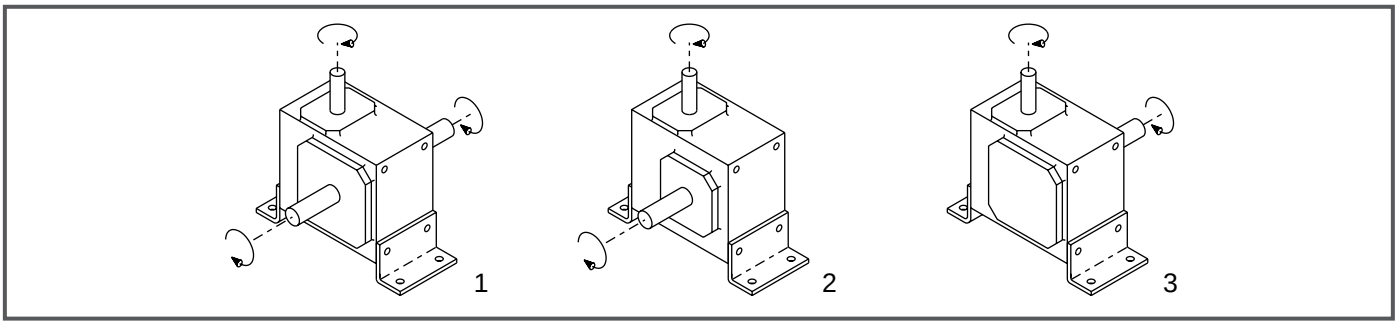


*Note: The input shaft may be rotated in either direction. Units are for mounting as shown. Contact factory for other mountings or assembly position options. Assembly positions also apply to motor flange units ("MQ" and "M").*

# Single Reduction

## Styles J, JMQ, JM

| UNIT | A | B | C | D | E | F | G | H Dia. | J | K | L | M | N | O | O* |
|---|---|---|---|---|---|---|---|---|---|---|---|---|---|---|---|
| 213 | 7.42 | 2.75 | 4.66 | 1.72 | 1.333 | 6.42 | 2.60 | .38 | 2.00 | 1.00 | 3.82 | 1.76 | 4.00 | 2.16 | 1.94 |
| 215 | 8.14 | 3.50 | 5.38 | 1.91 | 1.540 | 7.08 | 2.76 | .44 | 2.75 | 1.38 | 4.35 | 1.76 | 4.31 | 2.11 | 1.90 |
| 218 | 8.51 | 3.50 | 5.75 | 2.06 | 1.750 | 7.45 | 2.91 | .44 | 2.75 | 1.38 | 4.45 | 1.76 | 4.31 | 2.05 | 1.84 |
| 220 | 9.76 | 4.00 | 6.38 | 2.28 | 2.063 | 8.62 | 3.40 | .50 | 2.75 | 1.38 | 4.82 | 1.76 | 4.68 | 2.29 | 2.08 |
| 224 | 10.31 | 4.00 | 6.94 | 2.50 | 2.375 | 9.19 | 3.63 | .69 | 2.88 | 1.44 | 5.51 | 2.38 | 5.14 | 2.66 | 2.44 |
| 226 | 11.62 | 5.00 | 8.00 | 2.94 | 2.625 | 10.38 | 4.13 | .56 | 3.38 | 1.69 | 6.07 | 2.38 | 5.63 | 2.73 | 2.52 |
| 230 | 12.64 | 6.00 | 8.88 | 3.25 | 3.000 | 11.38 | 4.50 | .56 | 3.88 | 1.94 | 6.57 | 2.38 | 6.75 | 3.60 | 3.36 |
| 232 | 13.14 | 6.00 | 9.38 | 3.50 | 3.250 | 11.88 | 4.75 | .56 | 3.88 | 1.94 | 6.76 | 2.38 | 7.06 | 3.66 | 3.42 |
| 242 | 16.38 | 7.00 | 11.38 | 4.44 | 4.250 | 14.88 | 6.19 | .69 | 5.00 | 2.50 | 9.57 | 3.47 | 8.12 | 4.50 | 4.21 |
| 252 | 19.00 | 7.00 | 14.00 | 5.12 | 5.250 | 17.50 | 6.87 | .69 | 5.81 | 2.91 | 10.88 | 3.38 | 9.06 | 4.78 | 4.53 |

| UNIT | P** | R | S** | T Dia. | U Dia. | V |
|---|---|---|---|---|---|---|
| 213 | 3/16 x 1.50 | 2.94 | 1/8 x 1.44 | .625 | .500 | .25 |
| 215 | 3/16 x 1.50 | 3.50 | 3/16 x 1.50 | .750 | .625 | .25 |
| 218 | 3/16 x 1.38 | 3.50 | 3/16 x 1.50 | .875 | .625 | .25 |
| 220 | 1/4 x 1.44 | 4.01 | 3/16 x 1.50 | 1.000 | .625 | .38 |
| 224 | 1/4 x 1.75 | 4.06 | 3/16 x 1.75 | 1.125 | .750 | .38 |
| 226 | 1/4 x 2.00 | 5.00 | 3/16 x 1.75 | 1.250 | .750 | .38 |
| 230 | 1/4 X 2.25 | 5.62 | 3/16 x 1.75 | 1.250 | .875 | .38 |
| 232 | 3/8 X 2.62 | 5.63 | 3/16 x 1.75 | 1.500 | .875 | .38 |
| 242 | 1/2 X 3.06 | 6.50 | 1/4 x 2.88 | 1.875 | 1.250 | .50 |
| 252 | 1/2 x 3.50 | 7.75 | 1/4 x 3.00 | 2.000 | 1.250 | .50 |

**applies to double output shaft*
***keyway width by length*
****On size 2600 BM style units with motor flange sizes 180TC - 250TC, the holes are rotated 45° from positions shown.*

## NEMA Motor Data

### NEMA Motor Mounting Dimensions

| Frame | AJ | AK | BD | OD | BE | BE1 | BORE | KWY.** | BF*** |
|---|---|---|---|---|---|---|---|---|---|
| 48CZ | 3.75 | 3.00 | 3.88 | 4.36 | .38 | N/A | .500 | 1/8 x 1/16 | .28 |
| 56C | 5.88 | 4.50 | 5.88 | 6.64 | .38 | N/A | .625 | 3/16 x 3/32 | .41 |
| 140TC | 5.88 | 4.50 | 5.88 | 6.64 | .38 | N/A | .875 | 3/16 x 3/32 | .41 |
| 180TC | 7.25 | 8.50 | 9.00 | N/A | N/A | .50 | 1.125 | 1/4 x 1/8 | .53 |
| 210TC | 7.25 | 8.50 | 9.00 | N/A | N/A | .50 | 1.375 | 5/16 x 5/32 | .53 |
| 250TC | 7.25 | 8.50 | 9.00 | N/A | N/A | .50 | 1.625 | 3/8 x 3/16 | .53 |

***keyway width by depth*

### NEMA Motor Flange Face Locations

| | 48CZ | | | 56C/140TC | | | 180TC | | | 210TC | | | 250TC | | |
|---|---|---|---|---|---|---|---|---|---|---|---|---|---|---|---|
| UNIT | LM | RQ | LQ | LM | RQ | LQ | LM1 | RQ | LQ1 | LM1 | RQ | LQ1 | LM1 | RQ | LQ1 |
| 213 | 5.63 | 3.09 | 3.46 | 6.07 | 3.09 | 3.46 | N/A | N/A | N/A | N/A | N/A | N/A | N/A | N/A | N/A |
| 215 | 6.16 | 3.62 | 3.99 | 6.60 | 3.62 | 3.99 | N/A | N/A | N/A | N/A | N/A | N/A | N/A | N/A | N/A |
| 218 | 6.26 | 3.59 | 4.09 | 6.70 | 3.59 | 4.09 | N/A | N/A | N/A | N/A | N/A | N/A | N/A | N/A | N/A |
| 220 | 6.63 | 4.06 | 4.46 | 7.07 | 4.06 | 4.46 | N/A | N/A | N/A | N/A | N/A | N/A | N/A | N/A | N/A |
| 224 | N/A | N/A | N/A | 7.76 | 4.09 | 4.63 | 8.76 | 4.56 | 5.06 | 8.76 | N/A | N/A | N/A | N/A | N/A |
| 226 | N/A | N/A | N/A | 8.32 | 4.82 | 5.19 | 9.32 | 5.13 | 5.62 | 9.32 | N/A | N/A | N/A | N/A | N/A |
| 230 | N/A | N/A | N/A | 8.82 | 5.32 | 5.69 | 9.82 | 5.63 | 6.12 | 9.82 | 6.06 | 6.56 | N/A | N/A | N/A |
| 232 | N/A | N/A | N/A | 9.01 | 5.51 | 5.88 | 10.01 | 5.81 | 6.31 | 10.01 | 6.25 | 6.75 | N/A | N/A | N/A |
| 242 | N/A | N/A | N/A | 11.81 | 6.04 | 6.45 | 12.90 | 6.68 | 7.21 | 12.90 | 6.68 | 7.21 | 13.46 | 7.24 | 7.77 |
| 252 | N/A | N/A | N/A | 13.21 | 7.35 | 7.85 | 14.30 | 7.98 | 8.61 | 14.30 | 7.98 | 8.61 | 14.86 | 8.54 | 9.17 |

*Note: All dimensions listed are for reference only. Contact factory for certified dimensions.*

**WARNING** *For safety, purchaser or user should provide protective guards over shaft extensions and any couplings, sheaves and belts, sprockets and chains, etc., mounted thereon.*

## Metric Motor Data

### IEC B5 & B3/B5 Metric Motor Flange Face Locations

| | D63D | | D71D | | D80D | | D90D | | D100LD D112MD | | D132D | |
|---|---|---|---|---|---|---|---|---|---|---|---|---|
| UNIT | LQ | RQ | LQ | RQ | LQ | RQ | LQ | RQ | LQ | RQ | LQ | RQ |
| 213 | 2.62 | 2.45 | 2.65 | 2.47 | 2.89 | 2.71 | N/A | N/A | N/A | N/A | N/A | N/A |
| 215 | 3.15 | 2.98 | 3.18 | 3.00 | 3.42 | 3.24 | N/A | N/A | N/A | N/A | N/A | N/A |
| 218 | 3.25 | 2.95 | 3.28 | 2.97 | 3.52 | 3.21 | N/A | N/A | N/A | N/A | N/A | N/A |
| 220 | 3.62 | 3.43 | 3.65 | 3.44 | 3.89 | 3.68 | N/A | N/A | N/A | N/A | N/A | N/A |
| 224 | N/A | N/A | 3.72 | 3.46 | 4.34 | 3.71 | N/A | N/A | N/A | N/A | N/A | N/A |
| 226 | N/A | N/A | 4.28 | 4.09 | 4.90 | 4.72 | 4.90 | 4.72 | 5.30 | 5.07 | N/A | N/A |
| 230 | N/A | N/A | 4.78 | 4.59 | 5.41 | 5.22 | 5.41 | 5.22 | 5.80 | 5.57 | N/A | N/A |
| 232 | N/A | N/A | 4.97 | 4.78 | 5.59 | 5.41 | 5.59 | 5.41 | 5.99 | 5.76 | N/A | N/A |
| 242 | N/A | N/A | N/A | N/A | N/A | N/A | 6.38 | 6.16 | 6.39 | 6.14 | 7.17 | 6.93 |
| 252 | N/A | N/A | N/A | N/A | N/A | N/A | 7.78 | 7.46 | 7.78 | 7.45 | 8.57 | 8.24 |

*Note: Metric motor flanges are available in quill-style (JMQ) only.*

### IEC B5 & B3/B5 Metric Motor Mounting Dimensions

*(All dimensions given in millimeters)*

| Frame | AJ | AK | BD | OD | BE | BORE | KWY.** | BF TAP |
|---|---|---|---|---|---|---|---|---|
| D63D | 115 | 95 | 117 | 131 | 10 | 11 | 4 x 2 | M8 x 1.25 |
| D71D | 130 | 110 | 132 | 146 | 11 | 14 | 5 x 2.5 | M8 x 1.25 |
| D80D | 165 | 130 | 165 | 184 | 15 | 19 | 6 x 3 | M10 x 1.50 |
| D90D | 165 | 130 | 165 | 184 | 15 | 24 | 8 x 3.5 | M10 x 1.50 |
| D100LD* | 215 | 180 | 216 | 237 | 18 | 28 | 8 x 3.5 | M12 x 1.75 |
| D132D | 265 | 230 | 267 | 290 | 18 | 38 | 10 x 4 | M12 x 1.75 |

**also applies to D112MD*
***keyway width by depth*

# Single Reduction

## Worm Gear Dimensions

### Style F

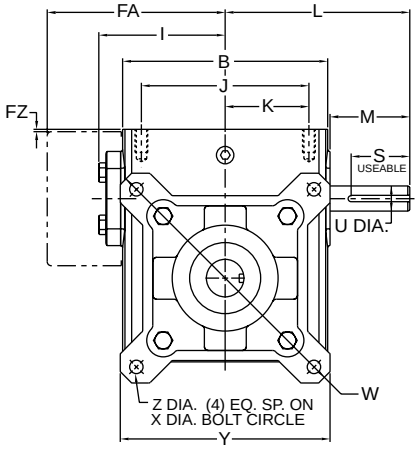


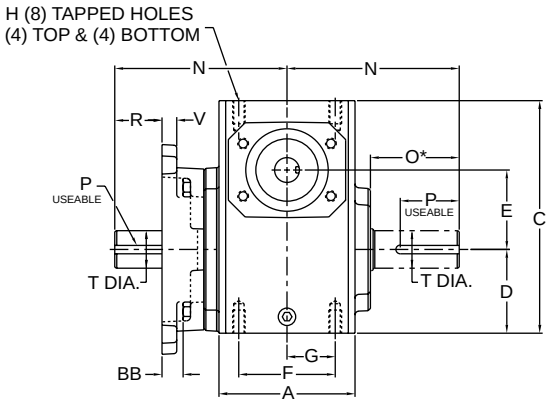


### Styles FMQ & FM

STYLE FMQ
(NEMA AND IEC B5 METRIC MOTORS)

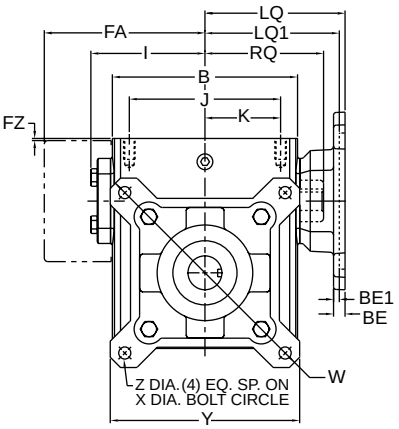


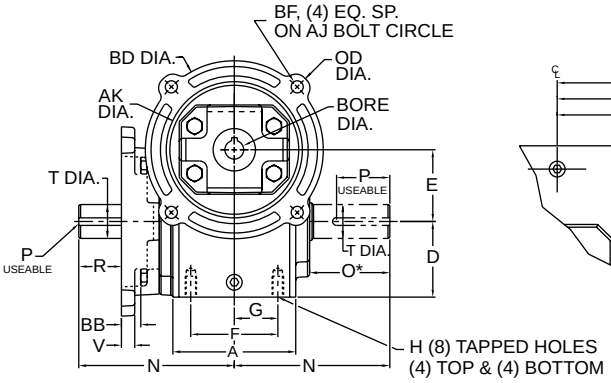


STYLE FM
(NEMA MOTORS ONLY)

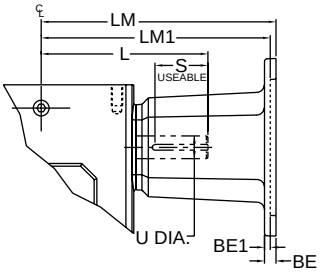


### Assemblies

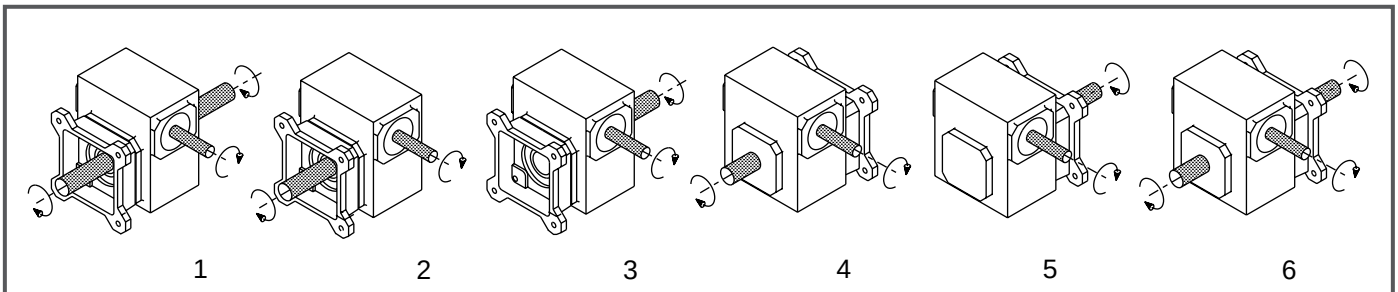


*Note: The input shaft may be rotated in either direction. Units are for mounting as shown. Contact factory for other mountings or assembly position options. Assembly positions also apply to motor flange units ("MQ" and "M").*

# Single Reduction

## Styles F, FMQ , FM

| UNIT | A | B | BB | C | D | E | F | FA | FZ | G | H | H Depth | I | J | K | L | M | N | O* |
|---|---|---|---|---|---|---|---|---|---|---|---|---|---|---|---|---|---|---|---|
| 213 | 2.82 | 3.80 | .08 | 4.66 | 1.72 | 1.333 | 2.00 | N/A | N/A | 1.00 | 5/16-18 | .50 | 2.61 | 3.25 | 1.63 | 3.82 | 1.76 | 4.00 | 2.16 |
| 215 | 3.44 | 4.88 | 1.22 | 5.38 | 1.91 | 1.540 | 2.75 | N/A | N/A | 1.38 | 5/16-18 | .63 | 3.14 | 4.19 | 2.09 | 4.35 | 1.76 | 4.31 | 2.11 |
| 218 | 3.56 | 5.06 | .11 | 5.75 | 2.06 | 1.750 | 2.75 | N/A | N/A | 1.38 | 5/16-18 | .63 | 3.24 | 4.19 | 2.09 | 4.45 | 1.76 | 4.31 | 2.05 |
| 220 | 3.81 | 5.80 | .55 | 6.38 | 2.28 | 2.063 | 3.00 | N/A | N/A | 1.50 | 5/16-18 | .63 | 3.61 | 4.75 | 2.38 | 4.82 | 1.76 | 4.68 | 2.29 |
| 224 | 4.06 | 6.12 | .51 | 6.94 | 2.50 | 2.375 | 2.88 | N/A | N/A | 1.44 | 3/8-16 | .69 | 3.77 | 5.00 | 2.50 | 5.51 | 2.38 | 5.14 | 2.66 |
| 226 | 4.84 | 7.12 | .04 | 8.00 | 2.94 | 2.625 | 3.38 | N/A | N/A | 1.69 | 3/8-16 | .69 | 4.34 | 6.38 | 3.19 | 6.07 | 2.38 | 5.63 | 2.73 |
| 230 | 5.25 | 8.12 | .07 | 8.88 | 3.25 | 3.000 | 4.00 | N/A | N/A | 2.00 | 7/16-14 | .88 | 4.84 | 7.00 | 3.50 | 6.57 | 2.38 | 6.75 | 3.60 |
| 232 | 5.75 | 8.50 | .07 | 9.38 | 3.50 | 3.250 | 4.00 | N/A | N/A | 2.00 | 7/16-14 | .88 | 5.02 | 7.50 | 3.75 | 6.76 | 2.38 | 7.06 | 3.66 |
| 242 | 6.13 | 10.25 | .06 | 11.38 | 4.44 | 4.250 | 5.00 | N/A | N/A | 2.50 | 5/8-11 | 1.00 | 6.10 | 8.50 | 4.25 | 9.57 | 3.47 | 8.12 | 4.50 |
| 252 | 7.19 | 13.00 | .34 | 14.00 | 5.12 | 5.250 | 5.81 | N/A | N/A | 2.91 | 5/8-11 | 1.25 | 7.50 | 11.00 | 5.50 | 10.88 | 3.38 | 9.06 | 4.78 |
| 2600 | 8.13 | 14.25 | 1.38 | 16.50 | 6.50 | 6.000 | 6.38 | 11.13 | .33 | 3.19 | 5/8-11 | 1.00 | N/A | 12.75 | 6.38 | 11.78 | 3.41 | 10.00 | 4.65 |
| 2700 | 7.63 | 14.88 | 1.57 | 18.91 | 7.59 | 7.000 | 5.50 | 11.37 | .35 | 2.75 | 1-8 | 1.56 | N/A | 12.50 | 6.25 | 11.50 | 2.97 | 11.76 | 5.65 |
| 2800 | 8.63 | 17.00 | 1.89 | 20.96 | 8.86 | 8.000 | 6.50 | 12.52 | .57 | 3.25 | 1-8 | 1.66 | N/A | 14.25 | 7.13 | 12.50 | 2.84 | 12.25 | 5.98 |
| 21000 | 9.53 | 20.88 | 1.85 | 25.47 | 10.36 | 10.000 | 6.88 | 14.69 | .51 | 3.44 | 1 1/4-7 | 2.04 | N/A | 17.75 | 8.88 | 15.50 | 3.76 | 14.75 | 6.76 |

| UNIT | P** | R | S** | T Dia. | U Dia. | V | W | X Dia. | Y | Z Dia. |
|---|---|---|---|---|---|---|---|---|---|---|
| 213 | 3/16 x 1.50 | 1.48 | 1/8 x 1.44 | .625 | .500 | .38 | 5.92 | 5.00 | 4.50 | .34 |
| 215 | 3/16 x 1.50 | 1.44 | 3/16 x 1.50 | .750 | .625 | .38 | 5.88 | 5.00 | 4.50 | .34 |
| 218 | 3/16 x 1.38 | 1.13 | 3/16 x 1.50 | .875 | .625 | .38 | 6.64 | 5.88 | 5.00 | .34 |
| 220 | 1/4 x 1.44 | .99 | 3/16 x 1.50 | 1.000 | .625 | .44 | 7.88 | 7.00 | 5.99 | .41 |
| 224 | 1/4 x 1.75 | 1.47 | 3/16 x 1.75 | 1.125 | .750 | .44 | 8.39 | 7.50 | 6.27 | .41 |
| 226 | 1/4 x 2.00 | 1.99 | 3/16 x 1.75 | 1.250 | .750 | .50 | 8.88 | 8.00 | 6.67 | .41 |
| 230 | 1/4 x 2.25 | 3.03 | 3/16 x 1.75 | 1.250 | .875 | .50 | 9.89 | 9.00 | 7.37 | .41 |
| 232 | 3/8 x 2.62 | 3.08 | 3/16 x 1.75 | 1.500 | .875 | .50 | 9.89 | 9.00 | 7.37 | .41 |
| 242 | 1/2 X 3.06 | 3.62 | 1/4 x 2.88 | 1.875 | 1.250 | .62 | 12.95 | 11.50 | 9.65 | .56 |
| 252 | 1/2 x 3.50 | 3.50 | 1/4 x 3.00 | 2.000 | 1.250 | .75 | 15.50 | 14.00 | 11.75 | .69 |
| 2600 | 5/8 x 4.00 | 2.78 | 3/8 x 3.00 | 2.500 | 1.500 | .75 | 18.00 | 15.63 | 14.00 | .69 |
| 2700 | 5/8 x 4.00 | 4.32 | 3/8 x 2.87 | 2.750 | 1.625 | .75 | 21.00 | 18.38 | 15.63 | .78 |
| 2800 | 3/4 x 4.50 | 3.92 | 1/2 x 2.81 | 3.000 | 1.875 | .75 | 24.00 | 21.00 | 17.88 | 1.03 |
| 21000 | 7/8 x 5.00 | 5.70 | 1/2 x 3.69 | 3.750 | 2.250 | 1.00 | 29.00 | 25.00 | 21.19 | 1.03 |

**applies to double output shaft*
***keyway width by length*
****Holes rotated 45° from positions shown on size 2600 "M" style "C" face with motor flange sizes 180TC-250TC.*

*Note: All dimensions listed are for reference only. Contact factory for certified dimensions.*

WARNING *For safety, purchaser or user should provide protective guards over shaft extensions and any couplings, sheaves and belts, sprockets and chains, etc., mounted thereon.*

## NEMA Motor Data

### NEMA Motor Mounting Dimensions

| Frame | AJ | AK | BD | OD | BE | BE1 | BORE | KWY.** | BF*** |
|---|---|---|---|---|---|---|---|---|---|
| 48CZ | 3.75 | 3.00 | 3.88 | 4.36 | .38 | N/A | .500 | 1/8 x 1/16 | .28 |
| 56C | 5.88 | 4.50 | 5.88 | 6.64 | .38 | N/A | .625 | 3/16 x 3/32 | .41 |
| 140TC | 5.88 | 4.50 | 5.88 | 6.64 | .38 | N/A | .875 | 3/16 x 3/32 | .41 |
| 180TC | 7.25 | 8.50 | 9.00 | N/A | N/A | .50 | 1.125 | 1/4 x 1/8 | .53 |
| 210TC | 7.25 | 8.50 | 9.00 | N/A | N/A | .50 | 1.375 | 5/16 x 5/32 | .53 |
| 250TC | 7.25 | 8.50 | 9.00 | N/A | N/A | .50 | 1.625 | 3/8 x 3/16 | .53 |

***keyway width by depth*

### NEMA Motor Flange Face Locations

| | 48CZ | | | 56C/140TC | | | 180TC | | | 210TC | | | 250TC | | |
|---|---|---|---|---|---|---|---|---|---|---|---|---|---|---|---|
| UNIT | LM | RQ | LQ | LM | RQ | LQ | LM1 | RQ | LQ1 | LM1 | RQ | LQ1 | LM1 | RQ | LQ1 |
| 213 | 5.63 | 3.09 | 3.46 | 6.07 | 3.09 | 3.46 | N/A | N/A | N/A | N/A | N/A | N/A | N/A | N/A | N/A |
| 215 | 6.16 | 3.62 | 3.99 | 6.60 | 3.62 | 3.99 | N/A | N/A | N/A | N/A | N/A | N/A | N/A | N/A | N/A |
| 218 | 6.26 | 3.59 | 4.09 | 6.70 | 3.59 | 4.09 | N/A | N/A | N/A | N/A | N/A | N/A | N/A | N/A | N/A |
| 220 | 6.63 | 4.06 | 4.46 | 7.07 | 4.06 | 4.46 | N/A | N/A | N/A | N/A | N/A | N/A | N/A | N/A | N/A |
| 224 | N/A | N/A | N/A | 7.76 | 4.09 | 4.63 | 8.76 | 4.56 | 5.06 | 8.76 | N/A | N/A | N/A | N/A | N/A |
| 226 | N/A | N/A | N/A | 8.32 | 4.82 | 5.19 | 9.32 | 5.13 | 5.62 | 9.32 | N/A | N/A | N/A | N/A | N/A |
| 230 | N/A | N/A | N/A | 8.82 | 5.32 | 5.69 | 9.82 | 5.63 | 6.12 | 9.82 | 6.06 | 6.56 | N/A | N/A | N/A |
| 232 | N/A | N/A | N/A | 9.01 | 5.51 | 5.88 | 10.01 | 5.81 | 6.31 | 10.01 | 6.25 | 6.75 | N/A | N/A | N/A |
| 242 | N/A | N/A | N/A | 11.81 | 6.04 | 6.45 | 12.90 | 6.68 | 7.21 | 12.90 | 6.68 | 7.21 | 13.46 | 7.24 | 7.77 |
| 252 | N/A | N/A | N/A | 13.21 | 7.35 | 7.85 | 14.30 | 7.98 | 8.61 | 14.30 | 7.98 | 8.61 | 14.86 | 8.54 | 9.17 |
| 2600 | N/A | N/A | N/A | N/A | 10.01 | 10.45 | 15.88 | 8.69 | 9.33 | 15.88 | 8.69 | 9.33 | 16.50 | 8.69 | 9.94 |
| 2700 | N/A | N/A | N/A | N/A | N/A | N/A | 15.50 | N/A | N/A | 15.50 | N/A | N/A | 15.50 | N/A | N/A |
| 2800 | N/A | N/A | N/A | N/A | N/A | N/A | N/A | N/A | N/A | 16.58 | N/A | N/A | 16.58 | N/A | N/A |

### IEC B5 & B3/B5 Metric Motor Flange Face Locations

| | D63D | | D71D | | D80D | | D90D | | D100LD D112MD | | D132D | |
|---|---|---|---|---|---|---|---|---|---|---|---|---|
| UNIT | LQ | RQ | LQ | RQ | LQ | RQ | LQ | RQ | LQ | RQ | LQ | RQ |
| 213 | 2.62 | 2.45 | 2.65 | 2.47 | 2.89 | 2.71 | N/A | N/A | N/A | N/A | N/A | N/A |
| 215 | 3.15 | 2.98 | 3.18 | 3.00 | 3.42 | 3.24 | N/A | N/A | N/A | N/A | N/A | N/A |
| 218 | 3.25 | 2.95 | 3.28 | 2.97 | 3.52 | 3.21 | N/A | N/A | N/A | N/A | N/A | N/A |
| 220 | 3.62 | 3.43 | 3.65 | 3.44 | 3.89 | 3.68 | N/A | N/A | N/A | N/A | N/A | N/A |
| 224 | N/A | N/A | 3.72 | 3.46 | 4.34 | 3.71 | N/A | N/A | N/A | N/A | N/A | N/A |
| 226 | N/A | N/A | 4.28 | 4.09 | 4.90 | 4.72 | 4.90 | 4.72 | 5.30 | 5.07 | N/A | N/A |
| 230 | N/A | N/A | 4.78 | 4.59 | 5.41 | 5.22 | 5.41 | 5.22 | 5.80 | 5.57 | N/A | N/A |
| 232 | N/A | N/A | 4.97 | 4.78 | 5.59 | 5.41 | 5.59 | 5.41 | 5.99 | 5.76 | N/A | N/A |
| 242 | N/A | N/A | N/A | N/A | N/A | N/A | 6.38 | 6.16 | 6.39 | 6.14 | 7.17 | 6.93 |
| 252 | N/A | N/A | N/A | N/A | N/A | N/A | 7.78 | 7.46 | 7.78 | 7.45 | 8.57 | 8.24 |

*Note: Metric motor flanges are available in quill-style (FMQ) only.*

## Metric Motor Data

### IEC B5 & B3/B5 Metric Motor Mounting Dimensions

*(All dimensions given in millimeters)*

| Frame | AJ | AK | BD | OD | BE | BORE | KWY.** | BF TAP |
|---|---|---|---|---|---|---|---|---|
| D63D | 115 | 95 | 117 | 131 | 10 | 11 | 4 x 2 | M8 x 1.25 |
| D71D | 130 | 110 | 132 | 146 | 11 | 14 | 5 x 2.5 | M8 x 1.25 |
| D80D | 165 | 130 | 165 | 184 | 15 | 19 | 6 x 3 | M10 x 1.50 |
| D90D | 165 | 130 | 165 | 184 | 15 | 24 | 8 x 3.5 | M10 x 1.50 |
| D100LD* | 215 | 180 | 216 | 237 | 18 | 28 | 8 x 3.5 | M12 x 1.75 |
| D132D | 265 | 230 | 267 | 290 | 18 | 38 | 10 x 4 | M12 x 1.75 |

**also applies to D112MD*
***keyway width by depth*

# Single Reduction

## Worm Gear Dimensions

### Style C

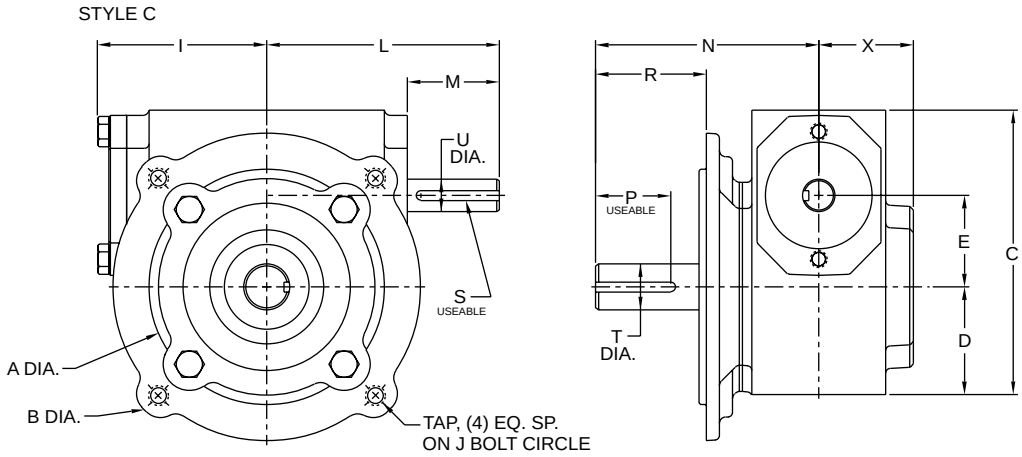


### Styles CMQ & CM

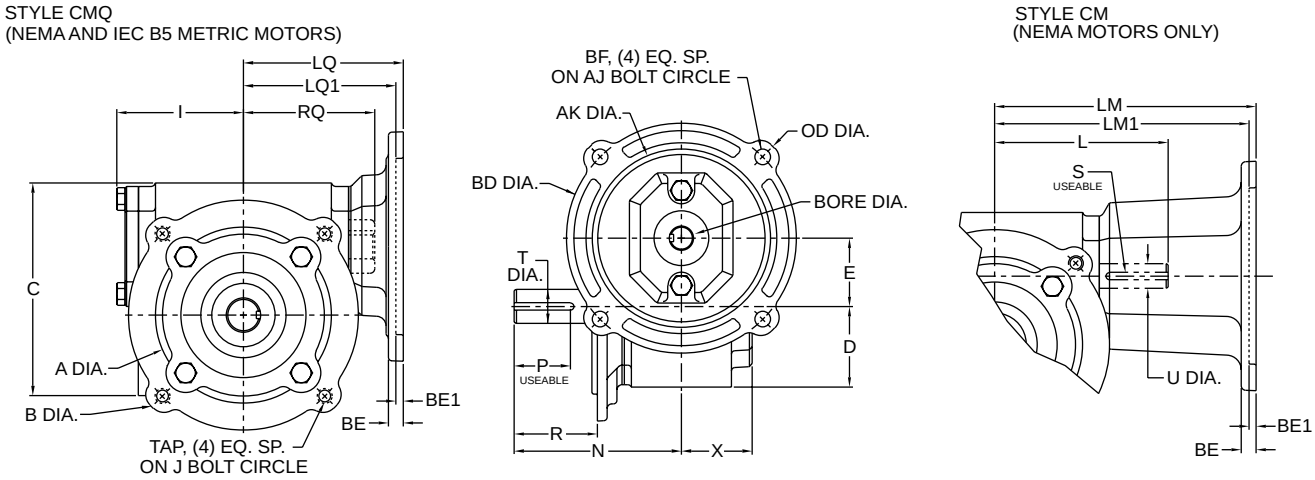


### Assemblies

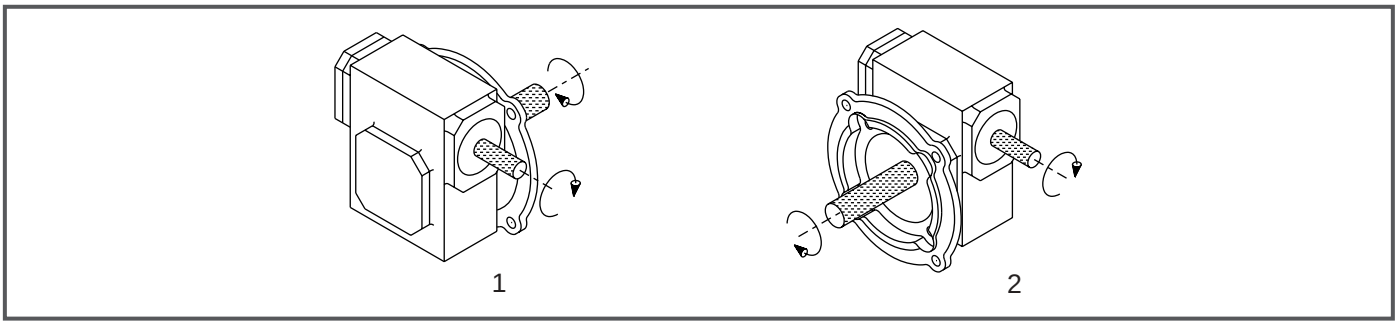


*Note: The input shaft may be rotated in either direction. Units are for mounting as shown. Contact factory for other mountings or assembly position options. Assembly positions also apply to motor flange units ("MQ" and "M").*

# Single Reduction

## Styles C, CMQ, CM

### Dimensions

| UNIT | C | D | E | I | L | M | N | S** | U Dia. | X |
|---|---|---|---|---|---|---|---|---|---|---|
| 213 | 4.66 | 1.72 | 1.333 | 2.61 | 3.82 | 1.76 | 5.00 | 1/8 x 1.44 | .500 | 1.84 |
| 218 | 5.44 | 2.06 | 1.750 | 3.24 | 4.45 | 1.76 | 4.28 | 3/16 x 1.50 | .625 | 1.81 |
| 224 | 6.88 | 2.69 | 2.375 | 3.77 | 5.51 | 2.38 | 6.59 | 3/16 x 1.75 | .750 | 1.97 |

***keyway width by length*

### Output C-Face Dimensions

| UNIT | FRAME SIZE | A | B | J | P** | R | T Dia. | TAP |
|---|---|---|---|---|---|---|---|---|
| 213 | 56C | 4.500 | 6.64 | 5.875 | 3/16 x 1.44 | 2.06 | .625 | 3/8-16 |
| 218 | 140TC | 4.500 | 6.63 | 5.875 | 3/16 x 1.44 | 2.13 | .875 | 3/8-16 |
| 224 | 180TC | 8.500 | 8.50 | 7.250 | 1/4 x 1.81 | 2.37 | 1.125 | 1/2-13 |

***keyway width by length*

## NEMA Motor Data

### NEMA Motor Flange Face Locations

| | 48CZ | | | 56C/140TC | | | 180TC | | | 210TC | | |
|---|---|---|---|---|---|---|---|---|---|---|---|---|
| UNIT | LM | RQ | LQ | LM | RQ | LQ | LM1 | RQ | LQ1 | LM1 | RQ | LQ1 |
| 213 | 5.63 | 3.09 | 3.46 | 6.07 | 3.09 | 3.46 | N/A | N/A | N/A | N/A | N/A | N/A |
| 218 | 6.26 | 3.59 | 4.09 | 6.70 | 3.59 | 4.09 | N/A | N/A | N/A | N/A | N/A | N/A |
| 224 | N/A | N/A | N/A | 7.76 | 4.09 | 4.63 | 8.76 | 4.56 | 5.06 | 8.76 | N/A | N/A |

### NEMA Motor Mounting Dimensions

| Frame | AJ | AK | BD | OD | BE | BE1 | BORE | KWY.** | BF |
|---|---|---|---|---|---|---|---|---|---|
| 48CZ | 3.75 | 3.00 | 3.88 | 4.36 | .38 | N/A | .500 | 1/8 x 1/16 | .28 |
| 56C | 5.88 | 4.50 | 5.88 | 6.64 | .38 | N/A | .625 | 3/16 x 3/32 | .41 |
| 140TC | 5.88 | 4.50 | 5.88 | 6.64 | .38 | N/A | .875 | 3/16 x 3/32 | .41 |
| 180TC | 7.25 | 8.50 | 9.00 | N/A | N/A | .50 | 1.125 | 1/4 x 1/8 | .53 |
| 210TC | 7.25 | 8.50 | 9.00 | N/A | N/A | .50 | 1.375 | 5/16 x 5/32 | .53 |

***keyway width by depth*

*Note: All dimensions listed are for reference only. Contact factory for certified dimensions.*

WARNING *For safety, purchaser or user should provide protective guards over shaft extensions and any couplings, sheaves and belts, sprockets and chains, etc., mounted thereon.*

## Metric Motor Data

### IEC B5 & B3/B5 Metric Motor Flange Face Locations

| | D63D | | D71D | | D80D | |
|---|---|---|---|---|---|---|
| UNIT | LQ | RQ | LQ | RQ | LQ | RQ |
| 213 | 2.62 | 2.45 | 2.65 | 2.47 | 2.89 | 2.71 |
| 218 | 3.25 | 2.95 | 3.28 | 2.97 | 3.52 | 3.21 |
| 224 | N/A | N/A | 3.72 | 3.46 | 4.34 | 3.71 |

*Note: Metric motor flanges are available in quill-style (CMQ) only.*

### IEC B5 & B3/B5 Metric Motor Mounting Dimensions

*(All dimensions given in millimeters)*

| Frame | AJ | AK | BD | OD | BE | BORE | KWY.** | BF TAP |
|---|---|---|---|---|---|---|---|---|
| D63D | 115 | 95 | 117 | 131 | 10 | 11 | 4 x 2 | M8 x 1.25 |
| D71D | 130 | 110 | 132 | 146 | 11 | 14 | 5 x 2.5 | M8 x 1.25 |
| D80D | 165 | 130 | 165 | 184 | 15 | 19 | 6 x 3 | M10 x 1.50 |

***keyway width by depth*

# Single Reduction

## Worm Gear Dimensions

### Style H

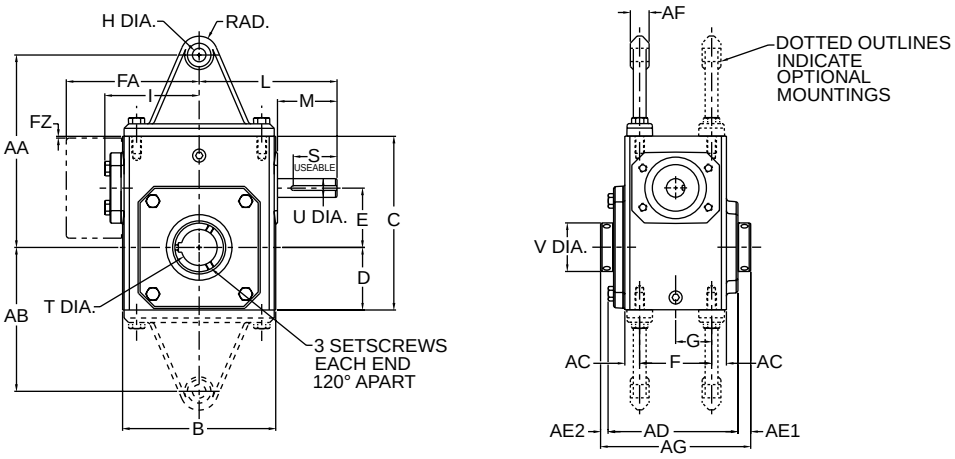


### Styles HMQ & HM

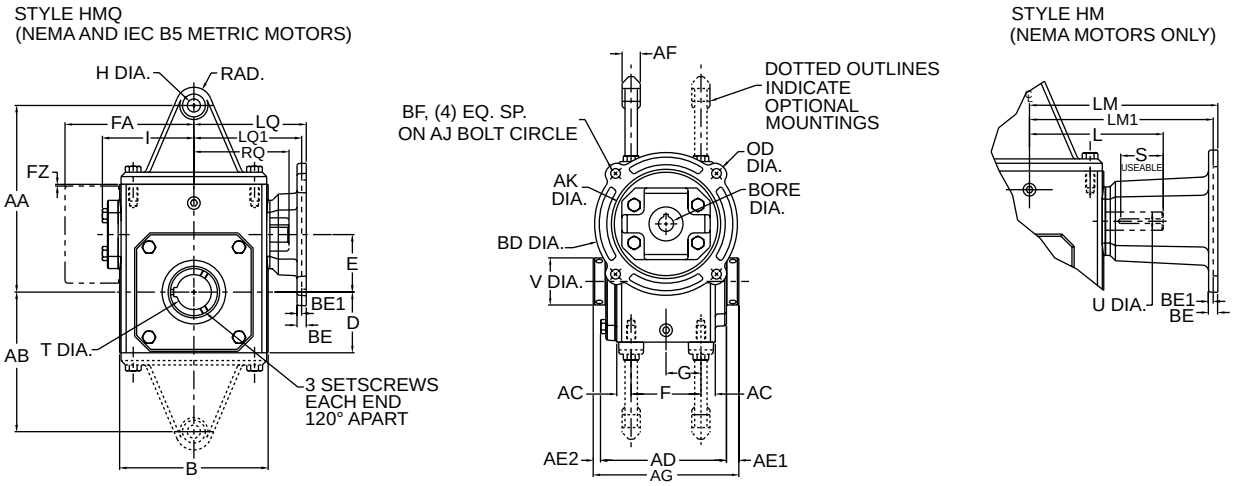


### Assemblies

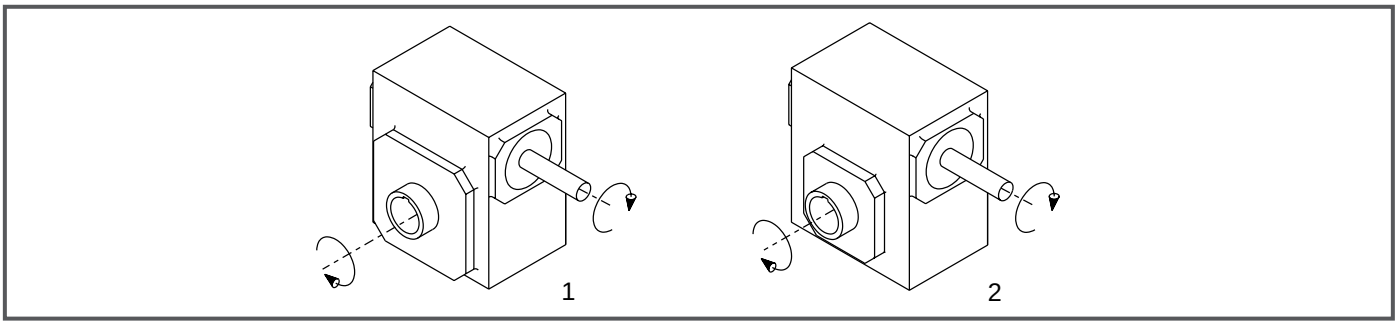


*Note: The input shaft may be rotated in either direction. Units are for mounting as shown. Contact factory for other mountings or assembly position options. Assembly positions also apply to motor flange units ("MQ" and "M").*
*(For sizes 113 - 252) Assembly #1 should be ordered if an output flange kit will be mounted on the left side of the unit and Assembly #2 should be ordered if an output flange kit will be mounted on the right side of the unit. (Also on Double Reduction and Helical/Worm)*

# Single Reduction

## Styles H, HMQ, HM

| UNIT | AA | AB | AC | AD | AE1 | AE2 | AF | AG | B | C | D | E | F | FA | FZ | G | H Dia. | I | L |
|---|---|---|---|---|---|---|---|---|---|---|---|---|---|---|---|---|---|---|---|
| 213 | 4.19 | 2.97 | .41 | 3.90 | .53 | .32 | .25 | 4.75 | 3.80 | 4.66 | 1.72 | 1.333 | 2.00 | N/A | N/A | 1.00 | .53 | 2.61 | 3.82 |
| 215 | 5.97 | 4.41 | .35 | 4.61 | .51 | .30 | .75 | 5.42 | 5.19 | 5.38 | 1.91 | 1.540 | 2.75 | N/A | N/A | 1.38 | .53 | 3.14 | 4.35 |
| 218 | 6.19 | 4.56 | .41 | 4.73 | .49 | .28 | .75 | 5.50 | 5.19 | 5.75 | 2.06 | 1.750 | 2.75 | N/A | N/A | 1.38 | .53 | 3.24 | 4.45 |
| 220 | 7.24 | 5.43 | .41 | 4.99 | .61 | .40 | .75 | 6.00 | 5.80 | 6.38 | 2.28 | 2.063 | 3.00 | N/A | N/A | 1.50 | .53 | 3.61 | 4.82 |
| 224 | 7.69 | 5.75 | .59 | 5.18 | .51 | .31 | .75 | 6.00 | 6.12 | 6.94 | 2.50 | 2.375 | 2.88 | N/A | N/A | 1.44 | .69 | 3.77 | 5.51 |
| 226 | 8.81 | 6.69 | .73 | 6.01 | .60 | .39 | .75 | 7.00 | 7.38 | 8.00 | 2.94 | 2.625 | 3.38 | N/A | N/A | 1.69 | .53 | 4.34 | 6.07 |
| 230 | 10.63 | 8.25 | .63 | 6.53 | .60 | .36 | .75 | 7.50 | 8.12 | 8.88 | 3.25 | 3.000 | 4.00 | N/A | N/A | 2.00 | .53 | 4.84 | 6.57 |
| 232 | 10.88 | 8.50 | .88 | 7.04 | .54 | .29 | .75 | 7.88 | 8.75 | 9.38 | 3.50 | 3.250 | 4.00 | N/A | N/A | 2.00 | .53 | 5.02 | 6.76 |
| 242 | 11.94 | 9.44 | .56 | 7.53 | .63 | .34 | .75 | 8.50 | 10.25 | 11.38 | 4.44 | 4.250 | 5.00 | N/A | N/A | 2.50 | .53 | 6.10 | 9.57 |
| 252 | 13.88 | 10.12 | .69 | 8.85 | .97 | .68 | 1.00 | 10.50 | 13.00 | 14.00 | 5.12 | 5.250 | 5.81 | N/A | N/A | 2.91 | .66 | 7.50 | 10.88 |
| 2600 | 15.00 | 11.50 | .88 | 10.52 | .52 | .52 | .38 | 11.50 | 14.50 | 16.50 | 6.50 | 6.000 | 6.38 | 11.13 | .33 | 3.19 | .66 | N/A | 11.78 |
| 2700 | N/A | N/A | 1.06 | 11.36 | 1.09 | 1.09 | N/A | 13.50 | 14.88 | 18.91 | 7.59 | 7.000 | 5.50 | 11.37 | .35 | 2.75 | N/A | N/A | 11.50 |
| 2800 | N/A | N/A | 1.06 | 12.48 | 1.03 | 1.03 | N/A | 14.50 | 17.00 | 20.96 | 8.86 | 8.000 | 6.50 | 12.52 | .57 | 3.25 | N/A | N/A | 12.50 |
| 21000 | N/A | N/A | 1.33 | 15.78 | 1.39 | 1.39 | N/A | 18.50 | 20.88 | 25.47 | 10.36 | 10.000 | 6.88 | 14.69 | .51 | 3.44 | N/A | N/A | 15.50 |

| UNIT | M | RAD. | S** | T-max* | T-kwy*** | U Dia. | V Dia. |
|---|---|---|---|---|---|---|---|
| 213 | 1.76 | .50 | 1/8 x 1.44 | .625 | 3/16 x 3/32 | .500 | 1.00 |
| 215 | 1.76 | .75 | 3/16 x 1.50 | .625 | 3/16 x 3/32 | .625 | 1.00 |
| 218 | 1.76 | .75 | 3/16 x 1.50 | 1.000 | 1/4 x 1/8 | .625 | 1.44 |
| 220 | 1.76 | .75 | 3/16 x 1.50 | 1.438 | 3/8 x 3/16 | .625 | 1.94 |
| 224 | 2.38 | .75 | 3/16 x 1.75 | 1.438 | 3/8 x 3/16 | .750 | 1.94 |
| 226 | 2.38 | .75 | 3/16 x 1.75 | 1.438 | 3/8 x 3/16 | .750 | 1.94 |
| 230 | 2.38 | .88 | 3/16 x 1.75 | 1.938 | 1/2 x 1/4 | .875 | 2.51 |
| 232 | 2.38 | .88 | 3/16 x 1.75 | 1.938 | 1/2/x 1/4 | .875 | 2.51 |
| 242 | 3.47 | .75 | 1/4 x 2.88 | 2.188 | 1/2 x 1/4 | 1.250 | 2.75 |
| 252 | 3.38 | 1.00 | 1/4 x 3.00 | 3.438 | 7/8 x 7/16 | 1.250 | 4.26 |
| 2600 | 3.41 | .69 | 3/8 x 3.00 | 3.438 | 7/8 x 7/16 | 1.500 | 4.18 |
| 2700 | 2.97 | N/A | 3/8 x 2.87 | 3.938 | 1 x 1/2 | 1.625 | 4.92 |
| 2800 | 2.84 | N/A | 1/2 x 2.81 | 4.438 | 1 x 1/2 | 1.875 | 5.55 |
| 21000 | 3.76 | N/A | 1/2 x 3.69 | 5.438 | 1-1/4 x 5/8 | 2.250 | 6.67 |

**T dimensions are for max. bore diameter. For other bore dimensions, refer to catalog page 169.*
***keyway width by length*
****keyway width by depth*
****Holes rotated 45° from positions shown on size 2600 "M" style "C" face with motor flange sizes 180TC-250TC.*

*Note: All dimensions listed are for reference only. Contact factory for certified dimensions.*

**WARNING** *For safety, purchaser or user should provide protective guards over shaft extensions and any couplings, sheaves and belts, sprockets and chains, etc., mounted thereon.*

## NEMA Motor Data

### NEMA Motor Mounting Dimensions

| Frame | AJ | AK | BD | OD | BE | BE1 | BORE | KWY.** | BF*** |
|---|---|---|---|---|---|---|---|---|---|
| 48CZ | 3.75 | 3.00 | 3.88 | 4.36 | .38 | N/A | .500 | 1/8 x 1/16 | .28 |
| 56C | 5.88 | 4.50 | 5.88 | 6.64 | .38 | N/A | .625 | 3/16 x 3/32 | .41 |
| 140TC | 5.88 | 4.50 | 5.88 | 6.64 | .38 | N/A | .875 | 3/16 x 3/32 | .41 |
| 180TC | 7.25 | 8.50 | 9.00 | N/A | N/A | .50 | 1.125 | 1/4 x 1/8 | .53 |
| 210TC | 7.25 | 8.50 | 9.00 | N/A | N/A | .50 | 1.375 | 5/16 x 5/32 | .53 |
| 250TC | 7.25 | 8.50 | 9.00 | N/A | N/A | .50 | 1.625 | 3/8 x 3/16 | .53 |

***keyway width by depth*

### NEMA Motor Flange Face Locations

| | 48CZ | | | 56C/140TC | | | 180TC | | | 210TC | | | 250TC | | |
|---|---|---|---|---|---|---|---|---|---|---|---|---|---|---|---|
| UNIT | LM | RQ | LQ | LM | RQ | LQ | LM1 | RQ | LQ1 | LM1 | RQ | LQ1 | LM1 | RQ | LQ1 |
| 213 | 5.63 | 3.09 | 3.46 | 6.07 | 3.09 | 3.46 | N/A | N/A | N/A | N/A | N/A | N/A | N/A | N/A | N/A |
| 215 | 6.16 | 3.62 | 3.99 | 6.60 | 3.62 | 3.99 | N/A | N/A | N/A | N/A | N/A | N/A | N/A | N/A | N/A |
| 218 | 6.26 | 3.59 | 4.09 | 6.70 | 3.59 | 4.09 | N/A | N/A | N/A | N/A | N/A | N/A | N/A | N/A | N/A |
| 220 | 6.63 | 4.06 | 4.46 | 7.07 | 4.06 | 4.46 | N/A | N/A | N/A | N/A | N/A | N/A | N/A | N/A | N/A |
| 224 | N/A | N/A | N/A | 7.76 | 4.09 | 4.63 | 8.76 | 4.56 | 5.06 | 8.76 | N/A | N/A | N/A | N/A | N/A |
| 226 | N/A | N/A | N/A | 8.32 | 4.82 | 5.19 | 9.32 | 5.13 | 5.62 | 9.32 | N/A | N/A | N/A | N/A | N/A |
| 230 | N/A | N/A | N/A | 8.82 | 5.32 | 5.69 | 9.82 | 5.63 | 6.12 | 9.82 | 6.06 | 6.56 | N/A | N/A | N/A |
| 232 | N/A | N/A | N/A | 9.01 | 5.51 | 5.88 | 10.01 | 5.81 | 6.31 | 10.01 | 6.25 | 6.75 | N/A | N/A | N/A |
| 242 | N/A | N/A | N/A | 11.81 | 6.04 | 6.45 | 12.90 | 6.68 | 7.21 | 12.90 | 6.68 | 7.21 | 13.46 | 7.24 | 7.77 |
| 252 | N/A | N/A | N/A | 13.21 | 7.35 | 7.85 | 14.30 | 7.98 | 8.61 | 14.30 | 7.98 | 8.61 | 14.86 | 8.54 | 9.17 |
| 2600 | N/A | N/A | N/A | N/A | 10.01 | 10.45 | 15.88 | 8.69 | 9.33 | 15.88 | 8.69 | 9.33 | 16.50 | 8.69 | 9.94 |
| 2700 | N/A | N/A | N/A | N/A | N/A | N/A | 15.50 | N/A | N/A | 15.50 | N/A | N/A | 15.50 | N/A | N/A |
| 2800 | N/A | N/A | N/A | N/A | N/A | N/A | N/A | N/A | N/A | 16.58 | N/A | N/A | 16.58 | N/A | N/A |

### IEC B5 & B3/B5 Metric Motor Flange Face Locations

| | D63D | | D71D | | D80D | | D90D | | D100LD D112MD | | D132D | |
|---|---|---|---|---|---|---|---|---|---|---|---|---|
| UNIT | LQ | RQ | LQ | RQ | LQ | RQ | LQ | RQ | LQ | RQ | LQ | RQ |
| 213 | 2.62 | 2.45 | 2.65 | 2.47 | 2.89 | 2.71 | N/A | N/A | N/A | N/A | N/A | N/A |
| 215 | 3.15 | 2.98 | 3.18 | 3.00 | 3.42 | 3.24 | N/A | N/A | N/A | N/A | N/A | N/A |
| 218 | 3.25 | 2.95 | 3.28 | 2.97 | 3.52 | 3.21 | N/A | N/A | N/A | N/A | N/A | N/A |
| 220 | 3.62 | 3.43 | 3.65 | 3.44 | 3.89 | 3.68 | N/A | N/A | N/A | N/A | N/A | N/A |
| 224 | N/A | N/A | 3.72 | 3.46 | 4.34 | 3.71 | N/A | N/A | N/A | N/A | N/A | N/A |
| 226 | N/A | N/A | 4.28 | 4.09 | 4.90 | 4.72 | 4.90 | 4.72 | 5.30 | 5.07 | N/A | N/A |
| 230 | N/A | N/A | 4.78 | 4.59 | 5.41 | 5.22 | 5.41 | 5.22 | 5.80 | 5.57 | N/A | N/A |
| 232 | N/A | N/A | 4.97 | 4.78 | 5.59 | 5.41 | 5.59 | 5.41 | 5.99 | 5.76 | N/A | N/A |
| 242 | N/A | N/A | N/A | N/A | N/A | N/A | 6.38 | 6.16 | 6.39 | 6.14 | 7.17 | 6.93 |
| 252 | N/A | N/A | N/A | N/A | N/A | N/A | 7.78 | 7.46 | 7.78 | 7.45 | 8.57 | 8.24 |

*Note: Metric motor flanges are available in quill-style (HMQ) only.*

## Metric Motor Data

### IEC B5 & B3/B5 Metric Motor Mounting Dimensions

*(All dimensions given in millimeters)*

| Frame | AJ | AK | BD | OD | BE | BORE | KWY.** | BF TAP |
|---|---|---|---|---|---|---|---|---|
| D63D | 115 | 95 | 117 | 131 | 10 | 11 | 4 x 2 | M8 x 1.25 |
| D71D | 130 | 110 | 132 | 146 | 11 | 14 | 5 x 2.5 | M8 x 1.25 |
| D80D | 165 | 130 | 165 | 184 | 15 | 19 | 6 x 3 | M10 x 1.50 |
| D90D | 165 | 130 | 165 | 184 | 15 | 24 | 8 x 3.5 | M10 x 1.50 |
| D100LD* | 215 | 180 | 216 | 237 | 18 | 28 | 8 x 3.5 | M12 x 1.75 |
| D132D | 265 | 230 | 267 | 290 | 18 | 38 | 10 x 4 | M12 x 1.75 |

**also applies to D112MD*
***keyway width by depth*

# Single Reduction

## Worm Gear Dimensions

### Style FH

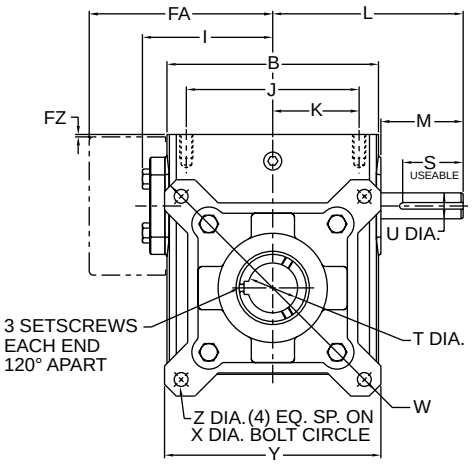


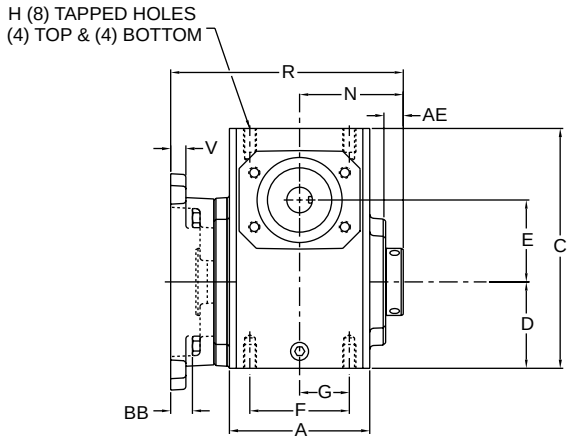


### Styles FHMQ & FHM

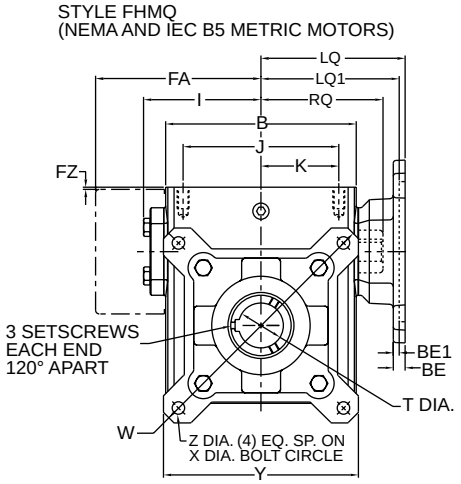


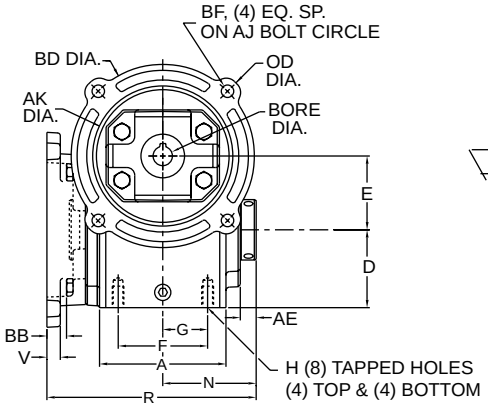


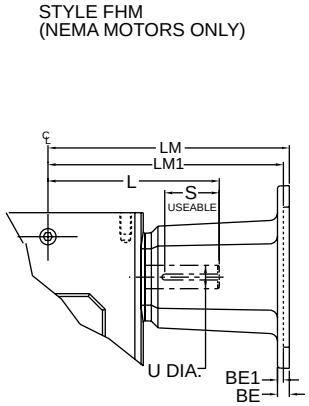


### Assemblies

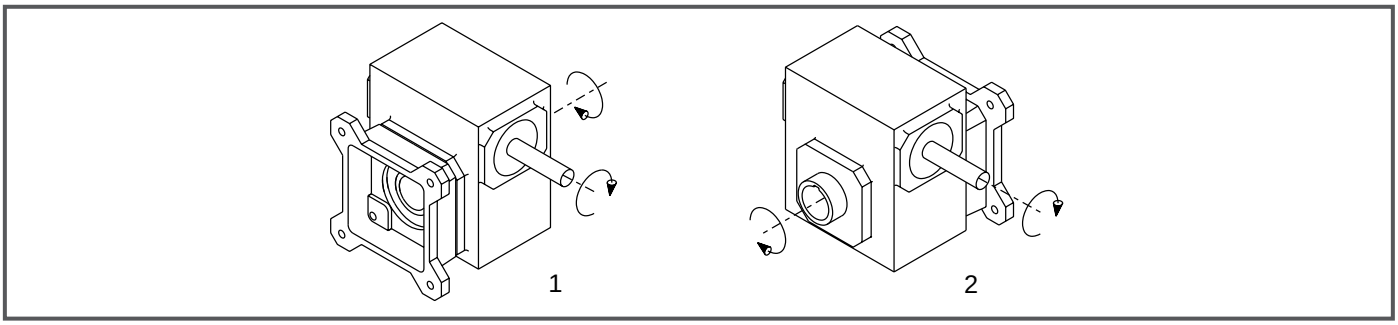


*Note: The input shaft may be rotated in either direction. Units are for mounting as shown. Contact factory for other mountings or assembly position options. Assembly positions also apply to motor flange units ("MQ" and "M").*

# Single Reduction

## Styles FH, FHMQ, FHM

| UNIT | A | AE | B | BB | C | D | E | F | FA | FZ | G | H | H Depth | I | J | K | L | M | N |
|---|---|---|---|---|---|---|---|---|---|---|---|---|---|---|---|---|---|---|---|
| 213 | 2.82 | .53 | 3.80 | .08 | 4.66 | 1.72 | 1.333 | 2.00 | N/A | N/A | 1.00 | 5/16-18 | .50 | 2.61 | 3.25 | 1.63 | 3.82 | 1.76 | 2.38 |
| 215 | 3.44 | .51 | 4.88 | 1.22 | 5.38 | 1.91 | 1.540 | 2.75 | N/A | N/A | 1.38 | 5/16-18 | .63 | 3.14 | 4.19 | 2.09 | 4.35 | 1.76 | 2.71 |
| 218 | 3.56 | .49 | 5.06 | .11 | 5.75 | 2.06 | 1.750 | 2.75 | N/A | N/A | 1.38 | 5/16-18 | .63 | 3.24 | 4.19 | 2.09 | 4.45 | 1.76 | 2.75 |
| 220 | 3.81 | .61 | 5.80 | .55 | 6.38 | 2.28 | 2.063 | 3.00 | N/A | N/A | 1.50 | 5/16-18 | .63 | 3.61 | 4.75 | 2.38 | 4.82 | 1.76 | 3.00 |
| 224 | 4.06 | .51 | 6.12 | .51 | 6.94 | 2.50 | 2.375 | 2.88 | N/A | N/A | 1.44 | 3/8-16 | .69 | 3.77 | 5.00 | 2.50 | 5.51 | 2.38 | 3.00 |
| 226 | 4.84 | .60 | 7.12 | .04 | 8.00 | 2.94 | 2.625 | 3.38 | N/A | N/A | 1.69 | 3/8-16 | .69 | 4.34 | 6.38 | 3.19 | 6.07 | 2.38 | 3.50 |
| 230 | 5.25 | .60 | 8.12 | .07 | 8.88 | 3.25 | 3.000 | 4.00 | N/A | N/A | 2.00 | 7/16-14 | .88 | 4.84 | 7.00 | 3.50 | 6.57 | 2.38 | 3.75 |
| 232 | 5.75 | .54 | 8.50 | .07 | 9.38 | 3.50 | 3.250 | 4.00 | N/A | N/A | 2.00 | 7/16-14 | .88 | 5.02 | 7.50 | 3.75 | 6.76 | 2.38 | 3.94 |
| 242 | 6.13 | .63 | 10.25 | .06 | 11.38 | 4.44 | 4.250 | 5.00 | N/A | N/A | 2.50 | 5/8-11 | 1.00 | 6.10 | 8.50 | 4.25 | 9.57 | 3.47 | 4.25 |
| 252 | 7.19 | .97 | 13.00 | .34 | 14.00 | 5.12 | 5.250 | 5.81 | N/A | N/A | 2.91 | 5/8-11 | 1.25 | 7.50 | 11.00 | 5.50 | 10.88 | 3.38 | 5.25 |
| 2600 | 8.13 | .52 | 14.25 | 1.38 | 16.50 | 6.50 | 6.000 | 6.38 | 11.13 | .33 | 3.19 | 5/8-11 | 1.00 | N/A | 12.75 | 6.38 | 11.78 | 3.41 | 5.75 |
| 2700 | 7.63 | 1.09 | 14.88 | 1.57 | 18.91 | 7.59 | 7.000 | 5.50 | 11.37 | .35 | 2.75 | 1-8 | 1.56 | N/A | 12.50 | 6.25 | 11.50 | 2.97 | 6.75 |
| 2800 | 8.63 | 1.03 | 17.00 | 1.89 | 20.96 | 8.86 | 8.000 | 6.50 | 12.52 | .57 | 3.25 | 1-8 | 1.66 | N/A | 14.25 | 7.13 | 12.50 | 2.84 | 7.25 |
| 21000 | 9.53 | 1.39 | 20.88 | 1.85 | 25.47 | 10.36 | 10.000 | 6.88 | 14.69 | .51 | 3.44 | 1 1/4-7 | 2.04 | N/A | 17.75 | 8.88 | 15.50 | 3.76 | 9.25 |

| UNIT | R | S** | T-max* | T-kwy*** | U Dia. | V | W | X Dia. | Y | Z Dia. |
|---|---|---|---|---|---|---|---|---|---|---|
| 213 | 4.90 | 1/8 x 1.44 | .625 | 3/16 x 3/32 | .500 | .38 | 5.92 | 5.00 | 4.50 | .34 |
| 215 | 6.72 | 3/16 x 1.50 | .625 | 3/16 x 3/32 | .625 | .38 | 5.88 | 5.00 | 4.50 | .34 |
| 218 | 5.94 | 3/16 x 1.50 | 1.000 | 1/4 x 1/8 | .625 | .38 | 6.64 | 5.88 | 5.00 | .34 |
| 220 | 6.69 | 3/16 x 1.50 | 1.438 | 3/8 x 3/16 | .625 | .44 | 7.88 | 7.00 | 5.99 | .41 |
| 224 | 6.73 | 3/16 x 1.75 | 1.438 | 3/8 x 3/16 | .750 | .44 | 8.39 | 7.50 | 6.27 | .41 |
| 226 | 7.20 | 3/16 x 1.75 | 1.438 | 3/8 x 3/16 | .750 | .50 | 8.88 | 8.00 | 6.67 | .41 |
| 230 | 7.53 | 3/16 x 1.75 | 1.938 | 1/2 x 1/4 | .875 | .50 | 9.89 | 9.00 | 7.37 | .41 |
| 232 | 7.97 | 3/16 x 1.75 | 1.938 | 1/2/x 1/4 | .875 | .50 | 9.89 | 9.00 | 7.37 | .41 |
| 242 | 8.81 | 1/4 x 2.88 | 2.188 | 1/2 x 1/4 | 1.250 | .62 | 12.95 | 11.50 | 9.65 | .56 |
| 252 | 10.87 | 1/4 x 3.00 | 3.438 | 7/8 x 7/16 | 1.250 | .75 | 15.50 | 14.00 | 11.75 | .69 |
| 2600 | 13.01 | 3/8 x 3.00 | 3.438 | 7/8 x 7/16 | 1.500 | .75 | 18.00 | 15.63 | 14.00 | .69 |
| 2700 | 14.20 | 3/8 x 2.87 | 3.938 | 1 x 1/2 | 1.625 | .75 | 21.00 | 18.38 | 15.63 | .78 |
| 2800 | 15.59 | 1/2 x 2.81 | 4.438 | 1 x 1/2 | 1.875 | .75 | 24.00 | 21.00 | 17.88 | 1.03 |
| 21000 | 18.32 | 1/2 x 3.69 | 5.438 | 1-1/4 x 5/8 | 2.250 | 1.00 | 29.00 | 25.00 | 21.19 | 1.03 |

**T dimensions are for max. bore diameter. For other bore dimensions, refer to catalog page 16 or 169.*
***keyway width by length*
****keyway width by depth*
****Holes rotated 45° from positions shown on size 2600 "M" style "C" face with motor flange sizes 180TC-250TC.*

*Note: All dimensions listed are for reference only. Contact factory for certified dimensions.*

**WARNING** *For safety, purchaser or user should provide protective guards over shaft extensions and any couplings, sheaves and belts, sprockets and chains, etc., mounted thereon.*

## NEMA Motor Data

### NEMA Motor Mounting Dimensions

| Frame | AJ | AK | BD | OD | BE | BE1 | BORE | KWY.** | BF*** |
|---|---|---|---|---|---|---|---|---|---|
| 48CZ | 3.75 | 3.00 | 3.88 | 4.36 | .38 | N/A | .500 | 1/8 x 1/16 | .28 |
| 56C | 5.88 | 4.50 | 5.88 | 6.64 | .38 | N/A | .625 | 3/16 x 3/32 | .41 |
| 140TC | 5.88 | 4.50 | 5.88 | 6.64 | .38 | N/A | .875 | 3/16 x 3/32 | .41 |
| 180TC | 7.25 | 8.50 | 9.00 | N/A | N/A | .50 | 1.125 | 1/4 x 1/8 | .53 |
| 210TC | 7.25 | 8.50 | 9.00 | N/A | N/A | .50 | 1.375 | 5/16 x 5/32 | .53 |
| 250TC | 7.25 | 8.50 | 9.00 | N/A | N/A | .50 | 1.625 | 3/8 x 3/16 | .53 |

***keyway width by depth*

### NEMA Motor Flange Face Locations

| | 48CZ | | | 56C/140TC | | | 180TC | | | 210TC | | | 250TC | | |
|---|---|---|---|---|---|---|---|---|---|---|---|---|---|---|---|
| UNIT | LM | RQ | LQ | LM | RQ | LQ | LM1 | RQ | LQ1 | LM1 | RQ | LQ1 | LM1 | RQ | LQ1 |
| 213 | 5.63 | 3.09 | 3.46 | 6.07 | 3.09 | 3.46 | N/A | N/A | N/A | N/A | N/A | N/A | N/A | N/A | N/A |
| 215 | 6.16 | 3.62 | 3.99 | 6.60 | 3.62 | 3.99 | N/A | N/A | N/A | N/A | N/A | N/A | N/A | N/A | N/A |
| 218 | 6.26 | 3.59 | 4.09 | 6.70 | 3.59 | 4.09 | N/A | N/A | N/A | N/A | N/A | N/A | N/A | N/A | N/A |
| 220 | 6.63 | 4.06 | 4.46 | 7.07 | 4.06 | 4.46 | N/A | N/A | N/A | N/A | N/A | N/A | N/A | N/A | N/A |
| 224 | N/A | N/A | N/A | 7.76 | 4.09 | 4.63 | 8.76 | 4.56 | 5.06 | 8.76 | N/A | N/A | N/A | N/A | N/A |
| 226 | N/A | N/A | N/A | 8.32 | 4.82 | 5.19 | 9.32 | 5.13 | 5.62 | 9.32 | N/A | N/A | N/A | N/A | N/A |
| 230 | N/A | N/A | N/A | 8.82 | 5.32 | 5.69 | 9.82 | 5.63 | 6.12 | 9.82 | 6.06 | 6.56 | N/A | N/A | N/A |
| 232 | N/A | N/A | N/A | 9.01 | 5.51 | 5.88 | 10.01 | 5.81 | 6.31 | 10.01 | 6.25 | 6.75 | N/A | N/A | N/A |
| 242 | N/A | N/A | N/A | 11.81 | 6.04 | 6.45 | 12.90 | 6.68 | 7.21 | 12.90 | 6.68 | 7.21 | 13.46 | 7.24 | 7.77 |
| 252 | N/A | N/A | N/A | 13.21 | 7.35 | 7.85 | 14.30 | 7.98 | 8.61 | 14.30 | 7.98 | 8.61 | 14.86 | 8.54 | 9.17 |
| 2600 | N/A | N/A | N/A | N/A | 10.01 | 10.45 | 15.88 | 8.69 | 9.33 | 15.88 | 8.69 | 9.33 | 16.50 | 8.69 | 9.94 |
| 2700 | N/A | N/A | N/A | N/A | N/A | N/A | 15.50 | N/A | N/A | 15.50 | N/A | N/A | 15.50 | N/A | N/A |
| 2800 | N/A | N/A | N/A | N/A | N/A | N/A | N/A | N/A | N/A | 16.58 | N/A | N/A | 16.58 | N/A | N/A |

### IEC B5 & B3/B5 Metric Motor Flange Face Locations

| | D63D | | D71D | | D80D | | D90D | | D100LD D112MD | | D132D | |
|---|---|---|---|---|---|---|---|---|---|---|---|---|
| UNIT | LQ | RQ | LQ | RQ | LQ | RQ | LQ | RQ | LQ | RQ | LQ | RQ |
| 213 | 2.62 | 2.45 | 2.65 | 2.47 | 2.89 | 2.71 | N/A | N/A | N/A | N/A | N/A | N/A |
| 215 | 3.15 | 2.98 | 3.18 | 3.00 | 3.42 | 3.24 | N/A | N/A | N/A | N/A | N/A | N/A |
| 218 | 3.25 | 2.95 | 3.28 | 2.97 | 3.52 | 3.21 | N/A | N/A | N/A | N/A | N/A | N/A |
| 220 | 3.62 | 3.43 | 3.65 | 3.44 | 3.89 | 3.68 | N/A | N/A | N/A | N/A | N/A | N/A |
| 224 | N/A | N/A | 3.72 | 3.46 | 4.34 | 3.71 | N/A | N/A | N/A | N/A | N/A | N/A |
| 226 | N/A | N/A | 4.28 | 4.09 | 4.90 | 4.72 | 4.90 | 4.72 | 5.30 | 5.07 | N/A | N/A |
| 230 | N/A | N/A | 4.78 | 4.59 | 5.41 | 5.22 | 5.41 | 5.22 | 5.80 | 5.57 | N/A | N/A |
| 232 | N/A | N/A | 4.97 | 4.78 | 5.59 | 5.41 | 5.59 | 5.41 | 5.99 | 5.76 | N/A | N/A |
| 242 | N/A | N/A | N/A | N/A | N/A | N/A | 6.38 | 6.16 | 6.39 | 6.14 | 7.17 | 6.93 |
| 252 | N/A | N/A | N/A | N/A | N/A | N/A | 7.78 | 7.46 | 7.78 | 7.45 | 8.57 | 8.24 |

## Metric Motor Data

### IEC B5 & B3/B5 Metric Motor Mounting Dimensions

*(All dimensions given in millimeters)*

| Frame | AJ | AK | BD | OD | BE | BORE | KWY.** | BF TAP |
|---|---|---|---|---|---|---|---|---|
| D63D | 115 | 95 | 117 | 131 | 10 | 11 | 4 x 2 | M8 x 1.25 |
| D71D | 130 | 110 | 132 | 146 | 11 | 14 | 5 x 2.5 | M8 x 1.25 |
| D80D | 165 | 130 | 165 | 184 | 15 | 19 | 6 x 3 | M10 x 1.50 |
| D90D | 165 | 130 | 165 | 184 | 15 | 24 | 8 x 3.5 | M10 x 1.50 |
| D100LD* | 215 | 180 | 216 | 237 | 18 | 28 | 8 x 3.5 | M12 x 1.75 |
| D132D | 265 | 230 | 267 | 290 | 18 | 38 | 10 x 4 | M12 x 1.75 |

**also applies to D112MD*

# Single Reduction

## Worm Gear Dimensions

### Style FE

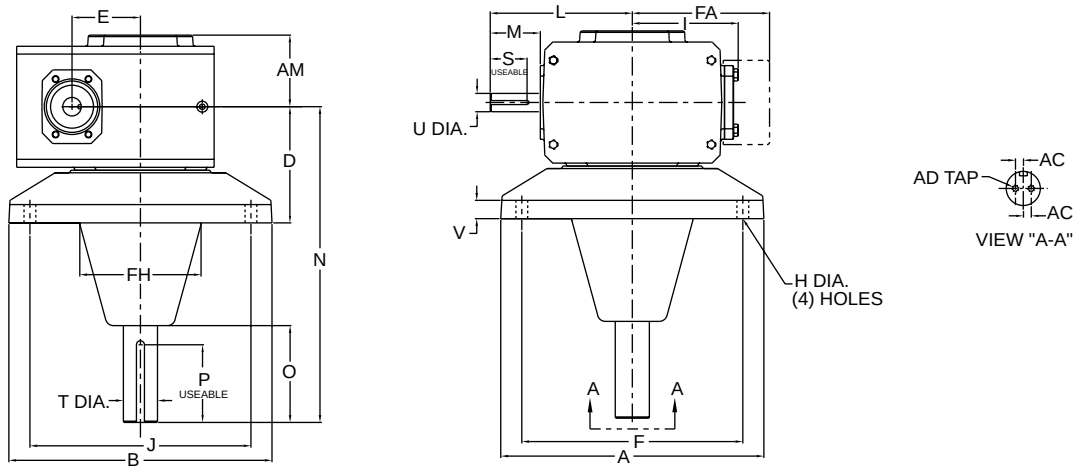


### Styles FEMQ & FEM

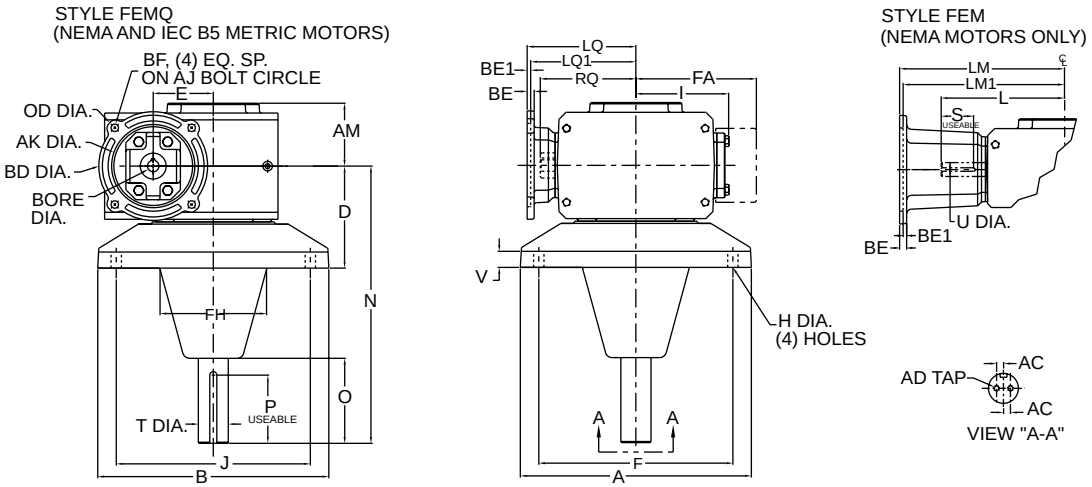


### Assemblies

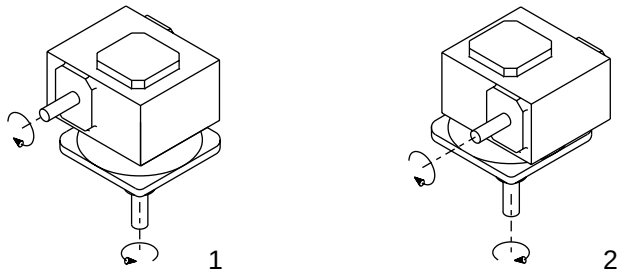


*Note: The input shaft may be rotated in either direction. Units are for mounting as shown. Contact factory for other mountings or assembly position options. Assembly positions also apply to motor flange units ("MQ" and "M").*

# Single Reduction

## Styles FE, FEMQ, FEM

| UNIT | A | AC | AD | AM | B | D | E | F | FA | FH | H Dia. | I | J | L | M | N | O | P** |
|---|---|---|---|---|---|---|---|---|---|---|---|---|---|---|---|---|---|---|
| 230 | 11.00 | .375 | .31-18 UNC X 1.00 DP | 3.15 | 11.00 | 4.60 | 3.000 | 9.00 | N/A | 5.12 | .56 | 4.84 | 9.00 | 6.57 | 2.38 | 14.38 | 4.96 | 3/8 X 3.88 |
| 232 | 12.50 | .375 | .31-18 UNC X 1.00 DP | 3.40 | 12.50 | 5.52 | 3.250 | 10.50 | N/A | 5.75 | .56 | 5.02 | 10.50 | 6.76 | 2.38 | 15.00 | 4.63 | 3/8 X 3.69 |
| 242 | 14.00 | .500 | .38-16 UNC X 1.00 DP | 3.62 | 14.00 | 5.74 | 4.250 | 12.00 | N/A | 6.75 | .69 | 6.10 | 12.00 | 9.57 | 3.47 | 16.50 | 5.91 | 3/8 X 4.68 |
| 252 | 16.00 | .750 | .38-16 UNC X 1.00 DP | 4.28 | 16.00 | 6.00 | 5.250 | 14.00 | N/A | 8.00 | .81 | 7.50 | 14.00 | 10.88 | 3.38 | 16.50 | 5.62 | 1/2 X 4.63 |
| 2600 | 19.50 | .750 | .38-16 UNC X 1.00 DP | 5.28 | 19.50 | 7.00 | 6.000 | 17.00 | 11.13 | 9.50 | .88 | N/A | 17.00 | 11.78 | 3.41 | 22.50 | 7.63 | 5/8 X 6.50 |
| 2700 | 22.00 | 1.000 | .38-16 UNC X 1.00 DP | 6.06 | 22.00 | 8.50 | 7.000 | 19.00 | 11.37 | 10.75 | 1.13 | N/A | 19.00 | 11.50 | 2.97 | 24.00 | 7.63 | 3/4 X 6.44 |
| 2800 | 28.00 | 1.062 | .62-11 UNC X 1.50 DP | 6.22 | 28.00 | 10.00 | 8.000 | 24.00 | 12.52 | 13.75 | 1.31 | N/A | 24.00 | 12.50 | 2.84 | 27.06 | 9.25 | 7/8 X 8.00 |
| 21000 | 32.00 | 1.188 | .62-11 UNC X 1.50 DP | 7.94 | 32.00 | 12.50 | 10.000 | 28.00 | 14.69 | 17.00 | 1.31 | N/A | 28.00 | 15.50 | 3.76 | 29.50 | 9.43 | 1 X 7.75 |

| UNIT | S** | T Dia. | U Dia. | V |
|---|---|---|---|---|
| 230 | 3/16 x 1.75 | 1.438 | .875 | .78 |
| 232 | 3/16 x 1.75 | 1.625 | .875 | .88 |
| 242 | 1/4 x 2.88 | 1.688 | 1.250 | 1.00 |
| 252 | 1/4 x 3.00 | 2.188 | 1.250 | 1.25 |
| 2600 | 3/8 x 3.00 | 2.438 | 1.500 | 1.50 |
| 2700 | 3/8 x 2.87 | 2.937 | 1.625 | 1.75 |
| 2800 | 1/2 x 2.81 | 3.438 | 1.875 | 2.00 |
| 21000 | 1/2 x 3.69 | 3.938 | 2.250 | 2.25 |

*Note: "O" on units size 2600 through 21000 is the minimum dimension to output seal or screw head.*

***keyway width by length*

## NEMA Motor Data

### NEMA Motor Mounting Dimensions

| Frame | AJ | AK | BD | OD | BE | BE1 | BORE | KWY.** | BF* |
|---|---|---|---|---|---|---|---|---|---|
| 56C | 5.88 | 4.50 | 5.88 | 6.64 | .38 | N/A | .625 | 3/16 x 3/32 | .41 |
| 140TC | 5.88 | 4.50 | 5.88 | 6.64 | .38 | N/A | .875 | 3/16 x 3/32 | .41 |
| 180TC | 7.25 | 8.50 | 9.00 | N/A | N/A | .50 | 1.125 | 1/4 x 1/8 | .53 |
| 210TC | 7.25 | 8.50 | 9.00 | N/A | N/A | .50 | 1.375 | 5/16 x 5/32 | .53 |
| 250TC | 7.25 | 8.50 | 9.00 | N/A | N/A | .50 | 1.625 | 3/8 x 3/16 | .53 |

**Holes rotated 45° from positions shown on size 2600 "M" style "C" face with motor flange sizes 180TC-250TC.*
***keyway width by depth*

*Note: All dimensions listed are for reference only. Contact factory for certified dimensions.*

WARNING *For safety, purchaser or user should provide protective guards over shaft extensions and any couplings, sheaves and belts, sprockets and chains, etc., mounted thereon.*

### NEMA Motor Flange Face Locations

| | 56C/140T | | | 180TC | | | 210TC | | | 250TC | | |
|---|---|---|---|---|---|---|---|---|---|---|---|---|
| UNIT | LM | RQ | LQ | LM | RQ | LQ | LM1 | RQ | LQ1 | LM1 | RQ | LQ1 |
| 230 | 8.82 | 5.32 | 5.69 | 9.82 | 5.63 | 6.12 | 9.82 | 6.06 | 6.56 | N/A | N/A | N/A |
| 232 | 9.01 | 5.51 | 5.88 | 10.01 | 5.81 | 6.31 | 10.01 | 6.25 | 6.75 | N/A | N/A | N/A |
| 242 | 11.81 | 6.04 | 6.45 | 12.90 | 6.68 | 7.21 | 12.90 | 6.68 | 7.21 | 13.46 | 7.24 | 7.77 |
| 252 | 13.21 | 7.35 | 7.85 | 14.30 | 7.98 | 8.61 | 14.30 | 7.98 | 8.61 | 14.86 | 8.54 | 9.17 |
| 2600 | N/A | 10.01 | 10.45 | 15.88 | 8.69 | 9.33 | 15.88 | 8.69 | 9.33 | 16.50 | 8.69 | 9.94 |
| 2700 | N/A | N/A | N/A | 15.50 | N/A | N/A | 15.50 | N/A | N/A | 15.50 | N/A | N/A |
| 2800 | N/A | N/A | N/A | N/A | N/A | N/A | 16.58 | N/A | N/A | 16.58 | N/A | N/A |

## Metric Motor Data

### IEC B5 & B3/B5 Metric Motor Flange Face Locations

| | D71D | | D80D | | D90D | | D100LD D112MD | | D132D | |
|---|---|---|---|---|---|---|---|---|---|---|
| UNIT | LQ | RQ | LQ | RQ | LQ | RQ | LQ | RQ | LQ | RQ |
| 230 | 4.78 | 4.59 | 5.41 | 5.22 | 5.41 | 5.22 | 5.80 | 5.57 | N/A | N/A |
| 232 | 4.97 | 4.78 | 5.59 | 5.41 | 5.59 | 5.41 | 5.99 | 5.76 | N/A | N/A |
| 242 | N/A | N/A | N/A | N/A | 6.38 | 6.16 | 6.39 | 6.14 | 7.17 | 6.93 |
| 252 | N/A | N/A | N/A | N/A | 7.78 | 7.46 | 7.78 | 7.45 | 8.57 | 8.24 |

*Note: Metric motor flanges are available in quill-style (FEMQ) only.*

### IEC B5 & B3/B5 Metric Motor Mounting Dimensions

*(All dimensions given in millimeters)*

| Frame | AJ | AK | BD | OD | BE | BORE | KWY.** | BF TAP |
|---|---|---|---|---|---|---|---|---|
| D71D | 130 | 110 | 132 | 146 | 11 | 14 | 5 x 2.5 | M8 x 1.25 |
| D80D | 165 | 130 | 165 | 184 | 15 | 19 | 6 x 3 | M10 x 1.50 |
| D90D | 165 | 130 | 165 | 184 | 15 | 24 | 8 x 3.5 | M10 x 1.50 |
| D100LD* | 215 | 180 | 216 | 237 | 18 | 28 | 8 x 3.5 | M12 x 1.75 |
| D132D | 265 | 230 | 267 | 290 | 18 | 38 | 10 x 4 | M12 x 1.75 |

**also applies to D112MD*
***keyway width by depth*

# Single Reduction

## Worm Gear Assemblies

### Styles B, BMQ, BM & R, RMQ, RM T, TMQ, TM

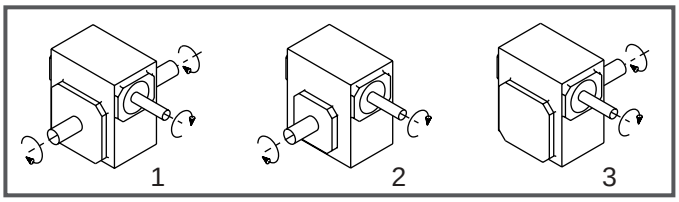


### Styles U, UMQ, UM

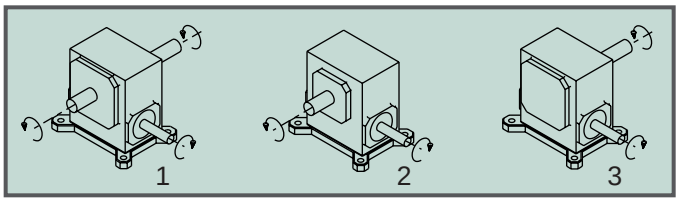


### Styles V*(L or H)*, V*(L or H)*MQ, V*(L or H)*M

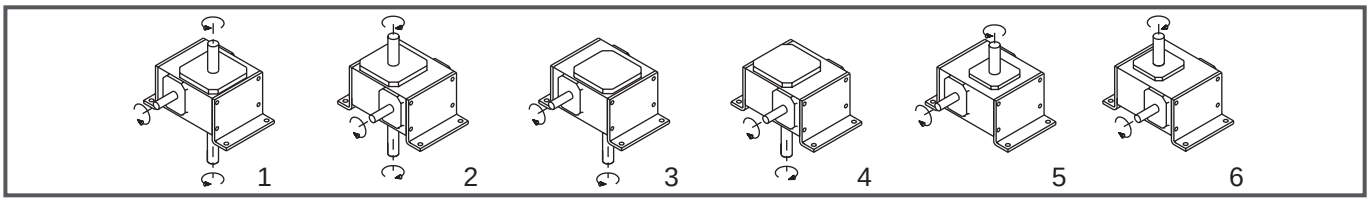


### Styles J, JMQ, JM

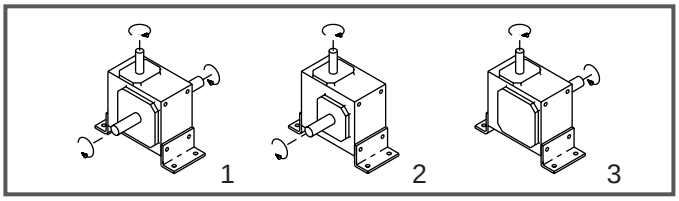


### Styles C, CMQ, CM

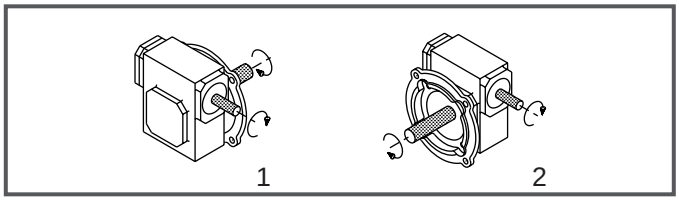


### Styles F, FMQ, FM

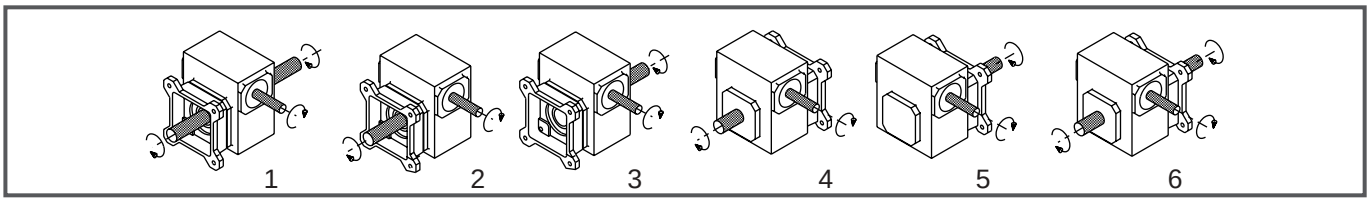


### Styles H, HMQ, HM

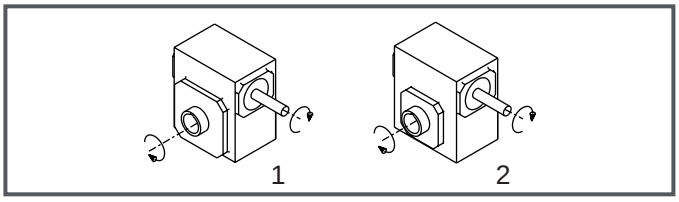


### Styles FH, FHMQ, FHM

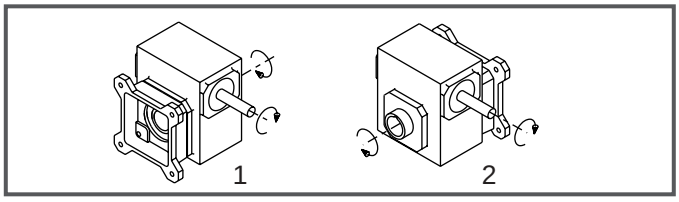


### Styles FE, FEMQ, FEM

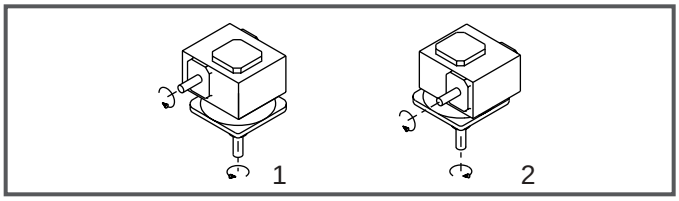


***Note: The shaded mounting positions are not recommended due to the increased probability of leakage from high speed shaft seals.*** *Assembly position options also apply to motor flange units ("MQ" and "M"). Some assembly position options may not be available for all unit sizes. Contact factory for verification. The input shaft may be rotated in either direction. Units are for mounting as shown. Contact factory for other mountings.*

# The Double Reduction Worm/Worm Flexaline Speed Reducer

New and improved dimension and assembly drawings, quick reference charts and rating tables plus more in the Worm/Worm section...

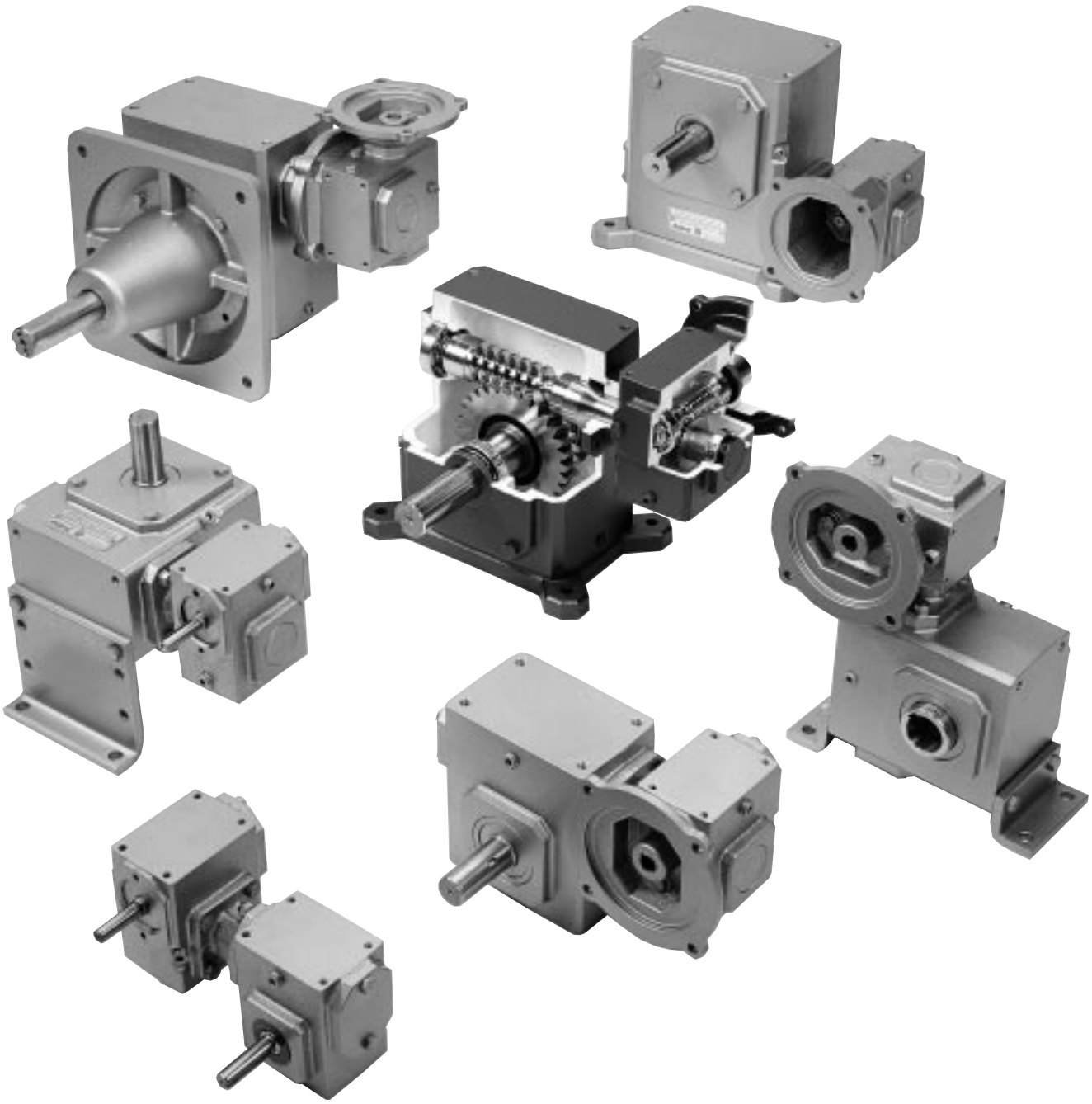

# Double Reduction
# Flexaline Speed Reducers
# Worm/Worm

**Page**

**Cutaway** . . . . . 43

**Selection Guide** . . . . . 44

**Quick Reference Selection Charts**
Class I Service 1.0 Service Factor . . . . . 46
Class II Service 1.25 Service Factor . . . . . 46

**Approximate Shipping Weights** . . . . . 47

**Rating Tables**
Size 213 to Size 220 . . . . . 48
Size 224 to Size 232 . . . . . 49
Size 242 to Size 2600 . . . . . 50
Size 2700 to Size 21000 . . . . . 51

**Low Speed Shaft Thrust Capacity** . . . . . 52

**High Speed Shaft Overhung Load (O.H.L.) Capacity** . . . . . 52

**Drop Bearing Design Overhung Load (O.H.L.) Ratings**. . . . . 52

**Dimension Sheet Index**. . . . . 53

**Dimension Sheets** . . . . . 54 - 71

**Assemblies** . . . . . 72 - 78

**Engineering Information**. . . . . 164

**Parts List** . . . . . 182 -185

# Double Reduction

## Worm / Worm Reduction Product Features

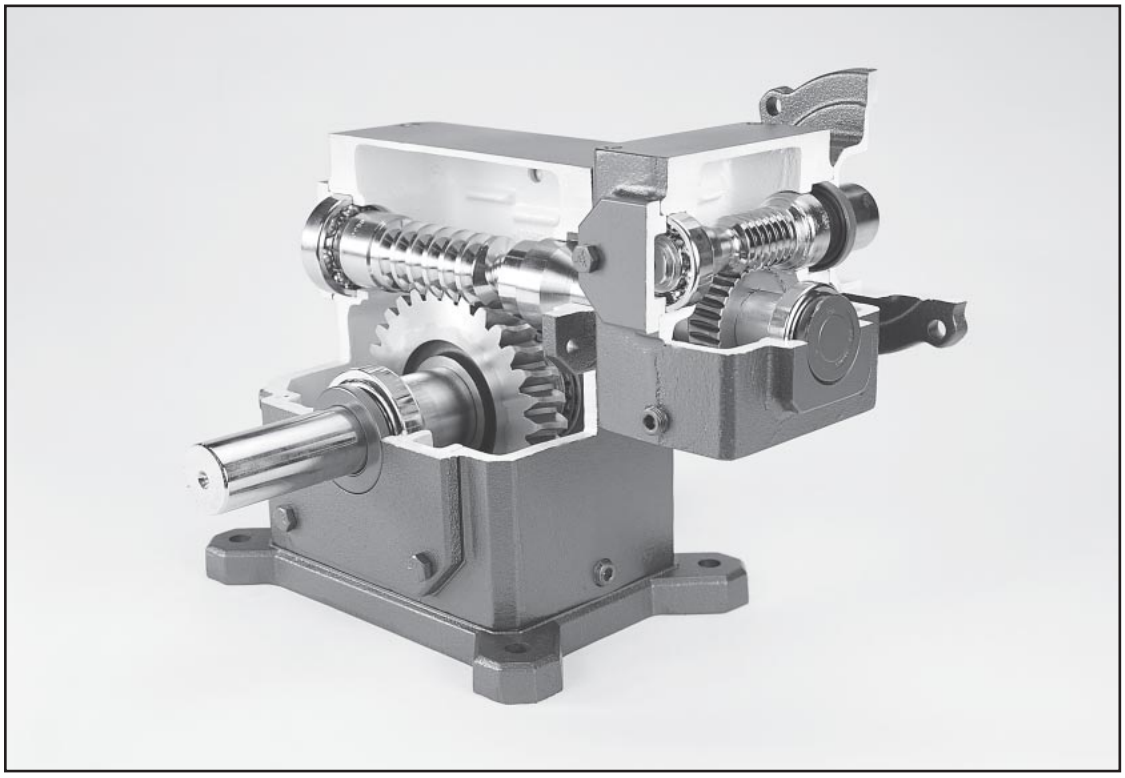

- **Rugged iron housings**, covers, and flanges provide superior strength and rigidity.
- **Single cover output design** ensures gear centering for maximum efficiency and minimum noise levels.*
- **Two separate housings in the double reduction design** insures long trouble free life of all components.
- The **worm shaft** is cut integral with the input shaft then hardened, ground, and polished to provide maximum efficiency with minimum gear noise.
- The **bronze worm gear** is chill cast from the highest quality bronze to provide superior wear and lubricity characteristics for longer life and higher efficiency.
- **Premium tapered roller bearings** on output shafts provide greater life, overhung load and thrust capacity.
- **Oversized steel output shafts** provide superior overhung load and torque characteristics.
- **Premium Chicago Rawhide Viton® double lip seals** provide extended life because of increased resistance to high temperature, abrasion and chemicals.*
- **O-rings on input and output covers** provide positive sealing without undependable gaskets or messy silicone sealants.*
- **Non-compressible metal shims** maintain factory bearing settings and gear alignment throughout the life of the product.*
- The unique **quill seal guard** protects the input seal from damage during motor installation.*
- **Large oil capacity** provides positive splash lubrication and superior cooling capability.
- **Metal nameplate drive screwed to housing** insures easy field identification for repair parts and replacement.
- **Units are oil filled at the factory** with the proper lubrication to provide simple and economical installation.**
- **All units are 100% run and leak tested** at the factory to insure that you receive the highest quality product.

** Standard on unit sizes up to and including 5 1/4 inch center distance only. (Size 213 to 252)*
*** Seven, eight, and ten inch center distance reducers are shipped without oil. (Sizes 2700, 2800, & 21000)*

# Double Reduction

## Worm / Worm Selection Guide

### Style D

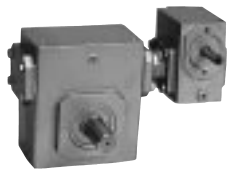

*Ratings - Pg. 48-51*
*Dimensions - Pg. 54-55*

### Style DM

*Ratings - Pg. 48-51*
*Dimensions - Pg. 54-55*

### Style DMQ

*Ratings - Pg. 48-51*
*Dimensions - Pg. 54-55*

### Style DT

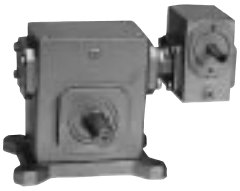

*Ratings - Pg. 48-51*
*Dimensions - Pg. 54-55*

### Style DTM

*Ratings - Pg. 48-51*
*Dimensions - Pg. 56-57*

### Style DTMQ

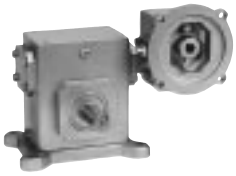

*Ratings - Pg. 48-51*
*Dimensions - Pg. 56-57*

### Style DU

*Ratings - Pg. 48-51*
*Dimensions - Pg. 58-59*

### Style DUM

*Ratings - Pg. 48-51*
*Dimensions - Pg. 58-59*

### Style DUMQ

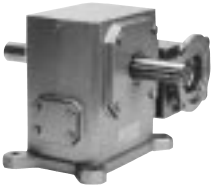

*Ratings - Pg. 48-51*
*Dimensions - Pg. 58-59*

### Style DVL

*Ratings - Pg. 48-51*
*Dimensions - Pg. 60-61*

### Style DVLM

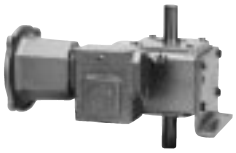

*Ratings - Pg. 48-51*
*Dimensions - Pg. 60-61*

### Style DVLMQ

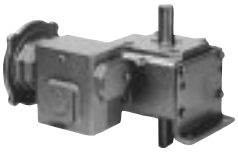

*Ratings - Pg. 48-51*
*Dimensions - Pg. 60-61*

### Style DVH

*Ratings - Pg. 48-51*
*Dimensions - Pg. 60-61*

### Style DVHM

*Ratings - Pg. 48-51*
*Dimensions - Pg. 60-61*

### Style DVHMQ

*Ratings - Pg. 48-51*
*Dimensions - Pg. 60-61*

### Style DJ

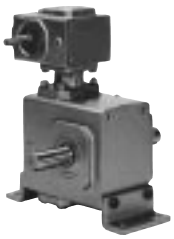

*Ratings - Pg. 48-51*
*Dimensions - Pg. 62-63*

### Style DJM

*Ratings - Pg. 48-51*
*Dimensions - Pg. 62-63*

### Style DJMQ

*Ratings - Pg. 48-51*
*Dimensions - Pg. 62-63*

### Style DF

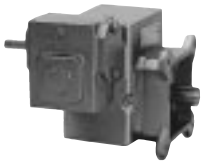

*Ratings - Pg. 48-51*
*Dimensions - Pg. 64-65*

### Style DFM

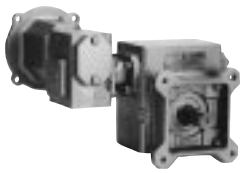

*Ratings - Pg. 48-51*
*Dimensions - Pg. 64-65*

# Double Reduction

## Worm / Worm Selection Guide

### Style DFMQ

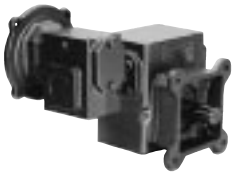

*Ratings - Pg. 48-51*
*Dimensions - Pg. 64-65*

### Style DH

*Ratings - Pg. 48-51*
*Dimensions - Pg. 66-67*

### Style DHM

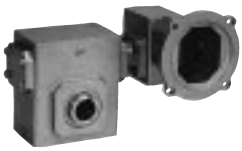

*Ratings - Pg. 48-51*
*Dimensions - Pg. 66-67*

### Style DHMQ

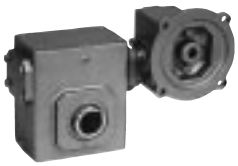

*Ratings - Pg. 48-51*
*Dimensions - Pg. 66-67*

### Style DFH

*Ratings - Pg. 48-51*
*Dimensions - Pg. 68-69*

### Style DFHM

*Ratings - Pg. 48-51*
*Dimensions - Pg. 68-69*

### Style DFHMQ

*Ratings - Pg. 48-51*
*Dimensions - Pg. 68-69*

### Style DVLH

*Ratings - Pg. 48-51*
*Dimensions - Pg.**

### Style DVLHM

*Ratings - Pg. 48-51*
*Dimensions - Pg. **

### Style DVLHMQ

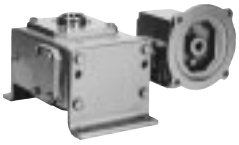

*Ratings - Pg. 48-51*
*Dimensions - Pg.**

### Style DVHH

*Ratings - Pg. 48-51*
*Dimensions - Pg.**

### Style DVHHM

*Ratings - Pg. 48-51*
*Dimensions - Pg. **

### Style DVHHMQ

*Ratings - Pg. 48-51*
*Dimensions - Pg. **

### Style DJH

*Ratings - Pg. 48-51*
*Dimensions - Pg. **

### Style DJHM

*Ratings - Pg. 48-51*
*Dimensions - Pg. **

### Style DJHMQ

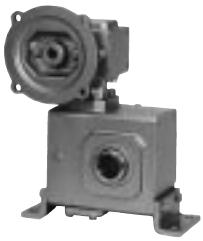

*Ratings - Pg. 48-51*
*Dimensions - Pg. **

### Style DFE

*Ratings - Pg. 49-51*
*Dimensions - Pg. 70-71*

### Style DFEM

*Ratings - Pg. 49-51*
*Dimensions - Pg. 70-71*

### Style DFEMQ

*Ratings - Pg. 49-51*
*Dimensions - Pg. 70-71*

**Contact factory for dimension information.*

# Double Reduction

## Quick Reference Model Selection Chart Worm/Worm

### Class I *(1.0 Service Factor)*

| Reduc. Ratio | Output RPM | Input Horsepower @ 1750 RPM | | | | | | | | | | | | | |
|---|---|---|---|---|---|---|---|---|---|---|---|---|---|---|---|
| | | 1/8 | 1/6 | 1/4 | 1/3 | 1/2 | 3/4 | 1 | 1.5 | 2 | 3 | 5 | 7.5 | 10 | 15 |
| 75 | 23.3 | 213 | 213 | 215 | 218 | 220 | 224 | 226 | 230 | 242 | 252 | 2600 | 2600 | 2800 | 2800 |
| 100 | 17.5 | 213 | 215 | 215 | 220 | 224 | 226 | 230 | 232 | 242 | 252 | 2600 | 2600 | 2800 | 21000 |
| 150 | 11.7 | 215 | 215 | 220 | 224 | 226 | 230 | 232 | 242 | 242 | 252 | 2600 | 2800 | 21000 | 21000 |
| 200 | 8.75 | 215 | 220 | 220 | 224 | 226 | 230 | 232 | 242 | 242 | 252 | 2700 | 2800 | 21000 | |
| 250 | 7.00 | 218 | 220 | 224 | 226 | 230 | 232 | 242 | 242 | 252 | 252 | 2800 | 21000 | 21000 | |
| 300 | 5.83 | 218 | 220 | 224 | 226 | 230 | 232 | 242 | 252 | 252 | 2600 | 2800 | 21000 | 21000 | |
| 400 | 4.38 | 220 | 224 | 226 | 230 | 232 | 242 | 242 | 252 | 252 | 2700 | 21000 | 21000 | | |
| 500 | 3.50 | 220 | 224 | 226 | 230 | 232 | 242 | 252 | 252 | 2600 | 2800 | 21000 | | | |
| 600 | 2.92 | 224 | 224 | 230 | 230 | 232 | 242 | 252 | 252 | 2600 | 2800 | 21000 | | | |
| 750 | 2.33 | 224 | 226 | 230 | 232 | 242 | 242 | 252 | 2600 | 2700 | 21000 | 21000 | | | |
| 900 | 1.94 | 224 | 230 | 230 | 232 | 242 | 252 | 252 | 2600 | 2800 | 21000 | | | | |
| 1000 | 1.75 | 226 | 230 | 230 | 232 | 242 | 252 | 252 | 2700 | 2800 | 21000 | | | | |
| 1200 | 1.46 | 226 | 230 | 232 | 232 | 242 | 252 | 252 | 2700 | 21000 | 21000 | | | | |
| 1500 | 1.17 | 230 | 230 | 232 | 242 | 252 | 252 | 2600 | 2800 | 21000 | 21000 | | | | |
| 1800 | .972 | 230 | 230 | 232 | 242 | 252 | 252 | 2600 | 21000 | 21000 | | | | | |
| 2400 | .729 | 230 | 232 | 242 | 242 | 252 | 2600 | 2800 | 21000 | 21000 | | | | | |
| 3000 | .583 | 230 | 232 | 242 | 252 | 252 | 2700 | 2800 | 21000 | | | | | | |
| 3600 | .486 | 232 | 242 | 252 | 252 | 252 | 2800 | 21000 | | | | | | | |

Not Available

*Note: This chart is meant only as a guide. For actual ratings see pages 48-51.*

### Class II *(1.25 Service Factor)*

| Reduc. RATIO | Output RPM | Input Horsepower @ 1750 RPM | | | | | | | | | | | | | |
|---|---|---|---|---|---|---|---|---|---|---|---|---|---|---|---|
| | | 1/8 | 1/6 | 1/4 | 1/3 | 1/2 | 3/4 | 1 | 1.5 | 2 | 3 | 5 | 7.5 | 10 | 15 |
| 75 | 23.3 | 213 | 215 | 218 | 220 | 224 | 226 | 230 | 242 | 242 | 252 | 2600 | 2800 | 2800 | 21000 |
| 100 | 17.5 | 215 | 215 | 220 | 220 | 224 | 230 | 230 | 242 | 242 | 252 | 2600 | 2800 | 2800 | 21000 |
| 150 | 11.7 | 215 | 220 | 220 | 224 | 226 | 230 | 232 | 242 | 252 | 252 | 2700 | 2800 | 21000 | |
| 200 | 8.75 | 218 | 220 | 224 | 226 | 230 | 232 | 242 | 242 | 252 | 2600 | 2800 | 21000 | 21000 | |
| 250 | 7.00 | 220 | 224 | 224 | 230 | 230 | 242 | 242 | 252 | 252 | 2600 | 2800 | 21000 | | |
| 300 | 5.83 | 220 | 224 | 226 | 230 | 232 | 242 | 242 | 252 | 252 | 2700 | 21000 | 21000 | | |
| 400 | 4.38 | 224 | 224 | 230 | 230 | 232 | 242 | 252 | 252 | 2600 | 2800 | 21000 | | | |
| 500 | 3.50 | 224 | 226 | 230 | 232 | 242 | 242 | 252 | 252 | 2700 | 2800 | 21000 | | | |
| 600 | 2.92 | 224 | 226 | 230 | 232 | 242 | 252 | 252 | 2600 | 2700 | 21000 | | | | |
| 750 | 2.33 | 226 | 230 | 230 | 232 | 242 | 252 | 252 | 2600 | 2800 | 21000 | | | | |
| 900 | 1.94 | 226 | 230 | 232 | 242 | 242 | 252 | 252 | 2800 | 2800 | 21000 | | | | |
| 1000 | 1.75 | 226 | 230 | 232 | 242 | 252 | 252 | 2600 | 2800 | 21000 | 21000 | | | | |
| 1200 | 1.46 | 230 | 230 | 232 | 242 | 252 | 252 | 2600 | 2800 | 21000 | 21000 | | | | |
| 1500 | 1.17 | 230 | 230 | 242 | 242 | 252 | 2600 | 2700 | 21000 | 21000 | | | | | |
| 1800 | .972 | 230 | 232 | 242 | 242 | 252 | 2600 | 2800 | 21000 | 21000 | | | | | |
| 2400 | .729 | 230 | 232 | 242 | 252 | 252 | 2800 | 21000 | 21000 | | | | | | |
| 3000 | .583 | 232 | 242 | 252 | 252 | 2600 | 2800 | 21000 | 21000 | | | | | | |
| 3600 | .486 | 242 | 242 | 252 | 252 | 2600 | 21000 | 21000 | | | | | | | |

Not Available

**For Class III** *(2.00 Service Factor)* **contact factory.**

*Note: This chart is meant only as a guide. For actual ratings see pages 48-51.*

# Worm / Worm Approximate Shipping Weights (LBS.)

| STYLE | 213 | 215 | 218 | 220 | 224 | 226 | 230 | 232 | 242 | 252 | 2600 | 2700 | 2800 | 21000 |
|---|---|---|---|---|---|---|---|---|---|---|---|---|---|---|
| D | 25 | 30 | 33 | 38 | 52 | 65 | 90 | 101 | 155 | 283 | 389 | 478 | 718 | 1136 |
| DM | 30 | 35 | 38 | 43 | 59 | 72 | 97 | 108 | 162 | 292 | 404 | 493 | 736 | 1158 |
| DMQ | 26 | 31 | 34 | 39 | 55 | 68 | 93 | 103 | 158 | 291 | 393 | 482 | 728 | 1151 |
| DT & DU | 28 | 33 | 36 | 41 | 60 | 75 | 106 | 117 | 173 | 305 | 420 | 519 | 766 | 1212 |
| DTM & DUM | 33 | 38 | 41 | 46 | 67 | 82 | 113 | 124 | 180 | 314 | 435 | 534 | 784 | 1234 |
| DTMQ & DUMQ | 29 | 34 | 37 | 42 | 63 | 78 | 109 | 119 | 176 | 313 | 424 | 523 | 776 | 1227 |
| DVL & DVH | 29 | 35 | 37 | 46 | 60 | 76 | 104 | 115 | 191 | 318 | 427 | 549 | 796 | 1292 |
| DVLM & DVHM | 34 | 40 | 42 | 51 | 67 | 83 | 111 | 122 | 198 | 327 | 442 | 564 | 814 | 1314 |
| DVLMQ & DVHMQ | 30 | 36 | 38 | 47 | 63 | 79 | 107 | 120 | 194 | 326 | 431 | 553 | 806 | 1307 |
| DJ | 26 | 33 | 35 | 41 | 55 | 75 | 96 | 107 | 204 | 301 | 412 | - | - | - |
| DJM | 31 | 38 | 40 | 46 | 62 | 82 | 103 | 114 | 211 | 310 | 427 | - | - | - |
| DJMQ | 27 | 34 | 36 | 42 | 58 | 78 | 99 | 109 | 207 | 309 | 416 | - | - | - |
| DF | 28 | 33 | 36 | 42 | 62 | 75 | 106 | 117 | 175 | 301 | 412 | 493 | 736 | 1157 |
| DFM | 33 | 38 | 41 | 47 | 69 | 82 | 113 | 124 | 182 | 310 | 427 | 508 | 754 | 1179 |
| DFMQ | 29 | 34 | 37 | 43 | 65 | 78 | 109 | 119 | 178 | 309 | 416 | 497 | 746 | 1172 |
| DH | 25 | 30 | 33 | 38 | 52 | 65 | 90 | 101 | 155 | 283 | 389 | 478 | 718 | 1136 |
| DHM | 30 | 35 | 38 | 43 | 59 | 72 | 97 | 108 | 162 | 292 | 404 | 493 | 736 | 1158 |
| DHMQ | 26 | 31 | 34 | 39 | 55 | 68 | 93 | 103 | 158 | 291 | 393 | 482 | 728 | 1151 |
| DFH | 26 | 33 | 37 | 43 | 63 | 73 | 106 | 117 | 175 | 301 | 412 | 493 | 736 | 1157 |
| DFHM | 31 | 38 | 42 | 48 | 70 | 80 | 113 | 124 | 182 | 310 | 427 | 508 | 754 | 1179 |
| DFHMQ | 27 | 34 | 38 | 44 | 66 | 76 | 109 | 119 | 178 | 309 | 416 | 497 | 746 | 1172 |
| DFE | - | - | - | - | - | - | 101 | 112 | 193 | 314 | 442 | 643 | 920 | 1406 |
| DFEM | - | - | - | - | - | - | 105 | 116 | 200 | 323 | 457 | 658 | 938 | 1438 |
| DFEMQ | - | - | - | - | - | - | 107 | 117 | 196 | 322 | 446 | 647 | 930 | 1431 |

## Flexaline Accessories
## Approximate Shipping Weights (LBS.)
## *Double Reduction Worm/Worm Design*

| ACCESSORY | | 213 | 215 | 218 | 220 | 224 | 226 | 230 | 232 | 242 | 252 | 2600 | 2700 | 2800 | 21000 |
|---|---|---|---|---|---|---|---|---|---|---|---|---|---|---|---|
| Horizontal Base | | 3 | 3 | 3 | 3 | 8 | 10 | 16 | 16 | 18 | 22 | 31 | 41 | 48 | 76 |
| Verical Base | | 4 | 4 | 4 | 8 | 8 | 11 | 14 | 14 | 28 | 36 | 36 | 71 | 78 | 156 |
| "J" Mount Base | | 1 | 2 | 2 | 3 | 3 | 4 | 6 | 6 | 11 | 18 | - | - | - | - |
| "C" Flange Kits | 56-140 | 4 | 4 | 4 | 4 | 7 | 7 | 7 | 7 | 7 | 8 | 11 | 11 | 14 | - |
| | 180-210 | - | - | - | - | - | - | - | - | - | 11 | 11 | 11 | 16 | - |
| | 250 | - | - | - | - | - | - | - | - | - | - | - | - | 28 | - |

# Double Reduction

## Worm / Worm Rating Table

| | | | Size 213 | | | | Size 215 | | | | Size 218 | | | | Size 220 | | | |
|---|---|---|---|---|---|---|---|---|---|---|---|---|---|---|---|---|---|---|
| Ratio | Input RPM | Output RPM | Input HP | Output HP | Output TQ | OHL | Input HP | Output HP | Output TQ | OHL | Input HP | Output HP | Output TQ | OHL | Input HP | Output HP | Output TQ | OHL |
| 75 | 1750 | 23.3 | .181 | .119 | 321 | 700 | .302 | .187 | 504 | 860 | .348 | .241 | 651 | 1200 | .528 | .381 | 1028 | 1000 |
| | 1170 | 15.6 | .129 | .081 | 329 | 700 | .220 | .129 | 522 | 860 | .248 | .166 | 669 | 1200 | .376 | .261 | 1056 | 1000 |
| | 870 | 11.6 | .100 | .061 | 333 | 700 | .173 | .098 | 531 | 860 | .192 | .125 | 678 | 1200 | .291 | .197 | 1072 | 1000 |
| 100 | 1750 | 17.5 | .143 | .089 | 320 | 700 | .252 | .144 | 518 | 860 | .268 | .179 | 646 | 1200 | .428 | .291 | 1047 | 1000 |
| | 1170 | 11.7 | .102 | .061 | 327 | 700 | .184 | .099 | 535 | 860 | .191 | .123 | 661 | 1200 | .306 | .200 | 1076 | 1000 |
| | 870 | 8.70 | .079 | .045 | 330 | 700 | .145 | .075 | 544 | 860 | .148 | .092 | 669 | 1200 | .238 | .151 | 1091 | 1000 |
| 150 | 1750 | 11.7 | .103 | .062 | 333 | 700 | .184 | .099 | 535 | 860 | .197 | .126 | 678 | 1200 | .309 | .201 | 1086 | 1065 |
| | 1170 | 7.80 | .072 | .042 | 336 | 700 | .132 | .068 | 547 | 860 | .139 | .085 | 687 | 1200 | .210 | .134 | 1086 | 1065 |
| | 870 | 5.80 | .056 | .031 | 338 | 700 | .104 | .051 | 553 | 860 | .108 | .064 | 692 | 1200 | .163 | .101 | 1094 | 1065 |
| 200 | 1750 | 8.75 | .081 | .046 | 330 | 700 | .149 | .076 | 544 | 860 | .152 | .093 | 669 | 1200 | .243 | .152 | 1091 | 1065 |
| | 1170 | 5.85 | .058 | .031 | 334 | 700 | .107 | .051 | 553 | 860 | .107 | .063 | 676 | 1200 | .172 | .103 | 1106 | 1065 |
| | 870 | 4.35 | .045 | .023 | 336 | 700 | .084 | .039 | 558 | 860 | .083 | .047 | 681 | 1200 | .133 | .077 | 1113 | 1065 |
| 250 | 1750 | 7.00 | .074 | .038 | 340 | 700 | .129 | .060 | 545 | 860 | .124 | .072 | 650 | 1200 | .193 | .116 | 1042 | 1065 |
| | 1170 | 4.68 | .053 | .026 | 344 | 700 | .093 | .041 | 553 | 860 | .087 | .049 | 657 | 1200 | .136 | .078 | 1055 | 1065 |
| | 870 | 3.48 | .041 | .019 | 346 | 700 | .073 | .031 | 558 | 860 | .068 | .036 | 660 | 1200 | .105 | .059 | 1062 | 1065 |
| 300 | 1750 | 5.83 | .067 | .031 | 340 | 700 | .110 | .051 | 553 | 860 | .124 | .064 | 693 | 1200 | .177 | .102 | 1106 | 1125 |
| | 1170 | 3.90 | .048 | .021 | 344 | 700 | .079 | .035 | 559 | 860 | .089 | .044 | 703 | 1200 | .125 | .069 | 1116 | 1125 |
| | 870 | 2.90 | .037 | .016 | 346 | 700 | .062 | .026 | 562 | 860 | .069 | .033 | 707 | 1200 | .097 | .052 | 1121 | 1125 |
| 400 | 1750 | 4.38 | .047 | .023 | 336 | 700 | .088 | .039 | 558 | 860 | .088 | .047 | 680 | 1200 | .141 | .077 | 1113 | 1175 |
| | 1170 | 2.93 | .034 | .016 | 337 | 700 | .064 | .026 | 562 | 860 | .062 | .031 | 684 | 1200 | .101 | .052 | 1121 | 1175 |
| | 870 | 2.18 | .026 | .012 | 338 | 700 | .050 | .019 | 565 | 860 | .049 | .024 | 686 | 1200 | .078 | .039 | 1125 | 1175 |
| 500 | 1750 | 3.50 | .043 | .019 | 346 | 700 | .077 | .031 | 561 | 860 | .076 | .038 | 683 | 1200 | .122 | .062 | 1118 | 1210 |
| | 1170 | 2.34 | .031 | .013 | 348 | 700 | .056 | .021 | 564 | 860 | .055 | .026 | 686 | 1200 | .088 | .042 | 1124 | 1210 |
| | 870 | 1.74 | .025 | .010 | 349 | 700 | .044 | .016 | 566 | 860 | .043 | .019 | 688 | 1200 | .069 | .031 | 1127 | 1210 |
| 600 | 1750 | 2.92 | .039 | .016 | 346 | 700 | .068 | .026 | 562 | 860 | .073 | .033 | 707 | 1200 | .107 | .052 | 1121 | 1255 |
| | 1170 | 1.95 | .028 | .011 | 348 | 700 | .050 | .017 | 565 | 860 | .053 | .022 | 712 | 1200 | .078 | .035 | 1126 | 1255 |
| | 870 | 1.45 | .022 | .008 | 349 | 700 | .040 | .013 | 567 | 860 | .042 | .016 | 714 | 1200 | .062 | .026 | 1129 | 1255 |
| 750 | 1750 | 2.33 | .033 | .013 | 348 | 700 | .060 | .021 | 562 | 860 | .064 | .026 | 710 | 1200 | .093 | .042 | 1123 | 1210 |
| | 1170 | 1.56 | .025 | .009 | 349 | 700 | .044 | .014 | 566 | 860 | .046 | .017 | 714 | 1200 | .068 | .028 | 1129 | 1210 |
| | 870 | 1.16 | .020 | .006 | 350 | 700 | .035 | .010 | 567 | 860 | .037 | .013 | 716 | 1200 | .053 | .021 | 1132 | 1210 |
| 900 | 1750 | 1.94 | .030 | .011 | 348 | 700 | .057 | .017 | 561 | 860 | .056 | .022 | 712 | 1200 | .082 | .035 | 1126 | 1255 |
| | 1170 | 1.30 | .022 | .007 | 349 | 700 | .042 | .012 | 565 | 860 | .041 | .015 | 715 | 1200 | .060 | .023 | 1131 | 1255 |
| | 870 | .967 | .018 | .005 | 350 | 700 | .034 | .009 | 566 | 860 | .033 | .011 | 716 | 1200 | .048 | .017 | 1134 | 1255 |
| 1000 | 1750 | 1.75 | .028 | .009 | 349 | 700 | .049 | .016 | 566 | 860 | .048 | .019 | 688 | 1200 | .076 | .031 | 1127 | 1385 |
| | 1170 | 1.17 | .021 | .006 | 350 | 700 | .036 | .011 | 568 | 860 | .035 | .013 | 689 | 1200 | .056 | .021 | 1130 | 1385 |
| | 870 | .870 | .016 | .005 | 350 | 700 | .029 | .008 | 569 | 860 | .028 | .010 | 690 | 1200 | .044 | .016 | 1132 | 1385 |
| 1200 | 1750 | 1.46 | .026 | .008 | 349 | 700 | .045 | .013 | 567 | 860 | .047 | .017 | 714 | 1200 | .068 | .026 | 1130 | 1315 |
| | 1170 | .975 | .019 | .005 | 350 | 700 | .033 | .009 | 569 | 860 | .034 | .011 | 716 | 1200 | .050 | .018 | 1134 | 1315 |
| | 870 | .725 | .015 | .004 | 350 | 700 | .027 | .007 | 569 | 860 | .027 | .008 | 718 | 1200 | .040 | .013 | 1136 | 1315 |
| 1500 | 1750 | 1.17 | .022 | .006 | 350 | 700 | .040 | .010 | 567 | 860 | .041 | .013 | 716 | 1200 | .059 | .021 | 1132 | 1385 |
| | 1170 | .780 | .016 | .004 | 350 | 700 | .030 | .007 | 569 | 860 | .030 | .009 | 717 | 1200 | .043 | .014 | 1135 | 1385 |
| | 870 | .580 | .013 | .003 | 351 | 700 | .024 | .005 | 569 | 860 | .024 | .007 | 718 | 1200 | .034 | .011 | 1137 | 1385 |
| 1800 | 1750 | .972 | .020 | .005 | 350 | 700 | .038 | .008 | 566 | 860 | .037 | .011 | 716 | 1200 | .054 | .018 | 1134 | 1415 |
| | 1170 | .650 | .015 | .004 | 350 | 700 | .029 | .006 | 568 | 860 | .027 | .007 | 718 | 1200 | .040 | .012 | 1136 | 1415 |
| | 870 | .483 | .012 | .003 | 351 | 700 | .023 | .004 | 569 | 860 | .022 | .006 | 719 | 1200 | .032 | .009 | 1137 | 1415 |
| 2400 | 1750 | .729 | .017 | .004 | 337 | 700 | .033 | .006 | 563 | 860 | .029 | .008 | 683 | 1200 | .046 | .013 | 1120 | 1415 |
| | 1170 | .488 | .012 | .003 | 337 | 700 | .025 | .004 | 564 | 860 | .021 | .005 | 685 | 1200 | .034 | .009 | 1123 | 1415 |
| | 870 | .363 | .010 | .002 | 338 | 700 | .020 | .003 | 565 | 860 | .017 | .004 | 685 | 1200 | .027 | .007 | 1124 | 1415 |
| 3000 | 1750 | .583 | .015 | .003 | 317 | 700 | .029 | .005 | 544 | 860 | .023 | .006 | 640 | 1200 | .036 | .009 | 1031 | 1415 |
| | 1170 | .390 | .010 | .002 | 317 | 700 | .022 | .003 | 545 | 860 | .017 | .004 | 641 | 1200 | .027 | .006 | 1033 | 1415 |
| | 870 | .290 | .008 | .001 | 317 | 700 | .018 | .003 | 546 | 860 | .014 | .003 | 642 | 1200 | .021 | .005 | 1034 | 1415 |
| 3600 | 1750 | .486 | .012 | .002 | 303 | 700 | .026 | .004 | 514 | 860 | .020 | .005 | 608 | 1200 | .035 | .008 | 1031 | 1415 |
| | 1170 | .325 | .009 | .002 | 304 | 700 | .019 | .003 | 516 | 860 | .015 | .003 | 609 | 1200 | .026 | .005 | 1034 | 1415 |
| | 870 | .242 | .007 | .001 | 304 | 700 | .016 | .002 | 517 | 860 | .012 | .002 | 609 | 1200 | .021 | .004 | 1035 | 1415 |

*Note: All torque values listed in inch-pounds, all overhung load values listed in pounds. The point of application of the overhung load is considered to be one shaft diameter measured outward from the gear case housing. See page 52 for extended bearing (Styles DFE, DFEM & DFEMQ) and input shaft overhung load (OHL) capacity. At speeds above 1750 RPM, units may become*

# Double Reduction

## Worm / Worm Rating Table

| | | | Size 224 | | | | Size 226 | | | | Size 230 | | | | Size 232 | | | |
|---|---|---|---|---|---|---|---|---|---|---|---|---|---|---|---|---|---|---|
| Ratio | Input RPM | Output RPM | Input HP | Output HP | Output TQ | OHL | Input HP | Output HP | Output TQ | OHL | Input HP | Output HP | Output TQ | OHL | Input HP | Output HP | Output TQ | OHL |
| 75 | 1750 | 23.3 | .835 | .603 | 1629 | 1770 | 1.02 | .758 | 2047 | 1625 | 01.61 | 1.19 | 3206 | 2170 | 1.61 | 1.19 | 3214 | 2275 |
| | 170 | 15.6 | .599 | .417 | 1684 | 1770 | .724 | .522 | 2111 | 1625 | 1.19 | .845 | 3412 | 2170 | 1.32 | .933 | 3770 | 2275 |
| | 870 | 11.6 | .465 | .315 | 1712 | 1770 | .561 | .395 | 2145 | 1625 | .934 | .641 | 3483 | 2170 | 1.09 | .749 | 4070 | 2275 |
| 100 | 1750 | 17.5 | .670 | .458 | 1650 | 1770 | .865 | .607 | 2186 | 1625 | 1.31 | .912 | 3284 | 2170 | 1.61 | 1.14 | 4114 | 2275 |
| | 1170 | 11.7 | .482 | .316 | 1704 | 1770 | .622 | .419 | 2258 | 1625 | .950 | .635 | 3420 | 2170 | 1.25 | .849 | 4574 | 2275 |
| | 870 | 8.70 | .376 | .239 | 1733 | 1770 | .484 | .317 | 2297 | 1625 | .746 | .482 | 3492 | 2170 | .984 | .645 | 4675 | 2275 |
| 150 | 1750 | 11.7 | .477 | .311 | 1712 | 1770 | .619 | .418 | 2259 | 1625 | .970 | .644 | 3482 | 2170 | 1.33 | .842 | 4547 | 2275 |
| | 1170 | 7.80 | .337 | .215 | 1740 | 1770 | .439 | .286 | 2308 | 1625 | .694 | .440 | 3552 | 2170 | .984 | .588 | 4755 | 2275 |
| | 870 | 5.80 | .261 | .162 | 1755 | 1770 | .341 | .215 | 2334 | 1625 | .540 | .330 | 3589 | 2170 | .781 | .448 | 4867 | 2275 |
| 200 | 1750 | 8.75 | .385 | .240 | 1732 | 1770 | .496 | .319 | 2296 | 1625 | .775 | .485 | 3491 | 2170 | 1.02 | .649 | 4673 | 2275 |
| | 1170 | 5.85 | .273 | .163 | 1760 | 1770 | .351 | .217 | 2334 | 1625 | .556 | .331 | 3563 | 2170 | .734 | .443 | 4773 | 2275 |
| | 870 | 4.35 | .212 | .123 | 1775 | 1770 | .272 | .163 | 2353 | 1625 | .435 | .248 | 3600 | 2170 | .574 | .333 | 4825 | 2275 |
| 250 | 1750 | 7.00 | .319 | .189 | 1704 | 1770 | .404 | .249 | 2241 | 1625 | .665 | .396 | 3563 | 2170 | .838 | .509 | 4581 | 2275 |
| | 1170 | 4.68 | .226 | .129 | 1730 | 1770 | .286 | .169 | 2276 | 1625 | .479 | .270 | 3633 | 2170 | .603 | .347 | 4673 | 2275 |
| | 870 | 3.48 | .176 | .096 | 1744 | 1770 | .222 | .127 | 2294 | 1625 | .375 | .203 | 3669 | 2170 | .472 | .261 | 4722 | 2275 |
| 300 | 1750 | 5.83 | .281 | .163 | 1760 | 1770 | .361 | .216 | 2334 | 1625 | .580 | .332 | 3589 | 2170 | .811 | .450 | 4865 | 2275 |
| | 1170 | 3.90 | .200 | .110 | 1779 | 1770 | .257 | .146 | 2359 | 1625 | .417 | .224 | 3625 | 2170 | .589 | .308 | 4975 | 2275 |
| | 870 | 2.90 | .155 | .082 | 1789 | 1770 | .199 | .109 | 2373 | 1625 | .327 | .168 | 3643 | 2170 | .463 | .232 | 5033 | 2275 |
| 400 | 1750 | 4.38 | .224 | .123 | 1775 | 1770 | .288 | .163 | 2353 | 1625 | .467 | .250 | 3599 | 2170 | .616 | .335 | 4824 | 2275 |
| | 1170 | 2.93 | .160 | .083 | 1789 | 1770 | .206 | .110 | 2372 | 1625 | .336 | .169 | 3636 | 2170 | .444 | .226 | 4876 | 2275 |
| | 870 | 2.18 | .124 | .062 | 1796 | 1770 | .159 | .082 | 2382 | 1625 | .264 | .126 | 3655 | 2170 | .349 | .169 | 4902 | 2275 |
| 500 | 1750 | 3.50 | .194 | .099 | 1783 | 1770 | .249 | .131 | 2365 | 1625 | .402 | .204 | 3669 | 2170 | .528 | .270 | 4855 | 2275 |
| | 1170 | 2.34 | .139 | .067 | 1795 | 1770 | .179 | .088 | 2380 | 1625 | .290 | .138 | 3705 | 2170 | .382 | .182 | 4896 | 2275 |
| | 870 | 1.74 | .110 | .050 | 1801 | 1770 | .141 | .066 | 2388 | 1625 | .229 | .103 | 3723 | 2170 | .300 | .136 | 4918 | 2275 |
| 600 | 1750 | 2.92 | .174 | .083 | 1795 | 1770 | .220 | .110 | 2372 | 1625 | .357 | .170 | 3671 | 2170 | .497 | .233 | 5032 | 2275 |
| | 1170 | 1.95 | .125 | .056 | 1809 | 1770 | .159 | .074 | 2385 | 1625 | .258 | .115 | 3707 | 2170 | .361 | .157 | 5088 | 2275 |
| | 870 | 1.45 | .097 | .042 | 1817 | 1770 | .126 | .055 | 2392 | 1625 | .203 | .086 | 3725 | 2170 | .285 | .118 | 5118 | 2275 |
| 750 | 1750 | 2.33 | .150 | .067 | 1804 | 1770 | .180 | .086 | 2311 | 1625 | .313 | .137 | 3705 | 2170 | .429 | .188 | 5066 | 2275 |
| | 1170 | 1.56 | .109 | .045 | 1815 | 1770 | .131 | .058 | 2323 | 1625 | .229 | .092 | 3729 | 2170 | .313 | .127 | 5111 | 2275 |
| | 870 | 1.16 | .086 | .034 | 1821 | 1770 | .104 | .043 | 2329 | 1625 | .184 | .069 | 3742 | 2170 | .247 | .095 | 5135 | 2275 |
| 900 | 1750 | 1.94 | .133 | .056 | 1809 | 1770 | .154 | .070 | 2261 | 1625 | .278 | .114 | 3707 | 2170 | .389 | .157 | 5088 | 2275 |
| | 1170 | 1.30 | .097 | .038 | 1819 | 1770 | .112 | .047 | 2273 | 1625 | .203 | .077 | 3731 | 2170 | .286 | .106 | 5127 | 2275 |
| | 870 | .967 | .077 | .028 | 1824 | 1770 | .089 | .035 | 2278 | 1625 | .164 | .057 | 3743 | 2170 | .228 | .079 | 5146 | 2275 |
| 1000 | 1750 | 1.75 | .122 | .050 | 1801 | 1770 | .156 | .066 | 2388 | 1625 | .262 | .103 | 3723 | 2170 | .334 | .134 | 4821 | 2275 |
| | 1170 | 1.17 | .089 | .034 | 1806 | 1770 | .114 | .091 | 2396 | 1625 | .195 | .069 | 3741 | 2170 | .244 | .090 | 4861 | 2275 |
| | 870 | .870 | .071 | .025 | 1809 | 1770 | .090 | .033 | 2400 | 1625 | .156 | .052 | 3751 | 2170 | .192 | .067 | 4882 | 2275 |
| 1200 | 1750 | 1.46 | .110 | .042 | 1817 | 1770 | .142 | .055 | 2392 | 1625 | .233 | .086 | 3725 | 2170 | .327 | .118 | 5117 | 2275 |
| | 1170 | .975 | .081 | .028 | 1824 | 1770 | .104 | .037 | 2398 | 1625 | .174 | .058 | 3743 | 2170 | .241 | .079 | 5146 | 2275 |
| | 870 | .725 | .064 | .021 | 1828 | 1770 | .083 | .028 | 2402 | 1625 | .139 | .043 | 3742 | 2170 | .196 | .059 | 5161 | 2275 |
| 1500 | 1750 | 1.17 | .095 | .034 | 1821 | 1770 | .116 | .043 | 2329 | 1625 | .211 | .069 | 3741 | 2170 | .287 | .095 | 5134 | 2275 |
| | 1170 | .780 | .070 | .023 | 1827 | 1770 | .086 | .029 | 2335 | 1625 | .158 | .046 | 3754 | 2170 | .216 | .064 | 5158 | 2275 |
| | 870 | .580 | .056 | .017 | 1830 | 1770 | .068 | .021 | 2338 | 1625 | .127 | .035 | 3760 | 2170 | .175 | .048 | 5169 | 2275 |
| 1800 | 1750 | .972 | .087 | .028 | 1824 | 1770 | .100 | .035 | 2278 | 1625 | .188 | .058 | 3743 | 2170 | .261 | .079 | 5146 | 2275 |
| | 1170 | .650 | .065 | .019 | 1829 | 1770 | .074 | .024 | 2284 | 1625 | .142 | .039 | 3755 | 2170 | .199 | .053 | 5165 | 2275 |
| | 870 | .483 | .052 | .014 | 1832 | 1770 | .059 | .018 | 2287 | 1625 | .114 | .029 | 3762 | 2170 | .161 | .040 | 5175 | 2275 |
| 2400 | 1750 | .729 | .073 | .021 | 1790 | 1770 | .091 | .027 | 2374 | 1625 | .158 | .042 | 3646 | 2170 | .206 | .057 | 4892 | 2275 |
| | 1170 | .488 | .054 | .014 | 1795 | 1770 | .068 | .018 | 2380 | 1625 | .120 | .028 | 3659 | 2170 | .156 | .038 | 4909 | 2275 |
| | 870 | .363 | .043 | .010 | 1797 | 1770 | .054 | .014 | 2384 | 1625 | .097 | .021 | 3665 | 2170 | .126 | .028 | 4918 | 2275 |
| 3000 | 1750 | .583 | .061 | .016 | 1698 | 1770 | .075 | .021 | 2234 | 1625 | .137 | .033 | 3588 | 2170 | .170 | .043 | 4620 | 2275 |
| | 1170 | .390 | .045 | .011 | 1703 | 1770 | .055 | .014 | 2240 | 1625 | .104 | .019 | 3600 | 2170 | .129 | .029 | 4636 | 2275 |
| | 870 | .290 | .036 | .008 | 1705 | 1770 | .045 | .010 | 2242 | 1625 | .084 | .017 | 3606 | 2170 | .105 | .021 | 4644 | 2275 |
| 3600 | 1750 | .486 | .046 | .012 | 1501 | 1770 | .062 | .016 | 2073 | 1625 | .120 | .026 | 3406 | 2170 | .143 | .033 | 4300 | 2275 |
| | 1170 | .325 | .034 | .008 | 1505 | 1770 | .046 | .011 | 2078 | 1625 | .091 | .018 | 3417 | 2170 | .109 | .022 | 4314 | 2275 |
| | 870 | .242 | .028 | .006 | 1507 | 1770 | .037 | .008 | 2081 | 1625 | .074 | .013 | 3423 | 2170 | .088 | .017 | 4321 | 2275 |

*Note: All torque values listed in inch-pounds, all overhung load values listed in pounds. The point of application of the overhung load is considered to be one shaft diameter measured outward from the gear case housing. See page 52 for extended bearing (Styles DFE, DFEM & DFEMQ) and input shaft*

# Double Reduction

## Worm / Worm Rating Table

| | | | Size 242 | | | | Size 252 | | | | Size 2600 | | | |
|---|---|---|---|---|---|---|---|---|---|---|---|---|---|---|
| Ratio | Input RPM | Output RPM | Input HP | Output HP | Output TQ | OHL | Input HP | Output HP | Output TQ | OHL | Input HP | Output HP | Output TQ | OHL |
| 75 | 1750 | 23.3 | 2.51 | 1.92 | 5199 | 2800 | 4.80 | 3.70 | 10325 | 3100 | 8.89 | 6.97 | 19461 | 3723 |
| | 1170 | 15.6 | 2.10 | 1.55 | 6273 | 2800 | 4.05 | 3.00 | 12505 | 3100 | 6.82 | 5.14 | 21444 | 3723 |
| | 870 | 11.6 | 1.77 | 1.27 | 6891 | 2800 | 3.47 | 2.49 | 13984 | 3100 | 5.49 | 4.02 | 22548 | 3723 |
| 100 | 1750 | 17.5 | 2.51 | 1.85 | 6653 | 2800 | 4.80 | 3.51 | 13053 | 3100 | 7.81 | 5.36 | 19935 | 3723 |
| | 1170 | 11.7 | 2.10 | 1.48 | 7995 | 2800 | 4.05 | 2.83 | 15747 | 3100 | 5.54 | 3.94 | 21936 | 3723 |
| | 870 | 8.70 | 1.77 | 1.21 | 8759 | 2800 | 3.47 | 2.33 | 17474 | 3100 | 4.48 | 3.08 | 23048 | 3723 |
| 150 | 1750 | 11.7 | 2.39 | 1.69 | 9153 | 2930 | 4.27 | 2.98 | 16089 | 2930 | 5.69 | 4.17 | 22529 | 3723 |
| | 1170 | 7.80 | 1.80 | 1.22 | 9866 | 2930 | 3.32 | 2.21 | 17819 | 2930 | 3.11 | 2.93 | 23649 | 3723 |
| | 870 | 5.80 | 1.41 | .926 | 10058 | 2930 | 2.63 | 1.69 | 18346 | 2930 | 3.28 | 2.23 | 24250 | 3723 |
| 200 | 1750 | 8.75 | 1.98 | 1.36 | 9776 | 3010 | 3.63 | 2.44 | 17573 | 3370 | 4.64 | 3.20 | 23029 | 3723 |
| | 1170 | 5.85 | 1.42 | .933 | 10053 | 3010 | 2.66 | 1.70 | 18332 | 3370 | 2.55 | 2.24 | 24157 | 3723 |
| | 870 | 4.35 | 1.10 | .704 | 10199 | 3010 | 2.09 | 1.29 | 18738 | 3370 | 2.70 | 1.71 | 24762 | 3723 |
| 250 | 1750 | 7.00 | 1.61 | 1.06 | 9566 | 3010 | 3.10 | 1.96 | 17654 | 3370 | 3.96 | 2.57 | 23137 | 3723 |
| | 1170 | 4.68 | 1.16 | .729 | 9822 | 3010 | 2.28 | 1.37 | 18413 | 3370 | 2.18 | 1.80 | 24264 | 3723 |
| | 870 | 3.48 | .903 | .550 | 9957 | 3010 | 1.81 | 1.04 | 18818 | 3370 | 2.32 | 1.37 | 24869 | 3723 |
| 300 | 1750 | 5.83 | 1.44 | .930 | 10053 | 3190 | 2.66 | 1.70 | 18332 | 3560 | 3.40 | 2.24 | 24239 | 3723 |
| | 1170 | 3.90 | 1.03 | .634 | 10244 | 3190 | 1.93 | 1.17 | 18861 | 3560 | 2.45 | 1.54 | 24835 | 3723 |
| | 870 | 2.90 | .797 | .476 | 10343 | 3190 | 1.51 | .881 | 19138 | 3560 | 1.91 | 1.16 | 25148 | 3723 |
| 400 | 1750 | 4.38 | 1.15 | .708 | 10197 | 3320 | 2.16 | 1.30 | 18731 | 3560 | 2.80 | 1.72 | 24752 | 3723 |
| | 1170 | 2.93 | .824 | .480 | 10340 | 3320 | 1.56 | .888 | 19131 | 3560 | 2.02 | 1.18 | 25351 | 3723 |
| | 870 | 2.18 | .640 | .360 | 10416 | 3320 | 1.22 | .668 | 19342 | 3560 | 1.59 | .886 | 25666 | 3723 |
| 500 | 1750 | 3.50 | .967 | .571 | 10283 | 3445 | 1.83 | 1.05 | 18972 | 3560 | 2.36 | 1.40 | 25111 | 3723 |
| | 1170 | 2.34 | .688 | .386 | 10399 | 3445 | 1.32 | .716 | 19295 | 3560 | 1.71 | .950 | 25596 | 3723 |
| | 870 | 1.74 | .534 | .289 | 10459 | 3445 | 1.03 | .537 | 19465 | 3560 | 1.34 | .714 | 25851 | 3723 |
| 600 | 1750 | 2.92 | .854 | .478 | 10340 | 3550 | 1.60 | .885 | 19131 | 3560 | 2.10 | 1.17 | 25351 | 3723 |
| | 1170 | 1.95 | .612 | .320 | 10438 | 3550 | 1.15 | .600 | 19405 | 3560 | 1.52 | .797 | 25761 | 3723 |
| | 870 | 1.45 | .477 | .241 | 10489 | 3550 | .897 | .450 | 19547 | 3560 | 1.20 | .598 | 25975 | 3723 |
| 750 | 1750 | 2.33 | .742 | .379 | 10245 | 3445 | 1.38 | .711 | 19211 | 3560 | 1.82 | .943 | 25457 | 3723 |
| | 1170 | 1.56 | .532 | .257 | 10365 | 3445 | .998 | .482 | 19485 | 3560 | 1.32 | .640 | 25868 | 3723 |
| | 870 | 1.16 | .415 | .192 | 10428 | 3445 | .782 | .361 | 19627 | 3560 | 1.04 | .480 | 26081 | 3723 |
| 900 | 1750 | 1.94 | .657 | .318 | 10305 | 3550 | 1.24 | .593 | 19222 | 3560 | 1.54 | .785 | 25450 | 3723 |
| | 1170 | 1.30 | .475 | .215 | 10406 | 3550 | .895 | .402 | 19495 | 3560 | 1.12 | .529 | 25658 | 3723 |
| | 870 | .967 | .371 | .160 | 10458 | 3550 | .703 | .301 | 19637 | 3560 | .884 | .395 | 25766 | 3723 |
| 1000 | 1750 | 1.75 | .607 | .284 | 10211 | 3445 | 1.15 | .539 | 19418 | 3560 | 1.46 | .718 | 25846 | 3723 |
| | 1170 | 1.17 | .437 | .192 | 10324 | 3445 | .832 | .364 | 19624 | 3560 | 1.06 | .484 | 26095 | 3723 |
| | 870 | .870 | .341 | .143 | 10383 | 3445 | .654 | .272 | 19729 | 3560 | .834 | .362 | 26224 | 3723 |
| 1200 | 1750 | 1.46 | .541 | .240 | 10381 | 3715 | 1.03 | .450 | 19428 | 3560 | 1.28 | .601 | 25969 | 3723 |
| | 1170 | .975 | .392 | .162 | 10457 | 3715 | .748 | .304 | 19633 | 3560 | .935 | .405 | 26179 | 3723 |
| | 870 | .725 | .310 | .121 | 10496 | 3715 | .589 | .227 | 19738 | 3560 | .739 | .302 | 26287 | 3723 |
| 1500 | 1750 | 1.17 | .460 | .193 | 10427 | 3730 | .866 | .363 | 19624 | 3570 | 1.12 | .483 | 26076 | 3723 |
| | 1170 | .780 | .333 | .130 | 10488 | 3730 | .632 | .245 | 19763 | 3570 | .816 | .325 | 26285 | 3723 |
| | 870 | .580 | .267 | .097 | 10519 | 3730 | .505 | .183 | 19835 | 3570 | .646 | .243 | 26393 | 3723 |
| 1800 | 1750 | .972 | .420 | .161 | 10457 | 3730 | .779 | .303 | 19633 | 3570 | 1.00 | .401 | 26022 | 3723 |
| | 1170 | .650 | .311 | .108 | 10508 | 3730 | .570 | .204 | 19772 | 3570 | .734 | .271 | 26232 | 3723 |
| | 870 | .483 | .249 | .081 | 10535 | 3730 | .456 | .152 | 19844 | 3570 | .583 | .202 | 26340 | 3723 |
| 2400 | 1750 | .729 | .346 | .120 | 10411 | 3730 | .662 | .225 | 19401 | 3570 | .821 | .303 | 26181 | 3723 |
| | 1170 | .488 | .258 | .081 | 10459 | 3730 | .486 | .151 | 19538 | 3570 | .625 | .201 | 25986 | 3723 |
| | 870 | .363 | .206 | .060 | 10484 | 3730 | .391 | .113 | 19608 | 3570 | .497 | .150 | 26092 | 3723 |
| 3000 | 1750 | .583 | .282 | .091 | 9805 | 3730 | .579 | .174 | 18822 | 3570 | .691 | .235 | 25350 | 3723 |
| | 1170 | .390 | .211 | .061 | 9848 | 3730 | .427 | .117 | 18955 | 3570 | .548 | .156 | 25211 | 3723 |
| | 870 | .290 | .169 | .045 | 9870 | 3730 | .345 | .088 | 19024 | 3570 | .437 | .117 | 25314 | 3723 |
| 3600 | 1750 | .486 | .235 | .070 | 9103 | 3730 | .510 | .138 | 17865 | 3570 | .653 | .183 | 23679 | 3723 |
| | 1170 | .325 | .177 | .047 | 9141 | 3730 | .377 | .093 | 17991 | 3570 | .484 | .123 | 23869 | 3723 |
| | 870 | .242 | .142 | .035 | 9161 | 3730 | .305 | .069 | 18056 | 3570 | .386 | .092 | 23967 | 3723 |

*Note: All torque values listed in inch-pounds, all overhung load values listed in pounds. The point of application of the overhung load is considered to be one shaft diameter measured outward from the gear case housing. See page 52 for extended bearing (Styles DFE, DFEM & DFEMQ) and input shaft overhung load (OHL) capacity. At speeds above 1750 RPM, units may become*

# Double Reduction

## Worm / Worm Rating Table

| | | | Size 2700 | | | | Size 2800 | | | | Size 21000 | | | |
|---|---|---|---|---|---|---|---|---|---|---|---|---|---|---|
| Ratio | Input RPM | Output RPM | Input HP | Output HP | Output TQ | OHL | Input HP | Output HP | Output TQ | OHL | Input HP | Output HP | Output TQ | OHL |
| 75 | 1750 | 23.1 | 9.13 | 7.55 | 20601 | 6209 | 15.5 | 13.0 | 35507 | 7761 | 26.5 | 22.5 | 61010 | 11028 |
| | 1170 | 15.4 | 7.69 | 6.16 | 25161 | 6209 | 12.0 | 9.78 | 39931 | 7761 | 20.4 | 16.9 | 68348 | 11028 |
| | 870 | 11.5 | 6.80 | 5.32 | 29208 | 6209 | 9.57 | 7.61 | 41787 | 7761 | 16.3 | 13.2 | 72067 | 11028 |
| 100 | 1750 | 16.5 | 9.13 | 7.22 | 27535 | 6209 | 12.6 | 10.1 | 38575 | 7761 | 20.8 | 17.0 | 64363 | 11028 |
| | 1170 | 11.0 | 7.04 | 5.37 | 30607 | 6209 | 9.55 | 7.40 | 42191 | 7761 | 16.2 | 12.8 | 72302 | 11028 |
| | 870 | 8.21 | 5.61 | 4.16 | 31879 | 6209 | 7.64 | 5.76 | 44192 | 7761 | 13.0 | 10.0 | 76335 | 11028 |
| 150 | 1750 | 11.4 | 7.25 | 5.53 | 30621 | 6209 | 9.82 | 7.62 | 42212 | 7761 | 16.5 | 13.0 | 72069 | 11028 |
| | 1170 | 7.61 | 5.31 | 3.90 | 32270 | 6209 | 7.23 | 5.41 | 44811 | 7761 | 12.3 | 9.38 | 77678 | 11028 |
| | 870 | 5.66 | 4.18 | 2.98 | 33158 | 6209 | 5.71 | 4.15 | 46217 | 7761 | 9.78 | 7.25 | 80749 | 11028 |
| 200 | 1750 | 8.54 | 5.81 | 4.32 | 31857 | 6209 | 7.92 | 5.98 | 44158 | 7761 | 13.5 | 10.3 | 76261 | 11028 |
| | 1170 | 5.71 | 4.21 | 3.00 | 33136 | 6209 | 5.75 | 4.18 | 46181 | 7761 | 9.93 | 7.31 | 80671 | 11028 |
| | 870 | 4.24 | 3.29 | 2.28 | 33817 | 6209 | 4.50 | 3.18 | 47264 | 7761 | 7.83 | 5.59 | 83051 | 11028 |
| 250 | 1750 | 7.14 | 4.90 | 3.54 | 31238 | 6209 | 6.61 | 4.88 | 43010 | 7761 | 11.3 | 8.45 | 74571 | 11028 |
| | 1170 | 4.78 | 3.55 | 2.46 | 32432 | 6209 | 4.80 | 3.40 | 44863 | 7761 | 8.31 | 5.96 | 78638 | 11028 |
| | 870 | 3.55 | 2.77 | 1.86 | 33067 | 6209 | 3.76 | 2.58 | 45852 | 7761 | 6.55 | 4.55 | 80828 | 11028 |
| 300 | 1750 | 5.69 | 4.27 | 2.99 | 33136 | 6209 | 5.82 | 4.17 | 46181 | 7761 | 10.1 | 7.29 | 80671 | 11028 |
| | 1170 | 3.80 | 3.06 | 2.05 | 34024 | 6209 | 4.19 | 2.87 | 47593 | 7761 | 7.29 | 5.06 | 83779 | 11028 |
| | 870 | 2.83 | 2.39 | 1.55 | 34489 | 6209 | 3.26 | 2.17 | 48334 | 7761 | 5.71 | 3.84 | 85419 | 11028 |
| 400 | 1750 | 4.27 | 3.41 | 2.29 | 33805 | 6209 | 4.65 | 3.20 | 47245 | 7761 | 8.12 | 5.62 | 83011 | 11028 |
| | 1170 | 2.85 | 2.43 | 1.56 | 34477 | 6209 | 3.33 | 2.19 | 48316 | 7761 | 5.85 | 3.87 | 85377 | 11028 |
| | 870 | 2.12 | 2.10 | 1.17 | 34830 | 6209 | 2.59 | 1.65 | 48879 | 7761 | 4.58 | 2.92 | 86628 | 11028 |
| 500 | 1750 | 3.41 | 2.86 | 1.85 | 34209 | 6209 | 3.88 | 2.60 | 45835 | 7761 | 6.89 | 4.57 | 84431 | 11028 |
| | 1170 | 2.28 | 2.04 | 1.26 | 34752 | 6209 | 2.78 | 1.77 | 46812 | 7761 | 4.96 | 3.13 | 86351 | 11028 |
| | 870 | 1.70 | 1.59 | .944 | 35036 | 6209 | 2.16 | 1.33 | 47326 | 7761 | 3.88 | 2.35 | 87361 | 11028 |
| 600 | 1750 | 2.85 | 2.53 | 1.56 | 34477 | 6209 | 3.43 | 2.18 | 48316 | 7761 | 6.03 | 3.86 | 85377 | 11028 |
| | 1170 | 1.90 | 1.81 | 1.06 | 34936 | 6209 | 2.46 | 1.48 | 49049 | 7761 | 4.34 | 2.63 | 87006 | 11028 |
| | 870 | 1.41 | 1.42 | .79 | 35174 | 6209 | 1.92 | 1.11 | 49429 | 7761 | 3.40 | 1.97 | 87854 | 11028 |
| 750 | 1750 | 2.38 | 2.13 | 1.27 | 33682 | 6209 | 2.87 | 1.77 | 46812 | 7761 | 5.04 | 3.13 | 82964 | 11028 |
| | 1170 | 1.59 | 1.53 | .862 | 34109 | 6209 | 2.05 | 1.20 | 47481 | 7761 | 3.63 | 2.13 | 84459 | 11028 |
| | 870 | 1.18 | 1.20 | .645 | 34331 | 6209 | 1.60 | .898 | 47827 | 7761 | 2.85 | 1.60 | 85236 | 11028 |
| 900 | 1750 | 1.98 | 1.73 | 1.01 | 32016 | 6209 | 2.50 | 1.47 | 46627 | 7761 | 4.13 | 2.49 | 79353 | 11028 |
| | 1170 | 1.32 | 1.24 | .679 | 32391 | 6209 | 1.80 | .991 | 46972 | 7761 | 2.97 | 1.69 | 80681 | 11028 |
| | 870 | .983 | .972 | .508 | 32585 | 6209 | 1.42 | .740 | 47150 | 7761 | 2.33 | 1.27 | 81371 | 11028 |
| 1000 | 1750 | 1.75 | 1.73 | .949 | 35031 | 6209 | 2.34 | 1.33 | 49201 | 7761 | 4.21 | 2.37 | 87344 | 11028 |
| | 1170 | 1.17 | 1.24 | .640 | 35308 | 6209 | 1.68 | .899 | 49644 | 7761 | 3.05 | 1.60 | 88332 | 11028 |
| | 870 | .87 | .976 | .477 | 35452 | 6209 | 1.32 | .672 | 49874 | 7761 | 2.41 | 1.20 | 88847 | 11028 |
| 1200 | 1750 | 1.42 | 1.52 | .794 | 35168 | 6209 | 2.05 | 1.12 | 49420 | 7761 | 3.73 | 1.98 | 87832 | 11028 |
| | 1170 | .951 | 1.10 | .534 | 35402 | 6209 | 1.48 | .752 | 49793 | 7761 | 2.72 | 1.34 | 88666 | 11028 |
| | 870 | .707 | .871 | .399 | 35522 | 6209 | 1.16 | .561 | 49986 | 7761 | 2.15 | 1.00 | 89097 | 11028 |
| 1500 | 1750 | 1.19 | 1.28 | .648 | 34325 | 6209 | 1.71 | .903 | 47819 | 7761 | 3.13 | 1.61 | 85216 | 11028 |
| | 1170 | .796 | .929 | .436 | 34542 | 6209 | 1.23 | .608 | 48159 | 7761 | 2.28 | 1.09 | 85980 | 11028 |
| | 870 | .592 | .739 | .325 | 34654 | 6209 | .979 | .454 | 48334 | 7761 | 1.81 | .811 | 86375 | 11028 |
| 1800 | 1750 | .989 | 1.04 | .511 | 32580 | 6209 | 1.29 | .674 | 42944 | 7761 | 2.56 | 1.28 | 81353 | 11028 |
| | 1170 | .661 | .755 | .344 | 32770 | 6209 | .928 | .453 | 43207 | 7761 | 1.86 | .860 | 82031 | 11028 |
| | 870 | .492 | .603 | .256 | 32868 | 6209 | .738 | .338 | 43342 | 7761 | 1.48 | .643 | 82381 | 11028 |
| 2400 | 1750 | .729 | .899 | .389 | 33661 | 6209 | 1.20 | .544 | 46987 | 7761 | 2.17 | .964 | 83314 | 11028 |
| | 1170 | .488 | .654 | .262 | 33868 | 6209 | .869 | .366 | 47314 | 7761 | 1.59 | .650 | 84037 | 11028 |
| | 870 | .363 | .525 | .195 | 33975 | 6209 | .694 | .273 | 47482 | 7761 | 1.26 | .486 | 84411 | 11028 |
| 3000 | 1750 | .583 | .758 | .301 | 32512 | 6209 | 1.02 | .423 | 45708 | 7761 | 1.83 | .780 | 80836 | 11028 |
| | 1170 | .390 | .554 | .202 | 32710 | 6209 | .743 | .285 | 46025 | 7761 | 1.35 | .505 | 81535 | 11028 |
| | 870 | .290 | .446 | .151 | 32813 | 6209 | .595 | .213 | 46189 | 7761 | 1.08 | .377 | 81896 | 11028 |
| 3600 | 1750 | .486 | .598 | .226 | 29307 | 6209 | .801 | .317 | 41112 | 7761 | 1.46 | .565 | 73284 | 11028 |
| | 1170 | .325 | .437 | .152 | 29473 | 6209 | .583 | .213 | 41376 | 7761 | 1.07 | .381 | 73877 | 11028 |
| | 870 | .242 | .353 | .113 | 29558 | 6209 | .470 | .159 | 41512 | 7761 | .856 | .285 | 74183 | 11028 |

*Note: All torque values listed in inch-pounds, all overhung load values listed in pounds. The point of application of the overhung load is considered to be one shaft diameter measured outward from the gear case housing. See page 52 for extended bearing (Styles DFE, DFEM & DFEMO) and input shaft*

# Double Reduction

## Worm / Worm Thrust & Overhung Load Ratings

*Low Speed Shaft*

### Thrust Ratings - *Double Reduction Worm/Worm (LBS.)*

| Unit Size | 213 | 215 | 218 | 220 | 224 | 226 | 230 | 232 | 242 | 252 | 2600 | 2700 | 2800 | 21000 |
|---|---|---|---|---|---|---|---|---|---|---|---|---|---|---|
| All Ratios | 1144 | 1144 | 1144 | 1144 | 2091 | 2091 | 2574 | 2574 | 2533 | 3412 | 3990 | 4009 | 4777 | 6808 |

### Extended Bearing Design Output Shaft Overhung Load Capacity (LBS.)

| Unit Size | 230 | 232 | 242 | 252 | 2600 | 2700 | 2800 | 21000 |
|---|---|---|---|---|---|---|---|---|
| O.H.L. Capacity | 605 | 959 | 1200 | 2524 | 2245 | 3791 | 4850 | 8500 |

*O.H.L. = Overhung Load*
*Note: Load located at end of output shaft*

### High Speed Shaft Overhung Load Capacity (LBS.)

| Unit Size | 213 | 215 | 218 | 220 | 224 | 226 | 230 | 232 | 242 | 252 | 2600 | 2700 | 2800 | 21000 |
|---|---|---|---|---|---|---|---|---|---|---|---|---|---|---|
| O.H.L. Capacity | 75 | 75 | 75 | 75 | 75 | 75 | 75 | 75 | 75 | 125 | 150 | 150 | 175 | 300 |

*O.H.L. = Overhung Load*
*Note: The point of application of the overhung load is considered to be one shaft diameter measured outward from the gear case housing.*

### Hollow Output Shaft Bore Sizes

| Fract. Size | Decimal Equiv. | KWY* | 213 | 215 | 218 | 220 | 224 | 226 | 230 | 232 | 242 | 252 | 2600 | 2700 | 2800 | 21000 |
|---|---|---|---|---|---|---|---|---|---|---|---|---|---|---|---|---|
| 5/8 | .625 | 3/16 x 3/32 | * | * | * | | | | | | | | | | | |
| 11/16 | .688 | 3/16 x 3/32 | | | * | | | | | | | | | | | |
| 3/4 | .750 | 3/16 x 3/32 | | | * | | | | | | | | | | | |
| 7/8 | .875 | 3/16 x 3/32 | | | * | | | | | | | | | | | |
| 1 | 1.000 | 1/4 x 1/8 | | | * | * | * | * | | | | | | | | |
| 1-1/8 | 1.125 | 1/4 x 1/8 | | | | * | * | * | | | | | | | | |
| 1-3/16 | 1.188 | 1/4 x 1/8 | | | | * | * | * | * | * | | | | | | |
| 1-1/4 | 1.250 | 1/4 x 1/8 | | | | * | * | * | * | * | | | | | | |
| 1-7/16 | 1.438 | 3/8 x 3/16 | | | | * | * | * | * | * | * | | | | | |
| 1-1/2 | 1.500 | 3/8 x 3/16 | | | | | | | * | * | * | | | | | |
| 1-5/8 | 1.625 | 3/8 x 3/16 | | | | | | | * | * | * | | | | | |
| 1-11/16 | 1.688 | 3/8 x 3/16 | | | | | | | * | * | * | | | | | |
| 1-3/4 | 1.750 | 3/8 x 3/16 | | | | | | | * | * | * | | | | | |
| 1-7/8 | 1.875 | 1/2 x 1/4 | | | | | | | | | * | | | | | |
| 1-15/16 | 1.938 | 1/2 x 1/4 | | | | | | | * | * | * | | | | | |
| 2 | 2.000 | 1/2 x 1/4 | | | | | | | | | * | * | * | | | |
| 2-3/16 | 2.188 | 1/2 x 1/4 | | | | | | | | | * | * | * | | | |
| 2-1/4 | 2.250 | 1/2 x 1/4 | | | | | | | | | | * | * | | | |
| 2-7/16 | 2.438 | 5/8 x 5/16 | | | | | | | | | | * | * | * | | |
| 2-1/2 | 2.500 | 5/8 x 5/16 | | | | | | | | | | * | * | * | | |
| 2-11/16 | 2.688 | 5/8 x 5/16 | | | | | | | | | | * | * | * | | |
| 2-15/16 | 2.938 | 3/4 x 3/8 | | | | | | | | | | * | * | * | | |
| 3 | 3.000 | 3/4 x 3/8 | | | | | | | | | | * | * | * | | |
| 3-3/16 | 3.188 | 3/4 x 3/8 | | | | | | | | | | * | * | | | |
| 3-7/16 | 3.438 | 7/8 x 7/16 | | | | | | | | | | * | * | * | * | * |
| 3-15/16 | 3.938 | 1 x 1/2 | | | | | | | | | | | | * | * | * |
| 4-3/16 | 4.188 | 1 x 1/2 | | | | | | | | | | | | | * | |
| 4-7/16 | 4.438 | 1 x 1/2 | | | | | | | | | | | | | * | * |
| 4-15/16 | 4.938 | 1-1/4 x 5/8 | | | | | | | | | | | | | | * |
| 5-7/16 | 5.438 | 1-1/4 x 5/8 | | | | | | | | | | | | | | * |

**Dimensions refer to driven shaft.*
*Note: Special bores are available upon request. Consult factory for information.*

# Dimension Sheet Index
# Double Reduction Worm/Worm


| Style | Page |
|---|---|
| D, DM, DMQ | 54 - 55 |
| DT, DTM, DTMQ | 56 - 57 |
| DU, DUM, DUMQ | 58 - 59 |
| DV*(L or H)*, DV*(L or H)*M, DV*(L or H)*MQ | 60 - 61 |
| DJ, DJM, DJMQ | 62 - 63 |
| DF, DFM, DFMQ | 64 - 65 |
| DH, DHM, DHMQ | 66 - 67 |
| DFH, DFHM, DFHMQ | 68 - 69 |
| DFE, DFEM, DFEMQ | 70 - 71 |


Contact factory for dimensions of styles not listed.

Note: All dimensions shown in dimension sheets are for reference only.
Contact factory for certified dimensions.

WARNING For safety, purchaser or user should provide protective guards over shaft extensions and any couplings, sheaves and belts, sprockets and chains, etc., mounted thereon.

# Double Reduction

## Worm / Worm Dimensions

### Style D

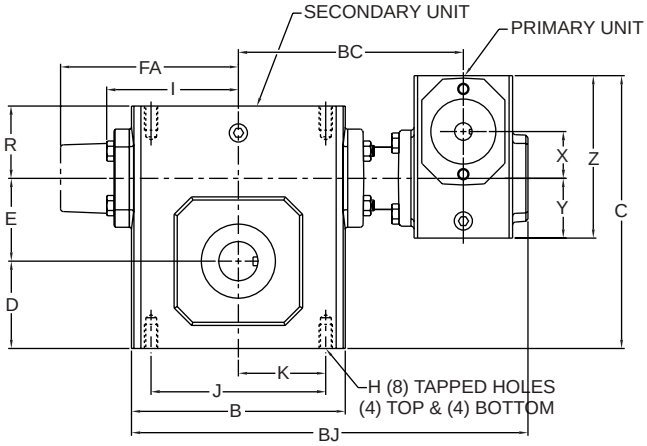


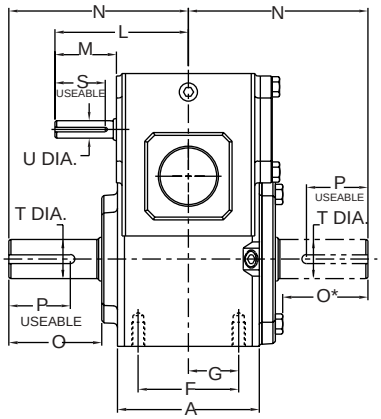


### Styles DMQ & DM

STYLE DMQ
(NEMA AND IEC B5 METRIC MOTORS)

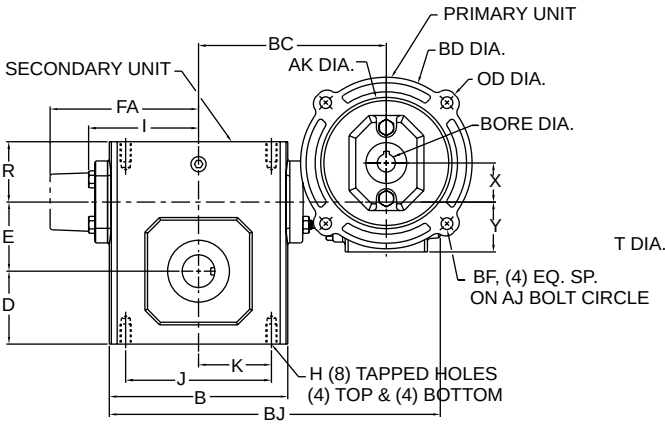


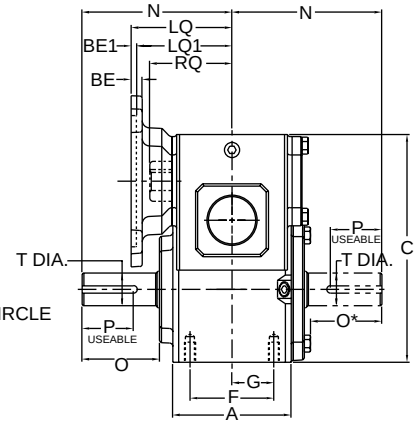


STYLE DM
(NEMA MOTORS ONLY)

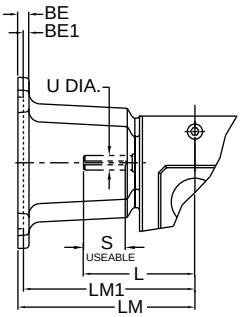


### Assemblies

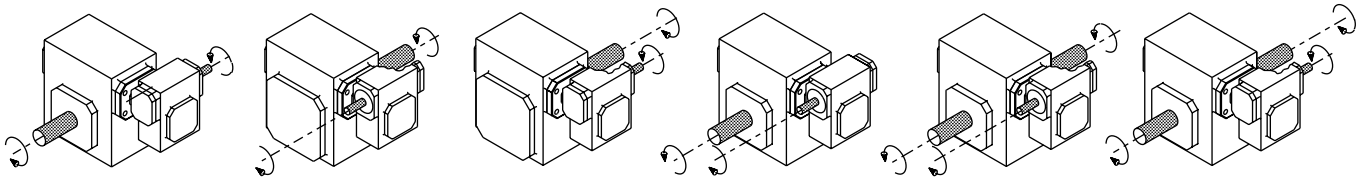

1 2 3 4 5 6

*Note: The input shaft may be rotated in either direction. Units are for mounting as shown. Contact factory for other mountings. Assembly positions also apply to motor flange units ("MQ" and "M").* ***See page 72 for additional assembly options.***

# Double Reduction

## Styles D, DMQ, DM

| UNIT | A | B | BC | BJ | C | D | E | F | FA | G | H | H Depth | I | J | K | L | M | N | O |
|---|---|---|---|---|---|---|---|---|---|---|---|---|---|---|---|---|---|---|---|
| 213 | 2.82 | 3.80 | 5.32 | 9.06 | 5.99 | 1.72 | 1.333 | 2.00 | N/A | 1.00 | 5/16-18 | .50 | 2.61 | 3.25 | 1.63 | 3.82 | 1.76 | 4.00 | 2.16 |
| 215 | 3.44 | 4.88 | 5.85 | 10.13 | 6.38 | 1.91 | 1.540 | 2.75 | N/A | 1.38 | 5/16-18 | .63 | 3.14 | 4.19 | 2.09 | 3.82 | 1.76 | 4.31 | 2.11 |
| 218 | 3.56 | 5.06 | 5.94 | 10.32 | 6.75 | 2.06 | 1.750 | 2.75 | N/A | 1.38 | 5/16-18 | .63 | 3.24 | 4.19 | 2.09 | 3.82 | 1.76 | 4.31 | 2.05 |
| 220 | 3.81 | 5.80 | 6.32 | 11.06 | 7.28 | 2.28 | 2.063 | 3.00 | N/A | 1.50 | 5/16-18 | .63 | 3.61 | 4.75 | 2.38 | 3.82 | 1.76 | 4.68 | 2.29 |
| 224 | 4.06 | 6.12 | 6.44 | 11.35 | 7.81 | 2.50 | 2.375 | 2.88 | N/A | 1.44 | 3/8-16 | .69 | 3.77 | 5.00 | 2.50 | 3.82 | 1.76 | 5.14 | 2.66 |
| 226 | 4.84 | 7.12 | 7.01 | 12.41 | 8.50 | 2.94 | 2.625 | 3.38 | N/A | 1.69 | 3/8-16 | .69 | 4.34 | 6.38 | 3.19 | 3.82 | 1.76 | 5.63 | 2.73 |
| 230 | 5.25 | 8.12 | 7.86 | 14.12 | 9.72 | 3.25 | 3.000 | 4.00 | N/A | 2.00 | 7/16-14 | .88 | 4.84 | 7.00 | 3.50 | 4.35 | 1.76 | 6.75 | 3.60 |
| 232 | 5.75 | 8.50 | 8.05 | 14.50 | 10.22 | 3.50 | 3.250 | 4.00 | N/A | 2.00 | 7/16-14 | .88 | 5.02 | 7.50 | 3.75 | 4.35 | 1.76 | 7.06 | 3.66 |
| 242 | 6.13 | 10.25 | 9.18 | 16.69 | 12.78 | 4.44 | 4.250 | 5.00 | N/A | 2.50 | 5/8-11 | 1.00 | 6.10 | 8.50 | 4.25 | 4.82 | 1.76 | 8.12 | 4.50 |
| 252 | 7.19 | 13.00 | 11.57 | 20.97 | 15.43 | 5.12 | 5.250 | 5.81 | N/A | 2.91 | 5/8-11 | 1.25 | 7.50 | 11.00 | 5.50 | 6.07 | 2.38 | 9.06 | 4.78 |
| 2600 | 8.13 | 14.25 | 13.30 | 23.82 | 18.38 | 6.50 | 6.000 | 6.38 | 10.24 | 3.19 | 5/8-11 | 1.00 | N/A | 12.75 | 6.38 | 6.76 | 2.38 | 10.00 | 4.66 |
| 2700 | 7.63 | 14.88 | 12.96 | 24.33 | 20.46 | 7.59 | 7.000 | 5.50 | 10.63 | 2.75 | 1-8 | 1.56 | N/A | 12.50 | 6.25 | 6.76 | 2.38 | 11.76 | 5.69 |
| 2800 | 8.63 | 17.00 | 13.94 | 26.69 | 23.79 | 8.86 | 8.000 | 6.50 | 11.93 | 3.25 | 1-8 | 1.66 | N/A | 14.25 | 7.13 | 9.57 | 3.47 | 12.25 | 6.02 |
| 21000 | 9.53 | 20.88 | 17.05 | 32.74 | 29.24 | 10.36 | 10.000 | 6.88 | 14.34 | 3.44 | 1 1/4-7 | 2.04 | N/A | 17.75 | 8.88 | 10.88 | 3.38 | 14.75 | 6.80 |

| UNIT | O* | P** | R | S** | T Dia. | U Dia. | X | Y | Z |
|---|---|---|---|---|---|---|---|---|---|
| 213 | 1.94 | 3/16 x 1.50 | 1.61 | 1/8 x 1.44 | .625 | .500 | 1.333 | 1.72 | 4.66 |
| 215 | 1.90 | 3/16 x 1.50 | 1.93 | 1/8 x 1.44 | .750 | .500 | 1.333 | 1.72 | 4.66 |
| 218 | 1.84 | 3/16 x 1.38 | 1.94 | 1/8 x 1.44 | .875 | .500 | 1.333 | 1.72 | 4.66 |
| 220 | 2.08 | 1/4 x 1.44 | 2.03 | 1/8 x 1.44 | 1.000 | .500 | 1.333 | 1.72 | 4.66 |
| 224 | 2.44 | 1/4 x 1.75 | 2.06 | 1/8 x 1.44 | 1.125 | .500 | 1.333 | 1.72 | 4.66 |
| 226 | 2.52 | 1/4 x 2.00 | 2.44 | 1/8 x 1.44 | 1.250 | .500 | 1.333 | 1.72 | 4.66 |
| 230 | 3.36 | 1/4 X 2.25 | 2.63 | 3/16 x 1.50 | 1.250 | .625 | 1.540 | 1.91 | 5.38 |
| 232 | 3.42 | 3/8 X 2.62 | 2.63 | 3/16 x 1.50 | 1.500 | .625 | 1.540 | 1.91 | 5.38 |
| 242 | 4.21 | 1/2 X 3.06 | 2.69 | 3/16 x 1.50 | 1.875 | .625 | 2.063 | 2.28 | 6.38 |
| 252 | 4.53 | 1/2 x 3.50 | 3.63 | 3/16 x 1.75 | 2.000 | .750 | 2.625 | 2.94 | 8.00 |
| 2600 | 4.66 | 5/8 x 4.00 | 4.00 | 3/16 x 1.75 | 2.500 | .875 | 3.250 | 3.50 | 9.38 |
| 2700 | 5.69 | 5/8 x 4.00 | 4.33 | 3/16 x 1.75 | 2.750 | .875 | 3.250 | 3.50 | 9.38 |
| 2800 | 6.02 | 3/4 x 4.50 | 4.11 | 1/4 x 2.88 | 3.000 | 1.250 | 4.250 | 4.44 | 11.38 |
| 21000 | 6.80 | 7/8 x 5.00 | 5.12 | 1/4 x 3.00 | 3.750 | 1.250 | 5.250 | 5.12 | 14.00 |

**applies to double output shaft*
***keyway width by length*

*Note: All dimensions listed are for reference only. Contact factory for certified dimensions.*

WARNING *For safety, purchaser or user should provide protective guards over shaft extensions and any couplings, sheaves and belts, sprockets and chains, etc., mounted thereon.*

## NEMA Motor Data

### NEMA Motor Mounting Dimensions

| Frame | AJ | AK | BD | OD | BE | BE1 | BORE | KWY.** | BF |
|---|---|---|---|---|---|---|---|---|---|
| 48CZ | 3.75 | 3.00 | 3.88 | 4.36 | .38 | N/A | .500 | 1/8 x 1/16 | .28 |
| 56C | 5.88 | 4.50 | 5.88 | 6.64 | .38 | N/A | .625 | 3/16 x 3/32 | .41 |
| 140TC | 5.88 | 4.50 | 5.88 | 6.64 | .38 | N/A | .875 | 3/16 x 3/32 | .41 |
| 180TC | 7.25 | 8.50 | 9.00 | N/A | N/A | .50 | 1.125 | 1/4 x 1/8 | .53 |
| 210TC | 7.25 | 8.50 | 9.00 | N/A | N/A | .50 | 1.375 | 5/16 x 5/32 | .53 |
| 250TC | 7.25 | 8.50 | 9.00 | N/A | N/A | .50 | 1.625 | 3/8 x 3/16 | .53 |

***keyway width by depth*

### NEMA Motor Flange Face Locations

| | 48CZ | | | 56C/140TC | | | 180TC | | | 210TC | | | 250TC | | |
|---|---|---|---|---|---|---|---|---|---|---|---|---|---|---|---|
| UNIT | LM | RQ | LQ | LM | RQ | LQ | LM1 | RQ | LQ1 | LM1 | RQ | LQ1 | LM1 | RQ | LQ1 |
| 213 | 5.63 | 3.09 | 3.46 | 6.07 | 3.09 | 3.46 | N/A | N/A | N/A | N/A | N/A | N/A | N/A | N/A | N/A |
| 215 | 5.63 | 3.09 | 3.46 | 6.07 | 3.09 | 3.46 | N/A | N/A | N/A | N/A | N/A | N/A | N/A | N/A | N/A |
| 218 | 5.63 | 3.09 | 3.46 | 6.07 | 3.09 | 3.46 | N/A | N/A | N/A | N/A | N/A | N/A | N/A | N/A | N/A |
| 220 | 5.63 | 3.09 | 3.46 | 6.07 | 3.09 | 3.46 | N/A | N/A | N/A | N/A | N/A | N/A | N/A | N/A | N/A |
| 224 | 5.63 | 3.09 | 3.46 | 6.07 | 3.09 | 3.46 | N/A | N/A | N/A | N/A | N/A | N/A | N/A | N/A | N/A |
| 226 | 5.63 | 3.09 | 3.46 | 6.07 | 3.09 | 3.46 | N/A | N/A | N/A | N/A | N/A | N/A | N/A | N/A | N/A |
| 230 | 6.16 | 3.62 | 3.99 | 6.60 | 3.62 | 3.99 | N/A | N/A | N/A | N/A | N/A | N/A | N/A | N/A | N/A |
| 232 | 6.16 | 3.62 | 3.99 | 6.60 | 3.62 | 3.99 | N/A | N/A | N/A | N/A | N/A | N/A | N/A | N/A | N/A |
| 242 | 6.63 | 4.06 | 4.46 | 7.07 | 4.06 | 4.46 | N/A | N/A | N/A | N/A | N/A | N/A | N/A | N/A | N/A |
| 252 | N/A | N/A | N/A | 8.32 | 4.82 | 5.19 | 9.32 | 5.13 | 5.62 | 9.32 | N/A | N/A | N/A | N/A | N/A |
| 2600 | N/A | N/A | N/A | 9.01 | 5.51 | 5.88 | 10.01 | 5.81 | 6.31 | 10.01 | 6.25 | 6.75 | N/A | N/A | N/A |
| 2700 | N/A | N/A | N/A | 9.01 | 5.51 | 5.88 | 10.01 | 5.81 | 6.31 | 10.01 | 6.25 | 6.75 | N/A | N/A | N/A |
| 2800 | N/A | N/A | N/A | 11.81 | 6.04 | 6.45 | 12.90 | 6.68 | 7.21 | 12.90 | 6.68 | 7.21 | 13.46 | 7.24 | 7.77 |
| 21000 | N/A | N/A | N/A | 13.21 | 7.35 | 7.85 | 14.30 | 7.98 | 8.61 | 14.30 | 7.98 | 8.61 | 14.86 | 8.54 | 9.17 |

### IEC B5 & B3/B5 Metric Motor Flange Face Locations

| | D63D | | D71D | | D80D | | D90D | | D100LD D112MD | | D132D | |
|---|---|---|---|---|---|---|---|---|---|---|---|---|
| UNIT | LQ | RQ | LQ | RQ | LQ | RQ | LQ | RQ | LQ | RQ | LQ | RQ |
| 213 | 2.62 | 2.45 | 2.65 | 2.47 | 2.89 | 2.71 | N/A | N/A | N/A | N/A | N/A | N/A |
| 215 | 2.62 | 2.45 | 2.65 | 2.47 | 2.89 | 2.71 | N/A | N/A | N/A | N/A | N/A | N/A |
| 218 | 2.62 | 2.45 | 2.65 | 2.47 | 2.89 | 2.71 | N/A | N/A | N/A | N/A | N/A | N/A |
| 220 | 2.62 | 2.45 | 2.65 | 2.47 | 2.89 | 2.71 | N/A | N/A | N/A | N/A | N/A | N/A |
| 224 | 2.62 | 2.45 | 2.65 | 2.47 | 2.89 | 2.71 | N/A | N/A | N/A | N/A | N/A | N/A |
| 226 | 2.62 | 2.45 | 2.65 | 2.47 | 2.89 | 2.71 | N/A | N/A | N/A | N/A | N/A | N/A |
| 230 | 3.15 | 2.98 | 3.18 | 3.00 | 3.42 | 3.24 | N/A | N/A | N/A | N/A | N/A | N/A |
| 232 | 3.15 | 2.98 | 3.18 | 3.00 | 3.42 | 3.24 | N/A | N/A | N/A | N/A | N/A | N/A |
| 242 | 3.62 | 3.43 | 3.65 | 3.44 | 3.89 | 3.68 | N/A | N/A | N/A | N/A | N/A | N/A |
| 252 | N/A | N/A | 4.28 | 4.09 | 4.90 | 4.72 | 4.90 | 4.72 | 5.30 | 5.07 | N/A | N/A |
| 2600 | N/A | N/A | 4.97 | 4.78 | 5.59 | 5.41 | 5.59 | 5.41 | 5.99 | 5.76 | N/A | N/A |
| 2700 | N/A | N/A | 4.97 | 4.78 | 5.59 | 5.41 | 5.59 | 5.41 | 5.99 | 5.76 | N/A | N/A |
| 2800 | N/A | N/A | N/A | N/A | N/A | N/A | 6.38 | 6.16 | 6.39 | 6.14 | 7.17 | 6.93 |
| 21000 | N/A | N/A | N/A | N/A | N/A | N/A | 7.78 | 7.46 | 7.78 | 7.45 | 8.57 | 8.24 |

*Note: Metric motor flanges are available in quill-style (DMQ) only*

## Metric Motor Data

### IEC B5 & B3/B5 Metric Motor Mounting Dimensions

*(All dimensions given in millimeters)*

| Frame | AJ | AK | BD | OD | BE | BORE | KWY.** | BF TAP |
|---|---|---|---|---|---|---|---|---|
| D63D | 115 | 95 | 117 | 131 | 10 | 11 | 4 x 2 | M8 x 1.25 |
| D71D | 130 | 110 | 132 | 146 | 11 | 14 | 5 x 2.5 | M8 x 1.25 |
| D80D | 165 | 130 | 165 | 184 | 15 | 19 | 6 x 3 | M10 x 1.50 |
| D90D | 165 | 130 | 165 | 184 | 15 | 24 | 8 x 3.5 | M10 x 1.50 |
| D100LD* | 215 | 180 | 216 | 237 | 18 | 28 | 8 x 3.5 | M12 x 1.75 |
| D132D | 265 | 230 | 267 | 290 | 18 | 38 | 10 x 4 | M12 x 1.75 |

**also applies to D112MD*
***keyway width by depth*

# Double Reduction

## Worm / Worm Dimensions

### Style DT

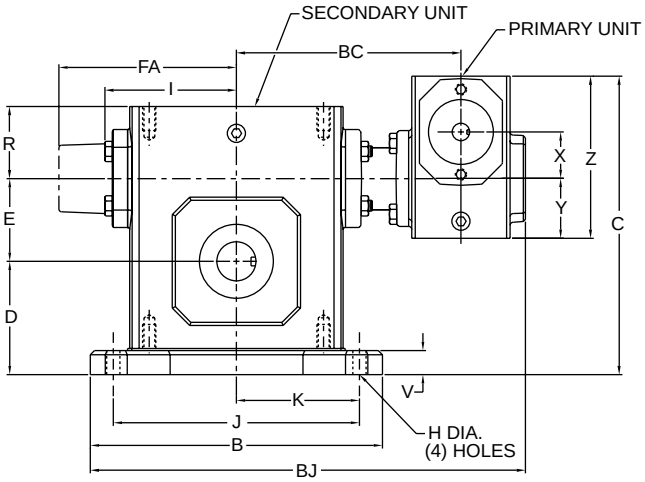


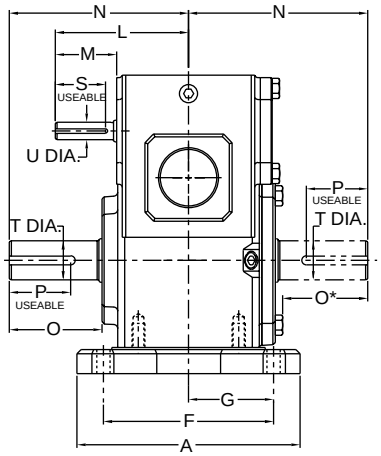


### Styles DTMQ & DTM

STYLE DTMQ
(NEMA AND IEC B5 METRIC MOTORS)

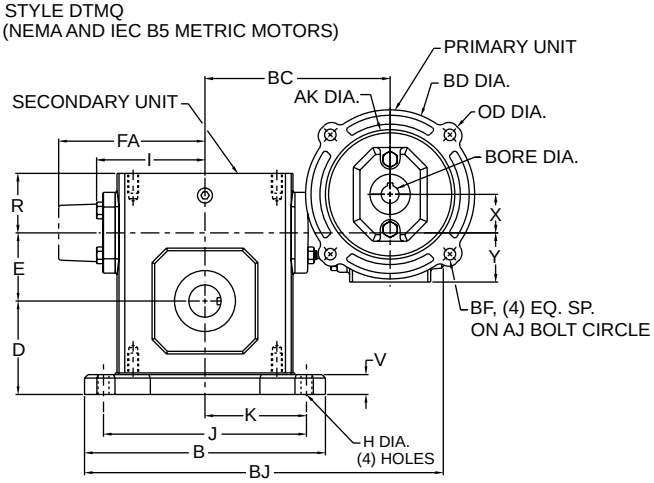


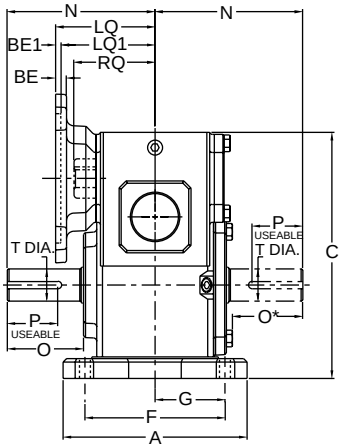


STYLE DTM
(NEMA MOTORS ONLY)

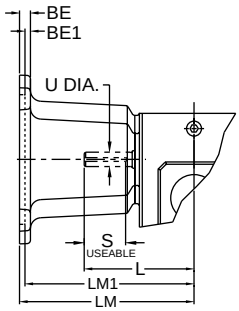


### Assemblies

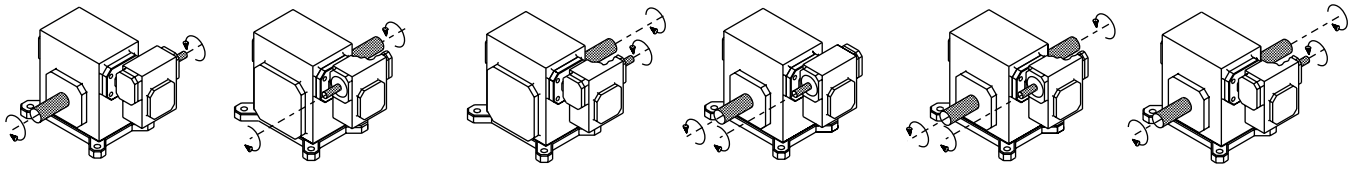

1 2 3 4 5 6

*Note: The input shaft may be rotated in either direction. Units are for mounting as shown. Contact factory for other mountings. Assembly positions also apply to motor flange units ("MQ" and "M").* ***See page 72 for additional assembly options.***

# Double Reduction

## Styles DT, DTMQ, DTM

| UNIT | A | B | BC | BJ | C | D | E | F | FA | G | H Dia. | I | J | K | L | M | N | O | O* |
|---|---|---|---|---|---|---|---|---|---|---|---|---|---|---|---|---|---|---|---|
| | | | | | | | | 4.38 | | 2.19 | | | | | | | | | |
| 213 | 5.38 | 5.37 | 5.32 | 9.85 | 6.52 | 2.25 | 1.333 | 3.31 | N/A | 1.66 | .34 | 2.61 | 4.37 | 2.19 | 3.82 | 1.76 | 4.00 | 2.16 | 1.94 |
| 215 | 5.56 | 6.50 | 5.85 | 10.94 | 6.98 | 2.50 | 1.540 | 4.31 | N/A | 2.16 | .41 | 3.14 | 5.25 | 2.63 | 3.82 | 1.76 | 4.31 | 2.11 | 1.90 |
| 218 | 5.75 | 6.99 | 5.94 | 11.28 | 7.44 | 2.75 | 1.750 | 4.50 | N/A | 2.25 | .41 | 3.24 | 5.75 | 2.88 | 3.82 | 1.76 | 4.31 | 2.05 | 1.84 |
| 220 | 6.00 | 7.69 | 6.32 | 12.01 | 8.00 | 3.00 | 2.063 | 4.69 | N/A | 2.34 | .47 | 3.61 | 6.38 | 3.19 | 3.82 | 1.76 | 4.68 | 2.29 | 2.08 |
| 224 | 6.19 | 8.37 | 6.44 | 12.48 | 8.56 | 3.25 | 2.375 | 4.88 | N/A | 2.44 | .47 | 3.77 | 7.06 | 3.53 | 3.82 | 1.76 | 5.14 | 2.66 | 2.44 |
| 226 | 6.50 | 9.25 | 7.01 | 13.48 | 9.25 | 3.69 | 2.625 | 5.25 | N/A | 2.63 | .53 | 4.34 | 8.00 | 4.00 | 3.82 | 1.76 | 5.63 | 2.73 | 2.52 |
| 230 | 7.50 | 10.00 | 7.86 | 15.06 | 10.47 | 4.00 | 3.000 | 5.88 | N/A | 2.94 | .53 | 4.84 | 8.44 | 4.22 | 4.35 | 1.76 | 6.75 | 3.60 | 3.36 |
| 232 | 7.75 | 11.12 | 8.05 | 15.81 | 11.09 | 4.38 | 3.250 | 6.13 | N/A | 3.06 | .53 | 5.02 | 9.50 | 4.75 | 4.35 | 1.76 | 7.06 | 3.66 | 3.42 |
| 242 | 9.75 | 13.24 | 9.18 | 18.19 | 13.78 | 5.44 | 4.250 | 7.63 | N/A | 3.81 | .66 | 6.10 | 11.12 | 5.56 | 4.82 | 1.76 | 8.12 | 4.50 | 4.21 |
| 252 | 10.50 | 16.24 | 11.57 | 22.59 | 16.56 | 6.25 | 5.250 | 8.38 | N/A | 4.19 | .78 | 7.50 | 14.12 | 7.06 | 6.07 | 2.38 | 9.06 | 4.78 | 4.53 |
| 2600 | 12.00 | 18.99 | 13.30 | 26.19 | 19.63 | 7.75 | 6.000 | 9.50 | 10.24 | 4.75 | .91 | N/A | 16.49 | 8.25 | 6.76 | 2.38 | 10.00 | 4.66 | 4.66 |
| 2700 | 13.38 | 15.38 | 12.96 | 24.58 | 21.88 | 9.00 | 7.000 | 11.25 | 10.63 | 5.63 | 1.13 | N/A | 13.00 | 6.50 | 6.76 | 2.38 | 11.76 | 5.69 | 5.69 |
| 2800 | 13.50 | 17.37 | 13.94 | 26.88 | 25.44 | 10.50 | 8.000 | 11.50 | 11.93 | 5.75 | 1.13 | N/A | 14.75 | 7.38 | 9.57 | 3.47 | 12.25 | 6.02 | 6.02 |
| 21000 | 16.88 | 21.24 | 17.05 | 32.92 | 30.88 | 12.00 | 10.000 | 14.00 | 14.34 | 7.00 | 1.44 | N/A | 17.00 | 8.50 | 10.88 | 3.38 | 14.75 | 6.80 | 6.80 |

| UNIT | P** | R | S** | T Dia. | U Dia. | V | X | Y | Z |
|---|---|---|---|---|---|---|---|---|---|
| 213 | 3/16 x 1.50 | 1.61 | 1/8 x 1.44 | .625 | .500 | .53 | 1.333 | 1.72 | 4.66 |
| 215 | 3/16 x 1.50 | 1.93 | 1/8 x 1.44 | .750 | .500 | .59 | 1.333 | 1.72 | 4.66 |
| 218 | 3/16 x 1.38 | 1.94 | 1/8 x 1.44 | .875 | .500 | .69 | 1.333 | 1.72 | 4.66 |
| 220 | 1/4 x 1.44 | 2.03 | 1/8 x 1.44 | 1.000 | .500 | .72 | 1.333 | 1.72 | 4.66 |
| 224 | 1/4 x 1.75 | 2.06 | 1/8 x 1.44 | 1.125 | .500 | .75 | 1.333 | 1.72 | 4.66 |
| 226 | 1/4 x 2.00 | 2.44 | 1/8 x 1.44 | 1.250 | .500 | .75 | 1.333 | 1.72 | 4.66 |
| 230 | 1/4 X 2.25 | 2.63 | 3/16 x 1.50 | 1.250 | .625 | .75 | 1.540 | 1.91 | 5.38 |
| 232 | 3/8 X 2.62 | 2.63 | 3/16 x 1.50 | 1.500 | .625 | .88 | 1.540 | 1.91 | 5.38 |
| 242 | 1/2 X 3.06 | 2.69 | 3/16 x 1.50 | 1.875 | .625 | 1.00 | 2.063 | 2.28 | 6.38 |
| 252 | 1/2 x 3.50 | 3.63 | 3/16 x 1.75 | 2.000 | .750 | 1.13 | 2.625 | 2.94 | 8.00 |
| 2600 | 5/8 x 4.00 | 4.00 | 3/16 x 1.75 | 2.500 | .875 | 1.25 | 3.250 | 3.50 | 9.38 |
| 2700 | 5/8 x 4.00 | 4.33 | 3/16 x 1.75 | 2.750 | .875 | 1.42 | 3.250 | 3.50 | 9.38 |
| 2800 | 3/4 x 4.50 | 4.11 | 1/4 x 2.88 | 3.000 | 1.250 | 1.65 | 4.250 | 4.44 | 11.38 |
| 21000 | 7/8 x 5.00 | 5.12 | 1/4 x 3.00 | 3.750 | 1.250 | 1.65 | 5.250 | 5.12 | 14.00 |

**applies to double output shaft*
***keyway width by length*

## NEMA Motor Data

### NEMA Motor Mounting Dimensions

| Frame | AJ | AK | BD | OD | BE | BE1 | BORE | KWY.** | BF |
|---|---|---|---|---|---|---|---|---|---|
| 48CZ | 3.75 | 3.00 | 3.88 | 4.36 | .38 | N/A | .500 | 1/8 x 1/16 | .28 |
| 56C | 5.88 | 4.50 | 5.88 | 6.64 | .38 | N/A | .625 | 3/16 x 3/32 | .41 |
| 140TC | 5.88 | 4.50 | 5.88 | 6.64 | .38 | N/A | .875 | 3/16 x 3/32 | .41 |
| 180TC | 7.25 | 8.50 | 9.00 | N/A | N/A | .50 | 1.125 | 1/4 x 1/8 | .53 |
| 210TC | 7.25 | 8.50 | 9.00 | N/A | N/A | .50 | 1.375 | 5/16 x 5/32 | .53 |
| 250TC | 7.25 | 8.50 | 9.00 | N/A | N/A | .50 | 1.625 | 3/8 x 3/16 | .53 |

***keyway width by depth*

### NEMA Motor Flange Face Locations

| | 48CZ | | | 56C/140TC | | | 180TC | | | 210TC | | | 250TC | | |
|---|---|---|---|---|---|---|---|---|---|---|---|---|---|---|---|
| UNIT | LM | RQ | LQ | LM | RQ | LQ | LM1 | RQ | LQ1 | LM1 | RQ | LQ1 | LM1 | RQ | LQ1 |
| 213 | 5.63 | 3.09 | 3.46 | 6.07 | 3.09 | 3.46 | N/A | N/A | N/A | N/A | N/A | N/A | N/A | N/A | N/A |
| 215 | 5.63 | 3.09 | 3.46 | 6.07 | 3.09 | 3.46 | N/A | N/A | N/A | N/A | N/A | N/A | N/A | N/A | N/A |
| 218 | 5.63 | 3.09 | 3.46 | 6.07 | 3.09 | 3.46 | N/A | N/A | N/A | N/A | N/A | N/A | N/A | N/A | N/A |
| 220 | 5.63 | 3.09 | 3.46 | 6.07 | 3.09 | 3.46 | N/A | N/A | N/A | N/A | N/A | N/A | N/A | N/A | N/A |
| 224 | 5.63 | 3.09 | 3.46 | 6.07 | 3.09 | 3.46 | N/A | N/A | N/A | N/A | N/A | N/A | N/A | N/A | N/A |
| 226 | 5.63 | 3.09 | 3.46 | 6.07 | 3.09 | 3.46 | N/A | N/A | N/A | N/A | N/A | N/A | N/A | N/A | N/A |
| 230 | 6.16 | 3.62 | 3.99 | 6.60 | 3.62 | 3.99 | N/A | N/A | N/A | N/A | N/A | N/A | N/A | N/A | N/A |
| 232 | 6.16 | 3.62 | 3.99 | 6.60 | 3.62 | 3.99 | N/A | N/A | N/A | N/A | N/A | N/A | N/A | N/A | N/A |
| 242 | 6.63 | 4.06 | 4.46 | 7.07 | 4.06 | 4.46 | N/A | N/A | N/A | N/A | N/A | N/A | N/A | N/A | N/A |
| 252 | N/A | N/A | N/A | 8.32 | 4.82 | 5.19 | 9.32 | 5.13 | 5.62 | 9.32 | N/A | N/A | N/A | N/A | N/A |
| 2600 | N/A | N/A | N/A | 9.01 | 5.51 | 5.88 | 10.01 | 5.81 | 6.31 | 10.01 | 6.25 | 6.75 | N/A | N/A | N/A |
| 2700 | N/A | N/A | N/A | 9.01 | 5.51 | 5.88 | 10.01 | 5.81 | 6.31 | 10.01 | 6.25 | 6.75 | N/A | N/A | N/A |
| 2800 | N/A | N/A | N/A | 11.81 | 6.04 | 6.45 | 12.90 | 6.68 | 7.21 | 12.90 | 6.68 | 7.21 | 13.46 | 7.24 | 7.77 |
| 21000 | N/A | N/A | N/A | 13.21 | 7.35 | 7.85 | 14.30 | 7.98 | 8.61 | 14.30 | 7.98 | 8.61 | 14.86 | 8.54 | 9.17 |

*Note: All dimensions listed are for reference only. Contact factory for certified dimensions.*

WARNING *For safety, purchaser or user should provide protective guards over shaft extensions and any couplings, sheaves and belts, sprockets and chains, etc., mounted thereon.*

### IEC B5 & B3/B5 Metric Motor Flange Face Locations

| | D63D | | D71D | | D80D | | D90D | | D100LD D112MD | | D132D | |
|---|---|---|---|---|---|---|---|---|---|---|---|---|
| UNIT | LQ | RQ | LQ | RQ | LQ | RQ | LQ | RQ | LQ | RQ | LQ | RQ |
| 213 | 2.62 | 2.45 | 2.65 | 2.47 | 2.89 | 2.71 | N/A | N/A | N/A | N/A | N/A | N/A |
| 215 | 2.62 | 2.45 | 2.65 | 2.47 | 2.89 | 2.71 | N/A | N/A | N/A | N/A | N/A | N/A |
| 218 | 2.62 | 2.45 | 2.65 | 2.47 | 2.89 | 2.71 | N/A | N/A | N/A | N/A | N/A | N/A |
| 220 | 2.62 | 2.45 | 2.65 | 2.47 | 2.89 | 2.71 | N/A | N/A | N/A | N/A | N/A | N/A |
| 224 | 2.62 | 2.45 | 2.65 | 2.47 | 2.89 | 2.71 | N/A | N/A | N/A | N/A | N/A | N/A |
| 226 | 2.62 | 2.45 | 2.65 | 2.47 | 2.89 | 2.71 | N/A | N/A | N/A | N/A | N/A | N/A |
| 230 | 3.15 | 2.98 | 3.18 | 3.00 | 3.42 | 3.24 | N/A | N/A | N/A | N/A | N/A | N/A |
| 232 | 3.15 | 2.98 | 3.18 | 3.00 | 3.42 | 3.24 | N/A | N/A | N/A | N/A | N/A | N/A |
| 242 | 3.62 | 3.43 | 3.65 | 3.44 | 3.89 | 3.68 | N/A | N/A | N/A | N/A | N/A | N/A |
| 252 | N/A | N/A | 4.28 | 4.09 | 4.90 | 4.72 | 4.90 | 4.72 | 5.30 | 5.07 | N/A | N/A |
| 2600 | N/A | N/A | 4.97 | 4.78 | 5.59 | 5.41 | 5.59 | 5.41 | 5.99 | 5.76 | N/A | N/A |
| 2700 | N/A | N/A | 4.97 | 4.78 | 5.59 | 5.41 | 5.59 | 5.41 | 5.99 | 5.76 | N/A | N/A |
| 2800 | N/A | N/A | N/A | N/A | N/A | N/A | 6.38 | 6.16 | 6.39 | 6.14 | 7.17 | 6.93 |
| 21000 | N/A | N/A | N/A | N/A | N/A | N/A | 7.78 | 7.46 | 7.78 | 7.45 | 8.57 | 8.24 |

## Metric Motor Data

### IEC B5 & B3/B5 Metric Motor Mounting Dimensions

*(All dimensions given in millimeters)*

| Frame | AJ | AK | BD | OD | BE | BORE | KWY.** | BF TAP |
|---|---|---|---|---|---|---|---|---|
| D63D | 115 | 95 | 117 | 131 | 10 | 11 | 4 x 2 | M8 x 1.25 |
| D71D | 130 | 110 | 132 | 146 | 11 | 14 | 5 x 2.5 | M8 x 1.25 |
| D80D | 165 | 130 | 165 | 184 | 15 | 19 | 6 x 3 | M10 x 1.50 |
| D90D | 165 | 130 | 165 | 184 | 15 | 24 | 8 x 3.5 | M10 x 1.50 |
| D100LD* | 215 | 180 | 216 | 237 | 18 | 28 | 8 x 3.5 | M12 x 1.75 |
| D132D | 265 | 230 | 267 | 290 | 18 | 38 | 10 x 4 | M12 x 1.75 |

**also applies to D112MD*
***keyway width by depth*

# Double Reduction

## Worm / Worm Dimensions

### Style DU

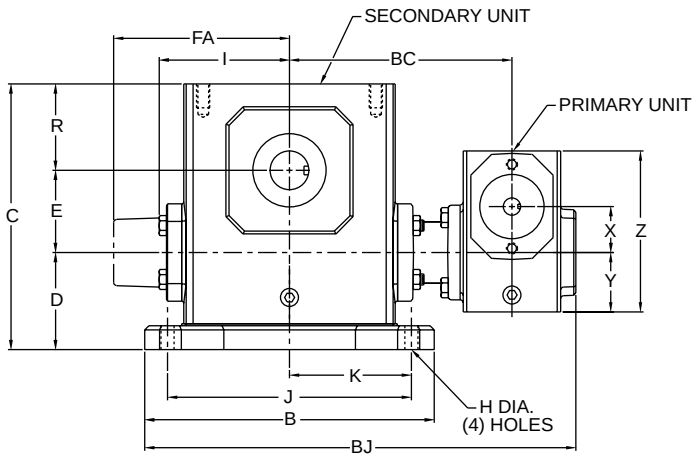


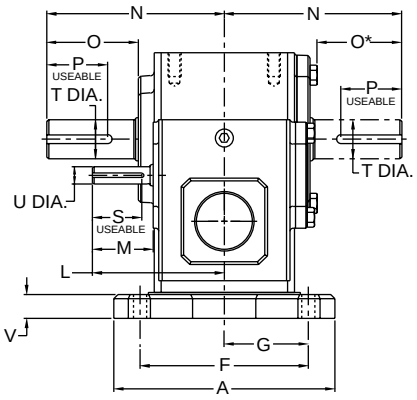


### Styles DUMQ & DUM

STYLE DUMQ
(NEMA AND IEC B5 METRIC MOTORS)

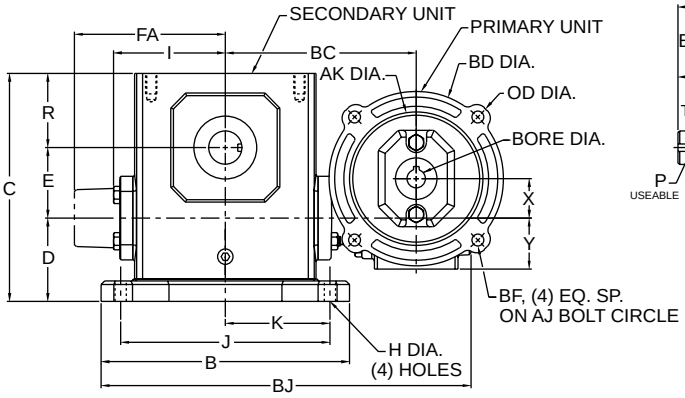


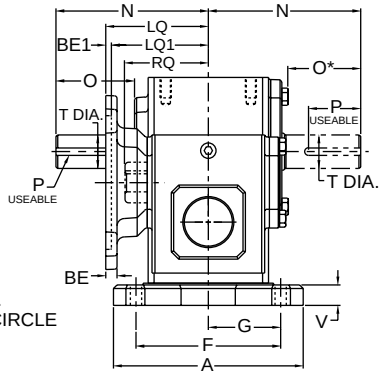


STYLE DUM
(NEMA MOTORS ONLY)

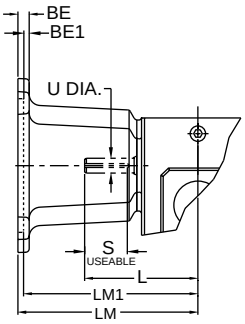


### Assemblies

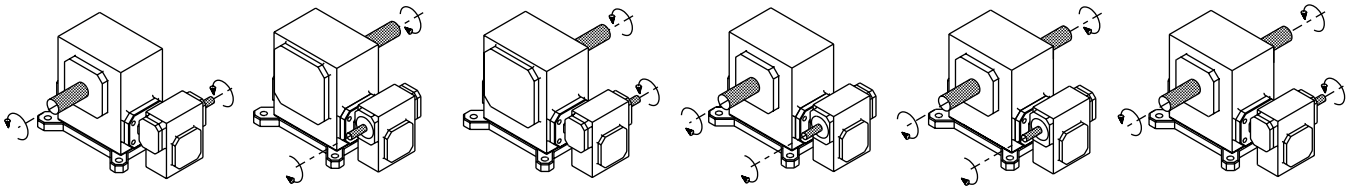

1 2 3 4 5 6

*Note: The input shaft may be rotated in either direction. Units are for mounting as shown. Contact factory for other mountings. Assembly positions also apply to motor flange units ("MQ" and "M").* ***See page 74 for additional assembly options.***

# Double Reduction

## Styles DU, DUMQ, DUM

| UNIT | A | B | BC | BJ | C | D | E | F | FA | G | H Dia. | I | J | K | L | M | N | O | O* |
|---|---|---|---|---|---|---|---|---|---|---|---|---|---|---|---|---|---|---|---|
| | | | | | | | | 4.38 | | 2.19 | | | | | | | | | |
| 213 | 5.38 | 5.37 | 5.32 | 9.85 | 5.19 | 2.14 | 1.333 | 3.31 | N/A | 1.66 | .34 | 2.61 | 4.37 | 2.19 | 3.82 | 1.76 | 4.00 | 2.16 | 1.94 |
| 215 | 5.56 | 6.50 | 5.85 | 10.94 | 5.97 | 2.52 | 1.540 | 4.31 | N/A | 2.16 | .41 | 3.14 | 5.25 | 2.63 | 3.82 | 1.76 | 4.31 | 2.11 | 1.90 |
| 218 | 5.75 | 6.99 | 5.94 | 11.28 | 6.44 | 2.63 | 1.750 | 4.50 | N/A | 2.25 | .41 | 3.24 | 5.75 | 2.88 | 3.82 | 1.76 | 4.31 | 2.05 | 1.84 |
| 220 | 6.00 | 7.69 | 6.32 | 12.01 | 7.09 | 2.75 | 2.063 | 4.69 | N/A | 2.34 | .47 | 3.61 | 6.38 | 3.19 | 3.82 | 1.76 | 4.68 | 2.29 | 2.08 |
| 224 | 6.19 | 8.37 | 6.44 | 12.48 | 7.69 | 2.81 | 2.375 | 4.88 | N/A | 2.44 | .47 | 3.77 | 7.06 | 3.53 | 3.82 | 1.76 | 5.14 | 2.66 | 2.44 |
| 226 | 6.50 | 9.25 | 7.01 | 13.48 | 8.75 | 3.19 | 2.625 | 5.25 | N/A | 2.63 | .53 | 4.34 | 8.00 | 4.00 | 3.82 | 1.76 | 5.63 | 2.73 | 2.52 |
| 230 | 7.50 | 10.00 | 7.86 | 15.06 | 9.63 | 3.38 | 3.000 | 5.88 | N/A | 2.94 | .53 | 4.84 | 8.44 | 4.22 | 4.35 | 1.76 | 6.75 | 3.60 | 3.36 |
| 232 | 7.75 | 11.12 | 8.05 | 15.81 | 10.25 | 3.50 | 3.250 | 6.13 | N/A | 3.06 | .53 | 5.02 | 9.50 | 4.75 | 4.35 | 1.76 | 7.06 | 3.66 | 3.42 |
| 242 | 9.75 | 13.24 | 9.18 | 18.19 | 12.38 | 3.69 | 4.250 | 7.63 | N/A | 3.81 | .66 | 6.10 | 11.12 | 5.56 | 4.82 | 1.76 | 8.12 | 4.50 | 4.21 |
| 252 | 10.50 | 16.24 | 11.57 | 22.59 | 15.13 | 4.76 | 5.250 | 8.38 | N/A | 4.19 | .78 | 7.50 | 14.12 | 7.06 | 6.07 | 2.38 | 9.06 | 4.78 | 4.53 |
| 2600 | 12.00 | 18.99 | 13.30 | 26.19 | 17.75 | 5.25 | 6.000 | 9.50 | 10.24 | 4.75 | .91 | N/A | 16.49 | 8.25 | 6.76 | 2.38 | 10.00 | 4.66 | 4.66 |
| 2700 | 13.38 | 15.38 | 12.96 | 24.58 | 20.33 | 5.74 | 7.000 | 11.25 | 10.63 | 5.63 | 1.13 | N/A | 13.00 | 6.50 | 6.76 | 2.38 | 11.76 | 5.69 | 5.69 |
| 2800 | 13.50 | 17.37 | 13.94 | 26.88 | 22.61 | 5.75 | 8.000 | 11.50 | 11.93 | 5.75 | 1.13 | N/A | 14.75 | 7.38 | 9.57 | 3.47 | 12.25 | 6.02 | 6.02 |
| 21000 | 16.88 | 21.24 | 17.05 | 32.92 | 27.12 | 6.76 | 10.000 | 14.00 | 14.34 | 7.00 | 1.44 | N/A | 17.00 | 8.50 | 10.88 | 3.38 | 14.75 | 6.80 | 6.80 |

| UNIT | P** | R | S** | T Dia. | U Dia. | V | X | Y | Z |
|---|---|---|---|---|---|---|---|---|---|
| 213 | 3/16 x 1.50 | 1.72 | 1/8 x 1.44 | .625 | .500 | .53 | 1.333 | 1.72 | 4.66 |
| 215 | 3/16 x 1.50 | 1.91 | 1/8 x 1.44 | .750 | .500 | .59 | 1.333 | 1.72 | 4.66 |
| 218 | 3/16 x 1.38 | 2.06 | 1/8 x 1.44 | .875 | .500 | .69 | 1.333 | 1.72 | 4.66 |
| 220 | 1/4 x 1.44 | 2.28 | 1/8 x 1.44 | 1.000 | .500 | .72 | 1.333 | 1.72 | 4.66 |
| 224 | 1/4 x 1.75 | 2.50 | 1/8 x 1.44 | 1.125 | .500 | .75 | 1.333 | 1.72 | 4.66 |
| 226 | 1/4 x 2.00 | 2.94 | 1/8 x 1.44 | 1.250 | .500 | .75 | 1.333 | 1.72 | 4.66 |
| 230 | 1/4 X 2.25 | 3.25 | 3/16 x 1.50 | 1.250 | .625 | .75 | 1.540 | 1.91 | 5.38 |
| 232 | 3/8 X 2.62 | 3.50 | 3/16 x 1.50 | 1.500 | .625 | .88 | 1.540 | 1.91 | 5.38 |
| 242 | 1/2 X 3.06 | 4.44 | 3/16 x 1.50 | 1.875 | .625 | 1.00 | 2.063 | 2.28 | 6.38 |
| 252 | 1/2 x 3.50 | 5.12 | 3/16 x 1.75 | 2.000 | .750 | 1.13 | 2.625 | 2.94 | 8.00 |
| 2600 | 5/8 x 4.00 | 6.50 | 3/16 x 1.75 | 2.500 | .875 | 1.25 | 3.250 | 3.50 | 9.38 |
| 2700 | 5/8 x 4.00 | 7.59 | 3/16 x 1.75 | 2.750 | .875 | 1.42 | 3.250 | 3.50 | 9.38 |
| 2800 | 3/4 x 4.50 | 8.86 | 1/4 x 2.88 | 3.000 | 1.250 | 1.65 | 4.250 | 4.44 | 11.38 |
| 21000 | 7/8 x 5.00 | 10.36 | 1/4 x 3.00 | 3.750 | 1.250 | 1.65 | 5.250 | 5.12 | 14.00 |

**applies to double output shaft*
***keyway width by length*

*Note: All dimensions listed are for reference only. Contact factory for certified dimensions.*

WARNING *For safety, purchaser or user should provide protective guards over shaft extensions and any couplings, sheaves and belts, sprockets and chains, etc., mounted thereon.*

## NEMA Motor Data

### NEMA Motor Mounting Dimensions

| Frame | AJ | AK | BD | OD | BE | BE1 | BORE | KWY.** | BF |
|---|---|---|---|---|---|---|---|---|---|
| 48CZ | 3.75 | 3.00 | 3.88 | 4.36 | .38 | N/A | .500 | 1/8 x 1/16 | .28 |
| 56C | 5.88 | 4.50 | 5.88 | 6.64 | .38 | N/A | .625 | 3/16 x 3/32 | .41 |
| 140TC | 5.88 | 4.50 | 5.88 | 6.64 | .38 | N/A | .875 | 3/16 x 3/32 | .41 |
| 180TC | 7.25 | 8.50 | 9.00 | N/A | N/A | .50 | 1.125 | 1/4 x 1/8 | .53 |
| 210TC | 7.25 | 8.50 | 9.00 | N/A | N/A | .50 | 1.375 | 5/16 x 5/32 | .53 |
| 250TC | 7.25 | 8.50 | 9.00 | N/A | N/A | .50 | 1.625 | 3/8 x 3/16 | .53 |

***keyway width by depth*

### NEMA Motor Flange Face Locations

| | 48CZ | | | 56C/140TC | | | 180TC | | | 210TC | | | 250TC | | |
|---|---|---|---|---|---|---|---|---|---|---|---|---|---|---|---|
| UNIT | LM | RQ | LQ | LM | RQ | LQ | LM1 | RQ | LQ1 | LM1 | RQ | LQ1 | LM1 | RQ | LQ1 |
| 213 | 5.63 | 3.09 | 3.46 | 6.07 | 3.09 | 3.46 | N/A | N/A | N/A | N/A | N/A | N/A | N/A | N/A | N/A |
| 215 | 5.63 | 3.09 | 3.46 | 6.07 | 3.09 | 3.46 | N/A | N/A | N/A | N/A | N/A | N/A | N/A | N/A | N/A |
| 218 | 5.63 | 3.09 | 3.46 | 6.07 | 3.09 | 3.46 | N/A | N/A | N/A | N/A | N/A | N/A | N/A | N/A | N/A |
| 220 | 5.63 | 3.09 | 3.46 | 6.07 | 3.09 | 3.46 | N/A | N/A | N/A | N/A | N/A | N/A | N/A | N/A | N/A |
| 224 | 5.63 | 3.09 | 3.46 | 6.07 | 3.09 | 3.46 | N/A | N/A | N/A | N/A | N/A | N/A | N/A | N/A | N/A |
| 226 | 5.63 | 3.09 | 3.46 | 6.07 | 3.09 | 3.46 | N/A | N/A | N/A | N/A | N/A | N/A | N/A | N/A | N/A |
| 230 | 6.16 | 3.62 | 3.99 | 6.60 | 3.62 | 3.99 | N/A | N/A | N/A | N/A | N/A | N/A | N/A | N/A | N/A |
| 232 | 6.16 | 3.62 | 3.99 | 6.60 | 3.62 | 3.99 | N/A | N/A | N/A | N/A | N/A | N/A | N/A | N/A | N/A |
| 242 | 6.63 | 4.06 | 4.46 | 7.07 | 4.06 | 4.46 | N/A | N/A | N/A | N/A | N/A | N/A | N/A | N/A | N/A |
| 252 | N/A | N/A | N/A | 8.32 | 4.82 | 5.19 | 9.32 | 5.13 | 5.62 | 9.32 | N/A | N/A | N/A | N/A | N/A |
| 2600 | N/A | N/A | N/A | 9.01 | 5.51 | 5.88 | 10.01 | 5.81 | 6.31 | 10.01 | 6.25 | 6.75 | N/A | N/A | N/A |
| 2700 | N/A | N/A | N/A | 9.01 | 5.51 | 5.88 | 10.01 | 5.81 | 6.31 | 10.01 | 6.25 | 6.75 | N/A | N/A | N/A |
| 2800 | N/A | N/A | N/A | 11.81 | 6.04 | 6.45 | 12.90 | 6.68 | 7.21 | 12.90 | 6.68 | 7.21 | 13.46 | 7.24 | 7.77 |
| 21000 | N/A | N/A | N/A | 13.21 | 7.35 | 7.85 | 14.30 | 7.98 | 8.61 | 14.30 | 7.98 | 8.61 | 14.86 | 8.54 | 9.17 |

### IEC B5 & B3/B5 Metric Motor Flange Face Locations

| | D63D | | D71D | | D80D | | D90D | | D100LD D112MD | | D132D | |
|---|---|---|---|---|---|---|---|---|---|---|---|---|
| UNIT | LQ | RQ | LQ | RQ | LQ | RQ | LQ | RQ | LQ | RQ | LQ | RQ |
| 213 | 2.62 | 2.45 | 2.65 | 2.47 | 2.89 | 2.71 | N/A | N/A | N/A | N/A | N/A | N/A |
| 215 | 2.62 | 2.45 | 2.65 | 2.47 | 2.89 | 2.71 | N/A | N/A | N/A | N/A | N/A | N/A |
| 218 | 2.62 | 2.45 | 2.65 | 2.47 | 2.89 | 2.71 | N/A | N/A | N/A | N/A | N/A | N/A |
| 220 | 2.62 | 2.45 | 2.65 | 2.47 | 2.89 | 2.71 | N/A | N/A | N/A | N/A | N/A | N/A |
| 224 | 2.62 | 2.45 | 2.65 | 2.47 | 2.89 | 2.71 | N/A | N/A | N/A | N/A | N/A | N/A |
| 226 | 2.62 | 2.45 | 2.65 | 2.47 | 2.89 | 2.71 | N/A | N/A | N/A | N/A | N/A | N/A |
| 230 | 3.15 | 2.98 | 3.18 | 3.00 | 3.42 | 3.24 | N/A | N/A | N/A | N/A | N/A | N/A |
| 232 | 3.15 | 2.98 | 3.18 | 3.00 | 3.42 | 3.24 | N/A | N/A | N/A | N/A | N/A | N/A |
| 242 | 3.62 | 3.43 | 3.65 | 3.44 | 3.89 | 3.68 | N/A | N/A | N/A | N/A | N/A | N/A |
| 252 | N/A | N/A | 4.28 | 4.09 | 4.90 | 4.72 | 4.90 | 4.72 | 5.30 | 5.07 | N/A | N/A |
| 2600 | N/A | N/A | 4.97 | 4.78 | 5.59 | 5.41 | 5.59 | 5.41 | 5.99 | 5.76 | N/A | N/A |
| 2700 | N/A | N/A | 4.97 | 4.78 | 5.59 | 5.41 | 5.59 | 5.41 | 5.99 | 5.76 | N/A | N/A |
| 2800 | N/A | N/A | N/A | N/A | N/A | N/A | 6.38 | 6.16 | 6.39 | 6.14 | 7.17 | 6.93 |
| 21000 | N/A | N/A | N/A | N/A | N/A | N/A | 7.78 | 7.46 | 7.78 | 7.45 | 8.57 | 8.24 |

## Metric Motor Data

### IEC B5 & B3/B5 Metric Motor Mounting Dimensions

*(All dimensions given in millimeters)*

| Frame | AJ | AK | BD | OD | BE | BORE | KWY.** | BF TAP |
|---|---|---|---|---|---|---|---|---|
| D63D | 115 | 95 | 117 | 131 | 10 | 11 | 4 x 2 | M8 x 1.25 |
| D71D | 130 | 110 | 132 | 146 | 11 | 14 | 5 x 2.5 | M8 x 1.25 |
| D80D | 165 | 130 | 165 | 184 | 15 | 19 | 6 x 3 | M10 x 1.50 |
| D90D | 165 | 130 | 165 | 184 | 15 | 24 | 8 x 3.5 | M10 x 1.50 |
| D100LD* | 215 | 180 | 216 | 237 | 18 | 28 | 8 x 3.5 | M12 x 1.75 |
| D132D | 265 | 230 | 267 | 290 | 18 | 38 | 10 x 4 | M12 x 1.75 |

**also applies to D112MD*
***keyway width by depth*

# Double Reduction

## Worm / Worm Dimensions

### Style DV*(L or H)*

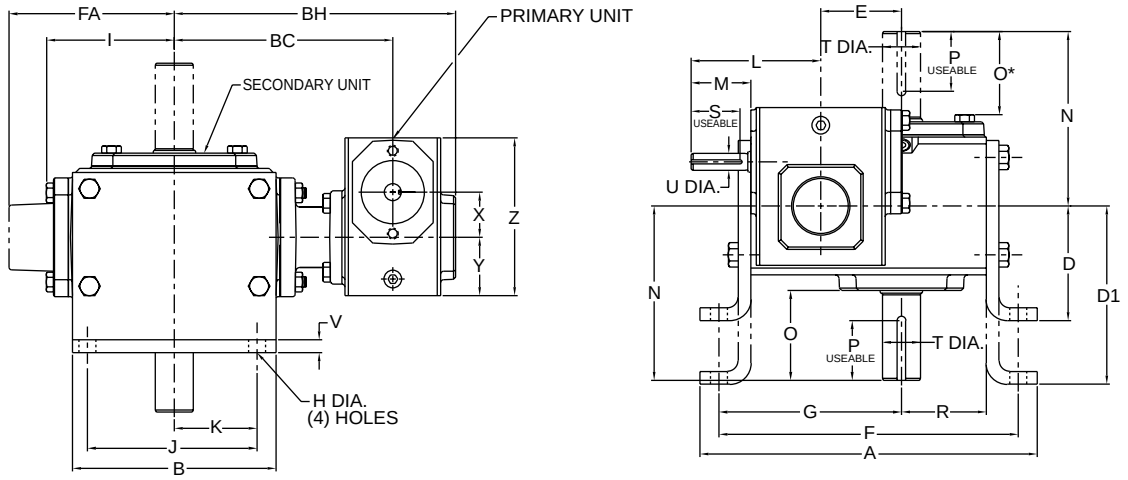


### Styles DV*(L or H)*MQ & DV*(L or H)*M

STYLE DV*(L or H)*MQ
(NEMA AND IEC B5 METRIC MOTORS)

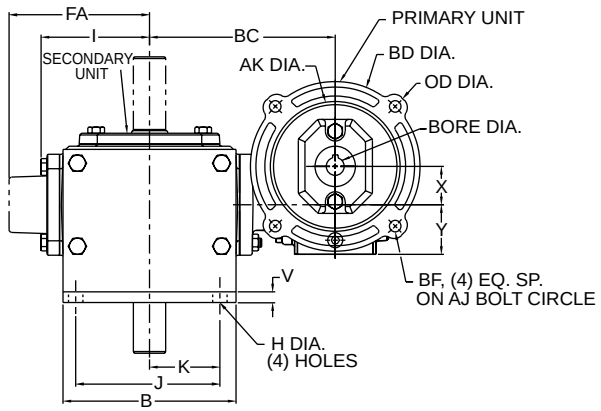


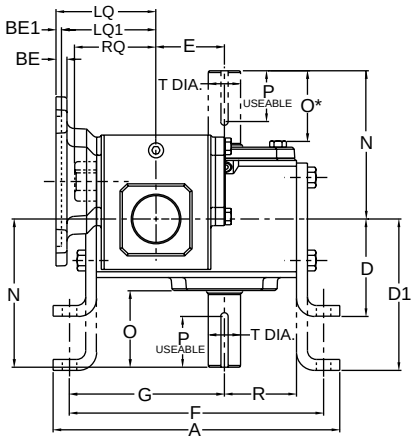


STYLE DV*(L or H)*M
(NEMA MOTORS ONLY)

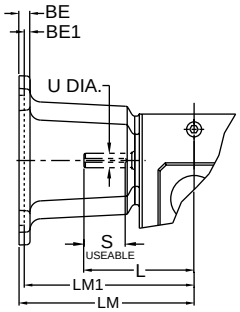


### Assemblies

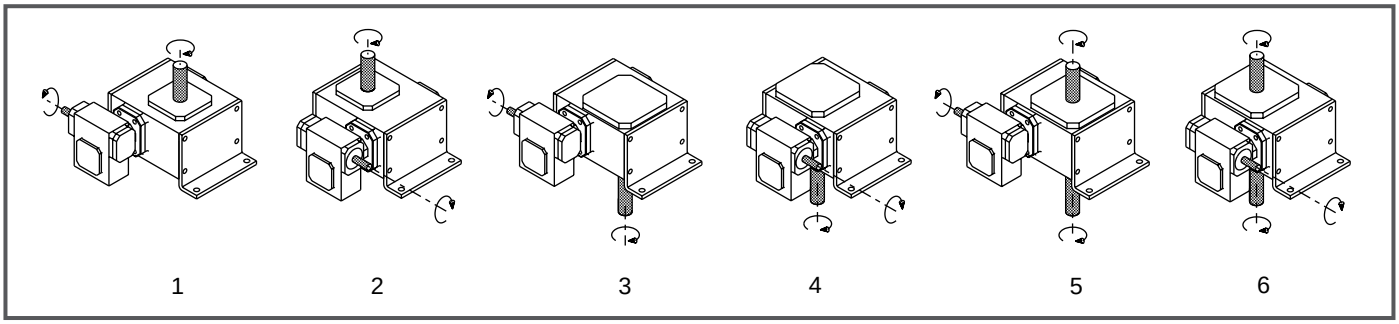


*Note: The input shaft may be rotated in either direction. Units are for mounting as shown. Contact factory for other mountings. Assembly positions also apply to motor flange units ("MQ" and "M").* ***See page 73 for additional assembly options.***

# Double Reduction

## Styles DV(*L or H*), DV(*L or H*)MQ, DV(*L or H*)M

| UNIT | A | B | BC | BH | D | D1 | E | F | FA | G | H | I | J | K | L | M | N | O | O* |
|---|---|---|---|---|---|---|---|---|---|---|---|---|---|---|---|---|---|---|---|
| 213 | 7.26 | 4.00 | 5.32 | 7.16 | 2.63 | 3.56 | 1.333 | 6.50 | N/A | 3.86 | .38 | 2.61 | 3.00 | 1.50 | 3.82 | 1.76 | 4.00 | 2.16 | 1.94 |
| 215 | 7.88 | 5.00 | 5.85 | 7.69 | 3.00 | 4.38 | 1.540 | 7.00 | N/A | 4.28 | .44 | 3.14 | 4.00 | 2.00 | 3.82 | 1.76 | 4.31 | 2.11 | 1.90 |
| 218 | 8.25 | 5.00 | 5.94 | 7.79 | 3.00 | 4.38 | 1.750 | 7.37 | N/A | 4.50 | .44 | 3.24 | 4.00 | 2.00 | 3.82 | 1.76 | 4.31 | 2.05 | 1.84 |
| 220 | 9.38 | 6.00 | 6.32 | 8.16 | 3.13 | 4.88 | 2.063 | 8.38 | N/A | 5.09 | .50 | 3.61 | 4.88 | 2.44 | 3.82 | 1.76 | 4.68 | 2.29 | 2.08 |
| 224 | 9.94 | 6.00 | 6.44 | 8.29 | 3.38 | 5.25 | 2.375 | 8.81 | N/A | 5.38 | .50 | 3.77 | 4.88 | 2.44 | 3.82 | 1.76 | 5.14 | 2.66 | 2.44 |
| 226 | 11.24 | 7.00 | 7.01 | 8.85 | 3.63 | 5.56 | 2.625 | 10.12 | N/A | 6.12 | .56 | 4.34 | 5.75 | 2.88 | 3.82 | 1.76 | 5.63 | 2.73 | 2.52 |
| 230 | 12.50 | 8.00 | 7.86 | 10.06 | 3.94 | 5.88 | 3.000 | 11.13 | N/A | 6.75 | .56 | 4.84 | 6.00 | 3.00 | 4.35 | 1.76 | 6.75 | 3.60 | 3.36 |
| 232 | 13.00 | 8.50 | 8.05 | 10.25 | 4.69 | 6.25 | 3.250 | 11.88 | N/A | 7.13 | .56 | 5.02 | 6.13 | 3.06 | 4.35 | 1.76 | 7.06 | 3.66 | 3.42 |
| 242 | 16.26 | 10.00 | 9.18 | 11.57 | 5.00 | 7.50 | 4.250 | 14.88 | N/A | 8.69 | .69 | 6.10 | 7.88 | 3.94 | 4.82 | 1.76 | 8.12 | 4.50 | 4.21 |
| 252 | 19.62 | 13.00 | 11.57 | 14.47 | 5.16 | 9.16 | 5.250 | 18.00 | N/A | 10.88 | .78 | 7.50 | 10.00 | 5.00 | 6.07 | 2.38 | 9.06 | 4.78 | 4.53 |
| 2600 | 23.26 | 14.75 | 13.30 | 16.70 | 7.31 | 9.63 | 6.000 | 20.88 | 10.24 | 12.19 | .91 | N/A | 11.76 | 5.88 | 6.76 | 2.38 | 10.00 | 4.66 | 4.66 |
| 2700 | 26.91 | 14.88 | 12.96 | 16.90 | 7.00 | N/A | 7.000 | 23.99 | 10.63 | 13.87 | 1.13 | N/A | 12.50 | 6.25 | 6.76 | 2.38 | 11.76 | 5.69 | 5.69 |
| 2800 | 28.96 | 17.00 | 13.94 | 18.19 | 8.00 | N/A | 8.000 | 25.50 | 11.93 | 14.38 | 1.13 | N/A | 14.00 | 7.00 | 9.57 | 3.47 | 12.25 | 6.02 | 6.02 |
| 21000 | 37.47 | 20.88 | 17.05 | 22.30 | 9.00 | N/A | 10.000 | 30.75 | 14.34 | 17.76 | 1.44 | N/A | 17.75 | 8.88 | 10.88 | 3.38 | 14.75 | 6.80 | 6.80 |

| UNIT | P** | R | S** | T Dia. | U Dia. | V | X | Y | Z |
|---|---|---|---|---|---|---|---|---|---|
| 213 | 3/16 x 1.50 | 1.72 | 1/8 x 1.44 | .625 | .500 | .25 | 1.333 | 1.72 | 4.66 |
| 215 | 3/16 x 1.50 | 1.91 | 1/8 x 1.44 | .750 | .500 | .25 | 1.333 | 1.72 | 4.66 |
| 218 | 3/16 x 1.38 | 2.06 | 1/8 x 1.44 | .875 | .500 | .25 | 1.333 | 1.72 | 4.66 |
| 220 | 1/4 x 1.44 | 2.28 | 1/8 x 1.44 | 1.000 | .500 | .38 | 1.333 | 1.72 | 4.66 |
| 224 | 1/4 x 1.75 | 2.50 | 1/8 x 1.44 | 1.125 | .500 | .38 | 1.333 | 1.72 | 4.66 |
| 226 | 1/4 x 2.00 | 2.94 | 1/8 x 1.44 | 1.250 | .500 | .38 | 1.333 | 1.72 | 4.66 |
| 230 | 1/4 X 2.25 | 3.25 | 3/16 x 1.50 | 1.250 | .625 | .38 | 1.540 | 1.91 | 5.38 |
| 232 | 3/8 X 2.62 | 3.50 | 3/16 x 1.50 | 1.500 | .625 | .38 | 1.540 | 1.91 | 5.38 |
| 242 | 1/2 X 3.06 | 4.44 | 3/16 x 1.50 | 1.875 | .625 | .50 | 2.063 | 2.28 | 6.38 |
| 252 | 1/2 x 3.50 | 5.12 | 3/16 x 1.75 | 2.000 | .750 | .50 | 2.625 | 2.94 | 8.00 |
| 2600 | 5/8 x 4.00 | 6.50 | 3/16 x 1.75 | 2.500 | .875 | .50 | 3.250 | 3.50 | 9.38 |
| 2700 | 5/8 x 4.00 | 7.59 | 3/16 x 1.75 | 2.750 | .875 | .75 | 3.250 | 3.50 | 9.38 |
| 2800 | 3/4 x 4.50 | 8.86 | 1/4 x 2.88 | 3.000 | 1.250 | .75 | 4.250 | 4.44 | 11.38 |
| 21000 | 7/8 x 5.00 | 10.36 | 1/4 x 3.00 | 3.750 | 1.250 | 1.00 | 5.250 | 5.12 | 14.00 |

** applies to double output shaft–all sizes, and single output shaft–sizes 242 & larger*
***keyway width by length*

*Note: All dimensions listed are for reference only. Contact factory for certified dimensions.*

WARNING *For safety, purchaser or user should provide protective guards over shaft extensions and any couplings, sheaves and belts, sprockets and chains, etc., mounted thereon.*

## NEMA Motor Data

### NEMA Motor Mounting Dimensions

| Frame | AJ | AK | BD | OD | BE | BE1 | BORE | KWY.** | BF |
|---|---|---|---|---|---|---|---|---|---|
| 48CZ | 3.75 | 3.00 | 3.88 | 4.36 | .38 | N/A | .500 | 1/8 x 1/16 | .28 |
| 56C | 5.88 | 4.50 | 5.88 | 6.64 | .38 | N/A | .625 | 3/16 x 3/32 | .41 |
| 140TC | 5.88 | 4.50 | 5.88 | 6.64 | .38 | N/A | .875 | 3/16 x 3/32 | .41 |
| 180TC | 7.25 | 8.50 | 9.00 | N/A | N/A | .50 | 1.125 | 1/4 x 1/8 | .53 |
| 210TC | 7.25 | 8.50 | 9.00 | N/A | N/A | .50 | 1.375 | 5/16 x 5/32 | .53 |
| 250TC | 7.25 | 8.50 | 9.00 | N/A | N/A | .50 | 1.625 | 3/8 x 3/16 | .53 |

***keyway width by depth*

### NEMA Motor Flange Face Locations

| | 48CZ | | | 56C/140TC | | | 180TC | | | 210TC | | | 250TC | | |
|---|---|---|---|---|---|---|---|---|---|---|---|---|---|---|---|
| UNIT | LM | RQ | LQ | LM | RQ | LQ | LM1 | RQ | LQ1 | LM1 | RQ | LQ1 | LM1 | RQ | LQ1 |
| 213 | 5.63 | 3.09 | 3.46 | 6.07 | 3.09 | 3.46 | N/A | N/A | N/A | N/A | N/A | N/A | N/A | N/A | N/A |
| 215 | 5.63 | 3.09 | 3.46 | 6.07 | 3.09 | 3.46 | N/A | N/A | N/A | N/A | N/A | N/A | N/A | N/A | N/A |
| 218 | 5.63 | 3.09 | 3.46 | 6.07 | 3.09 | 3.46 | N/A | N/A | N/A | N/A | N/A | N/A | N/A | N/A | N/A |
| 220 | 5.63 | 3.09 | 3.46 | 6.07 | 3.09 | 3.46 | N/A | N/A | N/A | N/A | N/A | N/A | N/A | N/A | N/A |
| 224 | 5.63 | 3.09 | 3.46 | 6.07 | 3.09 | 3.46 | N/A | N/A | N/A | N/A | N/A | N/A | N/A | N/A | N/A |
| 226 | 5.63 | 3.09 | 3.46 | 6.07 | 3.09 | 3.46 | N/A | N/A | N/A | N/A | N/A | N/A | N/A | N/A | N/A |
| 230 | 6.16 | 3.62 | 3.99 | 6.60 | 3.62 | 3.99 | N/A | N/A | N/A | N/A | N/A | N/A | N/A | N/A | N/A |
| 232 | 6.16 | 3.62 | 3.99 | 6.60 | 3.62 | 3.99 | N/A | N/A | N/A | N/A | N/A | N/A | N/A | N/A | N/A |
| 242 | 6.63 | 4.06 | 4.46 | 7.07 | 4.06 | 4.46 | N/A | N/A | N/A | N/A | N/A | N/A | N/A | N/A | N/A |
| 252 | N/A | N/A | N/A | 8.32 | 4.82 | 5.19 | 9.32 | 5.13 | 5.62 | 9.32 | N/A | N/A | N/A | N/A | N/A |
| 2600 | N/A | N/A | N/A | 9.01 | 5.51 | 5.88 | 10.01 | 5.81 | 6.31 | 10.01 | 6.25 | 6.75 | N/A | N/A | N/A |
| 2700 | N/A | N/A | N/A | 9.01 | 5.51 | 5.88 | 10.01 | 5.81 | 6.31 | 10.01 | 6.25 | 6.75 | N/A | N/A | N/A |
| 2800 | N/A | N/A | N/A | 11.81 | 6.04 | 6.45 | 12.90 | 6.68 | 7.21 | 12.90 | 6.68 | 7.21 | 13.46 | 7.24 | 7.77 |
| 21000 | N/A | N/A | N/A | 13.21 | 7.35 | 7.85 | 14.30 | 7.98 | 8.61 | 14.30 | 7.98 | 8.61 | 14.86 | 8.54 | 9.17 |

### IEC B5 & B3/B5 Metric Motor Flange Face Locations

| | D63D | | D71D | | D80D | | D90D | | D100LD D112MD | | D132D | |
|---|---|---|---|---|---|---|---|---|---|---|---|---|
| UNIT | LQ | RQ | LQ | RQ | LQ | RQ | LQ | RQ | LQ | RQ | LQ | RQ |
| 213 | 2.62 | 2.45 | 2.65 | 2.47 | 2.89 | 2.71 | N/A | N/A | N/A | N/A | N/A | N/A |
| 215 | 2.62 | 2.45 | 2.65 | 2.47 | 2.89 | 2.71 | N/A | N/A | N/A | N/A | N/A | N/A |
| 218 | 2.62 | 2.45 | 2.65 | 2.47 | 2.89 | 2.71 | N/A | N/A | N/A | N/A | N/A | N/A |
| 220 | 2.62 | 2.45 | 2.65 | 2.47 | 2.89 | 2.71 | N/A | N/A | N/A | N/A | N/A | N/A |
| 224 | 2.62 | 2.45 | 2.65 | 2.47 | 2.89 | 2.71 | N/A | N/A | N/A | N/A | N/A | N/A |
| 226 | 2.62 | 2.45 | 2.65 | 2.47 | 2.89 | 2.71 | N/A | N/A | N/A | N/A | N/A | N/A |
| 230 | 3.15 | 2.98 | 3.18 | 3.00 | 3.42 | 3.24 | N/A | N/A | N/A | N/A | N/A | N/A |
| 232 | 3.15 | 2.98 | 3.18 | 3.00 | 3.42 | 3.24 | N/A | N/A | N/A | N/A | N/A | N/A |
| 242 | 3.62 | 3.43 | 3.65 | 3.44 | 3.89 | 3.68 | N/A | N/A | N/A | N/A | N/A | N/A |
| 252 | N/A | N/A | 4.28 | 4.09 | 4.90 | 4.72 | 4.90 | 4.72 | 5.30 | 5.07 | N/A | N/A |
| 2600 | N/A | N/A | 4.97 | 4.78 | 5.59 | 5.41 | 5.59 | 5.41 | 5.99 | 5.76 | N/A | N/A |
| 2700 | N/A | N/A | 4.97 | 4.78 | 5.59 | 5.41 | 5.59 | 5.41 | 5.99 | 5.76 | N/A | N/A |
| 2800 | N/A | N/A | N/A | N/A | N/A | N/A | 6.38 | 6.16 | 6.39 | 6.14 | 7.17 | 6.93 |
| 21000 | N/A | N/A | N/A | N/A | N/A | N/A | 7.78 | 7.46 | 7.78 | 7.45 | 8.57 | 8.24 |

*Note: Metric motor flanges are available in quill-style (DVMQ) only.*

## Metric Motor Data

### IEC B5 & B3/B5 Metric Motor Mounting Dimensions

*(All dimensions given in millimeters)*

| Frame | AJ | AK | BD | OD | BE | BORE | KWY.** | BF TAP |
|---|---|---|---|---|---|---|---|---|
| D63D | 115 | 95 | 117 | 131 | 10 | 11 | 4 x 2 | M8 x 1.25 |
| D71D | 130 | 110 | 132 | 146 | 11 | 14 | 5 x 2.5 | M8 x 1.25 |
| D80D | 165 | 130 | 165 | 184 | 15 | 19 | 6 x 3 | M10 x 1.50 |
| D90D | 165 | 130 | 165 | 184 | 15 | 24 | 8 x 3.5 | M10 x 1.50 |
| D100LD* | 215 | 180 | 216 | 237 | 18 | 28 | 8 x 3.5 | M12 x 1.75 |
| D132D | 265 | 230 | 267 | 290 | 18 | 38 | 10 x 4 | M12 x 1.75 |

**also applies to D112MD*
***keyway width by depth*

# Double Reduction

## Worm / Worm Dimensions

### Style DJ

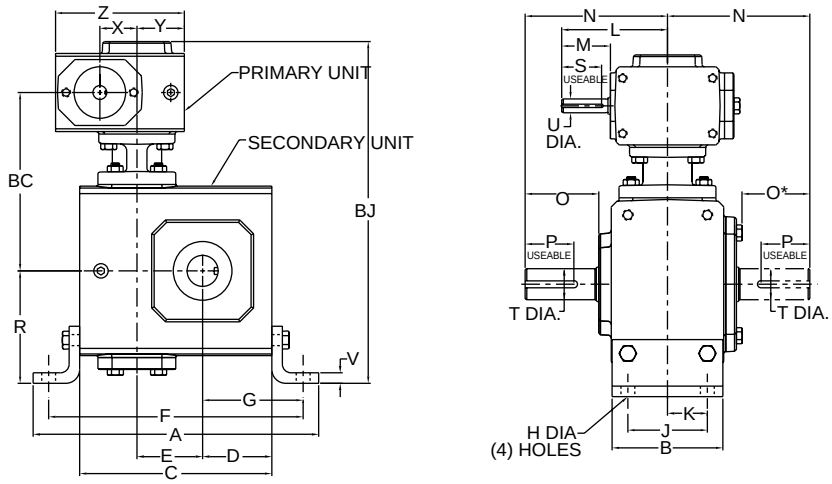


### Styles DJMQ & DJM

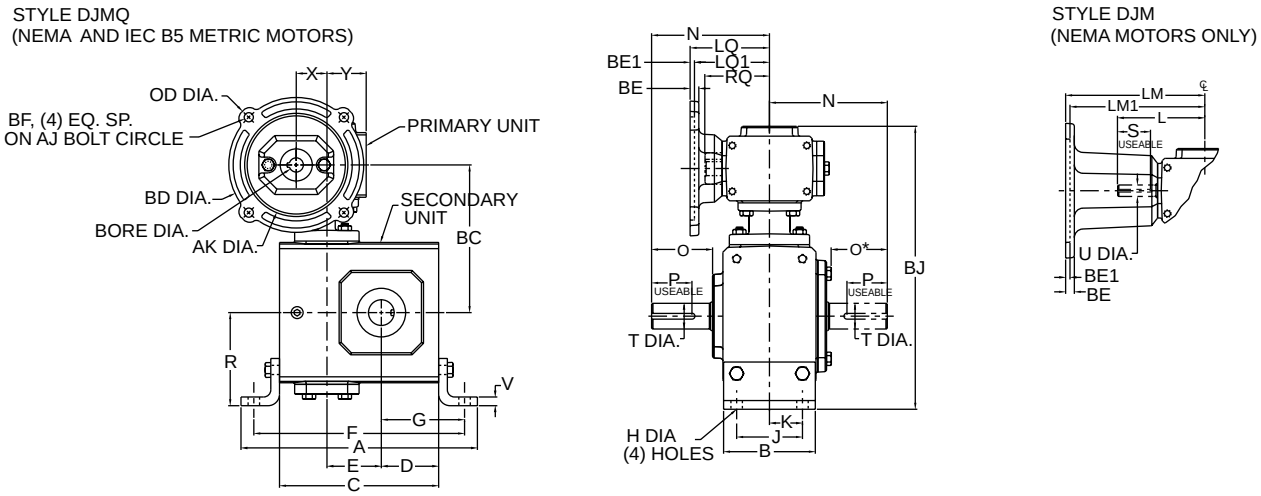


### Assemblies

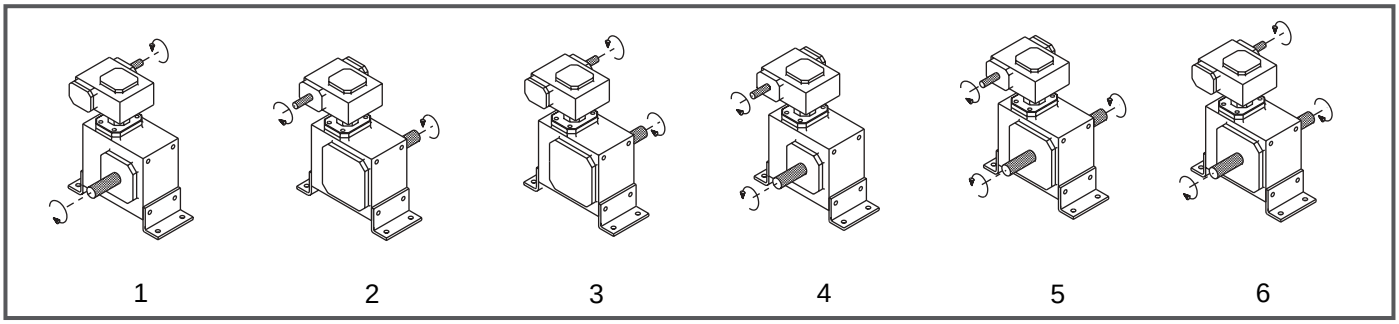


*Note: The input shaft may be rotated in either direction. Units are for mounting as shown. Contact factory for other mountings. Assembly positions also apply to motor flange units ("MQ" and "M").* ***See page 75 for additional assembly options.***

# Double Reduction

## Styles DJ, DJMQ, DJM

| UNIT | A | B | BC | BJ | C | D | E | F | G | H Dia. | J | K | L | M | N | O | O* | P** | R |
|---|---|---|---|---|---|---|---|---|---|---|---|---|---|---|---|---|---|---|---|
| 213 | 7.42 | 2.75 | 5.32 | 10.10 | 4.66 | 1.72 | 1.333 | 6.42 | 2.60 | .38 | 2.00 | 1.00 | 3.82 | 1.76 | 4.00 | 2.16 | 1.94 | 3/16 x 1.50 | 2.94 |
| 215 | 8.14 | 3.50 | 5.85 | 11.20 | 5.38 | 1.91 | 1.540 | 7.08 | 2.76 | .44 | 2.75 | 1.38 | 3.82 | 1.76 | 4.31 | 2.11 | 1.90 | 3/16 x 1.50 | 3.50 |
| 218 | 8.51 | 3.50 | 5.94 | 11.29 | 5.75 | 2.06 | 1.750 | 7.45 | 2.91 | .44 | 2.75 | 1.38 | 3.82 | 1.76 | 4.31 | 2.05 | 1.84 | 3/16 x 1.38 | 3.50 |
| 220 | 9.76 | 4.00 | 6.32 | 12.17 | 6.38 | 2.28 | 2.063 | 8.62 | 3.40 | .50 | 2.75 | 1.38 | 3.82 | 1.76 | 4.68 | 2.29 | 2.08 | 1/4 x 1.44 | 4.01 |
| 224 | 10.31 | 4.00 | 6.44 | 12.35 | 6.94 | 2.50 | 2.375 | 9.19 | 3.63 | .50 | 2.88 | 1.44 | 3.82 | 1.76 | 5.14 | 2.66 | 2.44 | 1/4 x 1.75 | 4.06 |
| 226 | 11.62 | 5.00 | 7.01 | 13.85 | 8.00 | 2.94 | 2.625 | 10.38 | 4.13 | .56 | 3.38 | 1.69 | 3.82 | 1.76 | 5.63 | 2.73 | 2.52 | 1/4 x 2.00 | 5.00 |
| 230 | 12.64 | 6.00 | 7.86 | 15.68 | 8.88 | 3.25 | 3.000 | 11.38 | 4.50 | .56 | 3.88 | 1.94 | 4.35 | 1.76 | 6.75 | 3.60 | 3.36 | 1/4 X 2.25 | 5.62 |
| 232 | 13.14 | 6.00 | 8.05 | 15.88 | 9.38 | 3.50 | 3.250 | 11.88 | 4.75 | .56 | 3.88 | 1.94 | 4.35 | 1.76 | 7.06 | 3.66 | 3.42 | 3/8 X 2.62 | 5.63 |
| 242 | 16.38 | 7.00 | 9.18 | 18.07 | 11.38 | 4.44 | 4.250 | 14.88 | 6.19 | .69 | 5.00 | 2.50 | 4.82 | 1.76 | 8.12 | 4.50 | 4.21 | 1/2 X 3.06 | 6.50 |
| 252 | 19.00 | 7.00 | 11.57 | 22.22 | 14.00 | 5.12 | 5.250 | 17.50 | 6.87 | .69 | 5.81 | 2.91 | 6.07 | 2.38 | 9.06 | 4.78 | 4.53 | 1/2 x 3.50 | 7.75 |

| UNIT | S** | T Dia. | U Dia. | V | X | Y | Z |
|---|---|---|---|---|---|---|---|
| 213 | 1/8 x 1.44 | .625 | .500 | .25 | 1.333 | 1.72 | 4.66 |
| 215 | 1/8 x 1.44 | .750 | .500 | .25 | 1.333 | 1.72 | 4.66 |
| 218 | 1/8 x 1.44 | .875 | .500 | .25 | 1.333 | 1.72 | 4.66 |
| 220 | 1/8 x 1.44 | 1.000 | .500 | .38 | 1.333 | 1.72 | 4.66 |
| 224 | 1/8 x 1.44 | 1.125 | .500 | .38 | 1.333 | 1.72 | 4.66 |
| 226 | 1/8 x 1.44 | 1.250 | .500 | .38 | 1.333 | 1.72 | 4.66 |
| 230 | 3/16 x 1.50 | 1.250 | .625 | .38 | 1.540 | 1.91 | 5.38 |
| 232 | 3/16 x 1.50 | 1.500 | .625 | .38 | 1.540 | 1.91 | 5.38 |
| 242 | 3/16 x 1.50 | 1.875 | .625 | .50 | 2.063 | 2.28 | 6.38 |
| 252 | 3/16 x 1.75 | 2.000 | .750 | .50 | 2.625 | 2.94 | 8.00 |

**applies to double output shaft*
***keyway width by length*

## NEMA Motor Data

### NEMA Motor Mounting Dimensions

| Frame | AJ | AK | BD | OD | BE | BE1 | BORE | KWY.** | BF |
|---|---|---|---|---|---|---|---|---|---|
| 48CZ | 3.75 | 3.00 | 3.88 | 4.36 | .38 | N/A | .500 | 1/8 x 1/16 | .28 |
| 56C | 5.88 | 4.50 | 5.88 | 6.64 | .38 | N/A | .625 | 3/16 x 3/32 | .41 |
| 140TC | 5.88 | 4.50 | 5.88 | 6.64 | .38 | N/A | .875 | 3/16 x 3/32 | .41 |
| 180TC | 7.25 | 8.50 | 9.00 | N/A | N/A | .50 | 1.125 | 1/4 x 1/8 | .53 |
| 210TC | 7.25 | 8.50 | 9.00 | N/A | N/A | .50 | 1.375 | 5/16 x 5/32 | .53 |

***keyway width by depth*

### NEMA Motor Flange Face Locations

| | 48CZ | | | 56C/140TC | | | 180TC | | | 210TC | | |
|---|---|---|---|---|---|---|---|---|---|---|---|---|
| UNIT | LM | RQ | LQ | LM | RQ | LQ | LM1 | RQ | LQ1 | LM1 | RQ | LQ1 |
| 213 | 5.63 | 3.09 | 3.46 | 6.07 | 3.09 | 3.46 | N/A | N/A | N/A | N/A | N/A | N/A |
| 215 | 5.63 | 3.09 | 3.46 | 6.07 | 3.09 | 3.46 | N/A | N/A | N/A | N/A | N/A | N/A |
| 218 | 5.63 | 3.09 | 3.46 | 6.07 | 3.09 | 3.46 | N/A | N/A | N/A | N/A | N/A | N/A |
| 220 | 5.63 | 3.09 | 3.46 | 6.07 | 3.09 | 3.46 | N/A | N/A | N/A | N/A | N/A | N/A |
| 224 | 5.63 | 3.09 | 3.46 | 6.07 | 3.09 | 3.46 | N/A | N/A | N/A | N/A | N/A | N/A |
| 226 | 5.63 | 3.09 | 3.46 | 6.07 | 3.09 | 3.46 | N/A | N/A | N/A | N/A | N/A | N/A |
| 230 | 6.16 | 3.62 | 3.99 | 6.60 | 3.62 | 3.99 | N/A | N/A | N/A | N/A | N/A | N/A |
| 232 | 6.16 | 3.62 | 3.99 | 6.60 | 3.62 | 3.99 | N/A | N/A | N/A | N/A | N/A | N/A |
| 242 | 6.63 | 4.06 | 4.46 | 7.07 | 4.06 | 4.46 | N/A | N/A | N/A | N/A | N/A | N/A |
| 252 | N/A | N/A | N/A | 8.32 | 4.82 | 5.19 | 9.32 | 5.13 | 5.62 | 9.32 | N/A | N/A |

*Note: All dimensions listed are for reference only. Contact factory for certified dimensions.*

WARNING *For safety, purchaser or user should provide protective guards over shaft extensions and any couplings, sheaves and belts, sprockets and chains, etc., mounted thereon.*

## Metric Motor Data

### IEC B5 & B3/B5 Metric Motor Flange Face Locations

| | D63D | | D71D | | D80D | | D90D | | D100LD D112MD | |
|---|---|---|---|---|---|---|---|---|---|---|
| UNIT | LQ | RQ | LQ | RQ | LQ | RQ | LQ | RQ | LQ | RQ |
| 213 | 2.62 | 2.45 | 2.65 | 2.47 | 2.89 | 2.71 | N/A | N/A | N/A | N/A |
| 215 | 2.62 | 2.45 | 2.65 | 2.47 | 2.89 | 2.71 | N/A | N/A | N/A | N/A |
| 218 | 2.62 | 2.45 | 2.65 | 2.47 | 2.89 | 2.71 | N/A | N/A | N/A | N/A |
| 220 | 2.62 | 2.45 | 2.65 | 2.47 | 2.89 | 2.71 | N/A | N/A | N/A | N/A |
| 224 | 2.62 | 2.45 | 2.65 | 2.47 | 2.89 | 2.71 | N/A | N/A | N/A | N/A |
| 226 | 2.62 | 2.45 | 2.65 | 2.47 | 2.89 | 2.71 | N/A | N/A | N/A | N/A |
| 230 | 3.15 | 2.98 | 3.18 | 3.00 | 3.42 | 3.24 | N/A | N/A | N/A | N/A |
| 232 | 3.15 | 2.98 | 3.18 | 3.00 | 3.42 | 3.24 | N/A | N/A | N/A | N/A |
| 242 | 3.62 | 3.43 | 3.65 | 3.44 | 3.89 | 3.68 | N/A | N/A | N/A | N/A |
| 252 | N/A | N/A | 4.28 | 4.09 | 4.90 | 4.72 | 4.90 | 4.72 | 5.30 | 5.07 |

*Note: Metric motor flanges are available in quill-style (DJMQ) only.*

### IEC B5 & B3/B5 Metric Motor Mounting Dimensions

*(All dimensions given in millimeters)*

| Frame | AJ | AK | BD | OD | BE | BORE | KWY.** | BF TAP |
|---|---|---|---|---|---|---|---|---|
| D63D | 115 | 95 | 117 | 131 | 10 | 11 | 4 x 2 | M8 x 1.25 |
| D71D | 130 | 110 | 132 | 146 | 11 | 14 | 5 x 2.5 | M8 x 1.25 |
| D80D | 165 | 130 | 165 | 184 | 15 | 19 | 6 x 3 | M10 x 1.50 |
| D90D | 165 | 130 | 165 | 184 | 15 | 24 | 8 x 3.5 | M10 x 1.50 |
| D100LD* | 215 | 180 | 216 | 237 | 18 | 28 | 8 x 3.5 | M12 x 1.75 |

**also applies to D112MD*
***keyway width by depth*

# Double Reduction

## Worm / Worm Dimensions

### Style DF

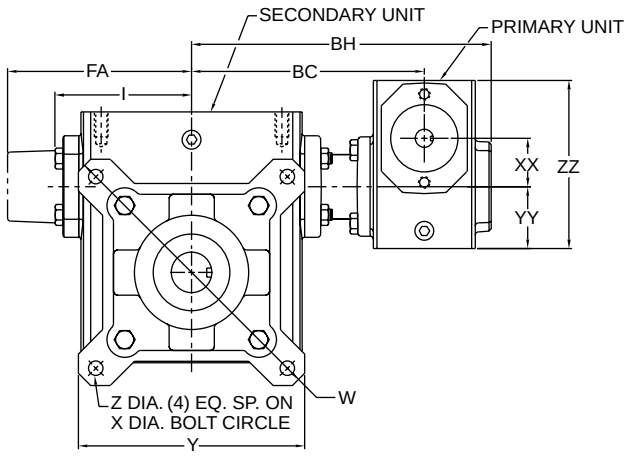


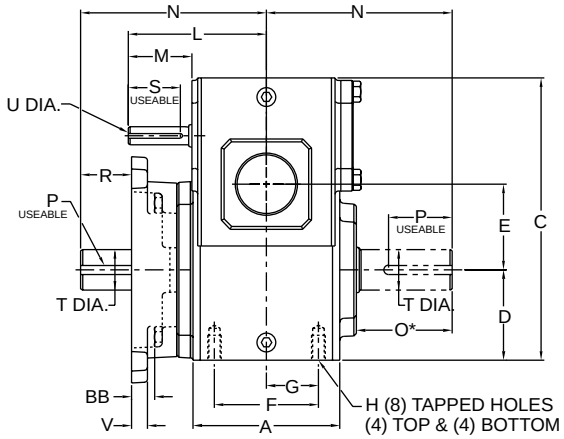


### Styles DFM & DFMQ

STYLE DFMQ
(NEMA AND IEC B5 METRIC MOTORS)

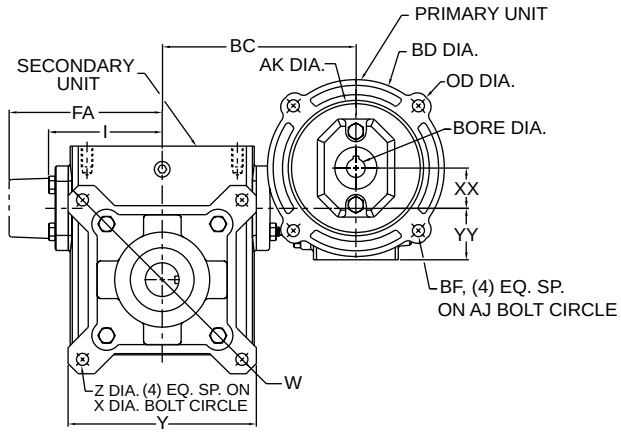


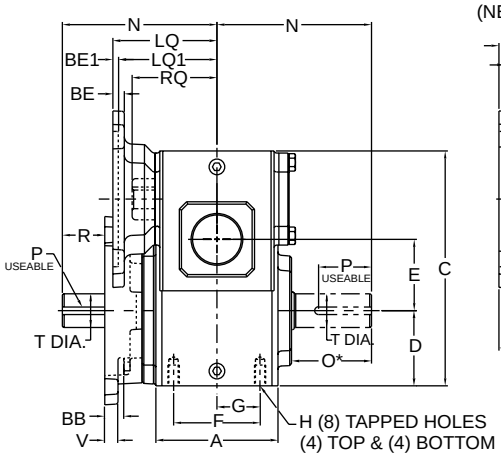


STYLE DFM
(NEMA MOTORS ONLY)

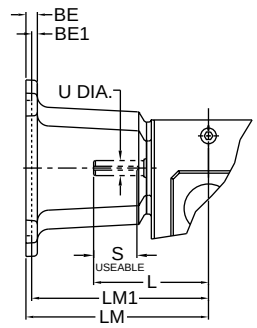


### Assemblies

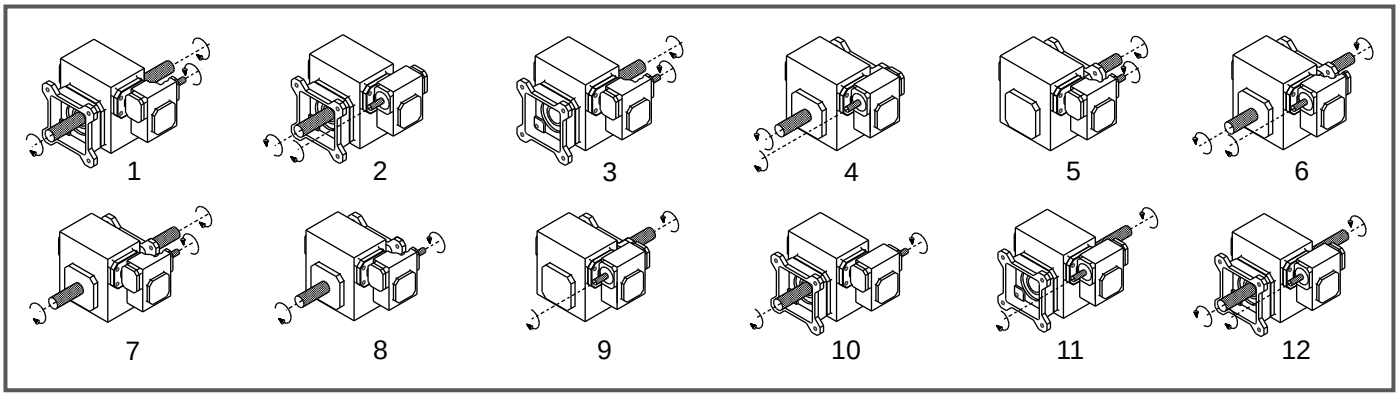


*Note: The input shaft may be rotated in either direction. Units are for mounting as shown. Contact factory for other mountings. Assembly positions also apply to motor flange units ("MQ" and "M").* ***See pages 76 and 77 for additional assembly options.***

# Double Reduction

## Styles DF, DFMQ, DFM

| UNIT | A | BB | BC | BH | C | D | E | F | FA | G | H | H Depth | I | L | M | N | O* | P** | R | S** |
|---|---|---|---|---|---|---|---|---|---|---|---|---|---|---|---|---|---|---|---|---|
| 213 | 2.82 | .08 | 5.32 | 7.16 | 5.99 | 1.72 | 1.333 | 2.00 | N/A | 1.00 | 5/16-18 | .50 | 2.61 | 3.82 | 1.76 | 4.00 | 2.16 | 3/16 x 1.50 | 1.48 | 1/8 x 1.44 |
| 215 | 3.44 | 1.22 | 5.85 | 7.69 | 6.38 | 1.91 | 1.540 | 2.75 | N/A | 1.38 | 5/16-18 | .63 | 3.14 | 3.82 | 1.76 | 4.31 | 2.11 | 3/16 x 1.50 | 1.44 | 1/8 x 1.44 |
| 218 | 3.56 | .11 | 5.94 | 7.79 | 6.75 | 2.06 | 1.750 | 2.75 | N/A | 1.38 | 5/16-18 | .63 | 3.24 | 3.82 | 1.76 | 4.31 | 2.05 | 3/16 x 1.38 | 1.13 | 1/8 x 1.44 |
| 220 | 3.81 | .55 | 6.32 | 8.16 | 7.28 | 2.28 | 2.063 | 3.00 | N/A | 1.50 | 5/16-18 | .63 | 3.61 | 3.82 | 1.76 | 4.68 | 2.29 | 1/4 x 1.44 | .99 | 1/8 x 1.44 |
| 224 | 4.06 | .51 | 6.44 | 8.29 | 7.81 | 2.50 | 2.375 | 2.88 | N/A | 1.44 | 3/8-16 | .69 | 3.77 | 3.82 | 1.76 | 5.14 | 2.66 | 1/4 x 1.75 | 1.47 | 1/8 x 1.44 |
| 226 | 4.84 | .04 | 7.01 | 8.85 | 8.50 | 2.94 | 2.625 | 3.38 | N/A | 1.69 | 3/8-16 | .69 | 4.34 | 3.82 | 1.76 | 5.63 | 2.73 | 1/4 x 2.00 | 1.99 | 1/8 x 1.44 |
| 230 | 5.25 | .07 | 7.86 | 10.06 | 9.72 | 3.25 | 3.000 | 4.00 | N/A | 2.00 | 7/16-14 | .88 | 4.84 | 4.35 | 1.76 | 6.75 | 3.60 | 1/4 X 2.25 | 3.03 | 3/16 x 1.50 |
| 232 | 5.75 | .07 | 8.05 | 10.25 | 10.22 | 3.50 | 3.250 | 4.00 | N/A | 2.00 | 7/16-14 | .88 | 5.02 | 4.35 | 1.76 | 7.06 | 3.66 | 3/8 X 2.62 | 3.08 | 3/16 x 1.50 |
| 242 | 6.13 | .06 | 9.18 | 11.57 | 12.78 | 4.44 | 4.250 | 5.00 | N/A | 2.50 | 5/8-11 | 1.00 | 6.10 | 4.82 | 1.76 | 8.12 | 4.50 | 1/2 X 3.06 | 3.62 | 3/16 x 1.50 |
| 252 | 7.19 | .34 | 11.57 | 14.47 | 15.43 | 5.12 | 5.250 | 5.81 | N/A | 2.91 | 5/8-11 | 1.25 | 7.50 | 6.07 | 2.38 | 9.06 | 4.78 | 1/2 x 3.50 | 3.50 | 3/16 x 1.75 |
| 2600 | 8.13 | 1.38 | 13.30 | 16.70 | 18.38 | 6.50 | 6.000 | 6.38 | 10.24 | 3.19 | 5/8-11 | 1.00 | N/A | 6.76 | 2.38 | 10.00 | 4.65 | 5/8 x 4.00 | 2.78 | 3/16 x 1.75 |
| 2700 | 7.63 | 1.57 | 12.96 | 16.90 | 20.46 | 7.59 | 7.000 | 5.50 | 10.63 | 2.75 | 1-8 | 1.56 | N/A | 6.76 | 2.38 | 11.76 | 5.65 | 5/8 x 4.00 | 4.32 | 3/16 x 1.75 |
| 2800 | 8.63 | 1.89 | 13.94 | 18.19 | 23.79 | 8.86 | 8.000 | 6.50 | 11.93 | 3.25 | 1-8 | 1.66 | N/A | 9.57 | 3.47 | 12.25 | 5.98 | 3/4 x 4.50 | 3.92 | 1/4 x 2.88 |
| 21000 | 9.53 | 1.85 | 17.05 | 22.30 | 29.24 | 10.36 | 10.000 | 6.88 | 14.34 | 3.44 | 1 1/4-7 | 2.04 | N/A | 10.88 | 3.38 | 14.75 | 6.76 | 7/8 x 5.00 | 5.70 | 1/4 x 3.00 |

| UNIT | T Dia. | U Dia. | V | W | X Dia. | XX | Y | YY | Z Dia. | ZZ |
|---|---|---|---|---|---|---|---|---|---|---|
| 213 | .625 | .500 | .38 | 5.92 | 5.00 | 1.333 | 4.50 | 1.72 | .34 | 4.66 |
| 215 | .750 | .500 | .38 | 5.88 | 5.00 | 1.333 | 4.50 | 1.72 | .34 | 4.66 |
| 218 | .875 | .500 | .38 | 6.64 | 5.88 | 1.333 | 5.00 | 1.72 | .34 | 4.66 |
| 220 | 1.000 | .500 | .44 | 7.88 | 7.00 | 1.333 | 5.99 | 1.72 | .41 | 4.66 |
| 224 | 1.125 | .500 | .44 | 8.39 | 7.50 | 1.333 | 6.27 | 1.72 | .41 | 4.66 |
| 226 | 1.250 | .500 | .50 | 8.88 | 8.00 | 1.333 | 6.67 | 1.72 | .41 | 4.66 |
| 230 | 1.250 | .625 | .50 | 9.89 | 9.00 | 1.540 | 7.37 | 1.91 | .41 | 5.38 |
| 232 | 1.500 | .625 | .50 | 9.89 | 9.00 | 1.540 | 7.37 | 1.91 | .41 | 5.38 |
| 242 | 1.875 | .625 | .62 | 12.95 | 11.50 | 2.063 | 9.65 | 2.28 | .56 | 6.38 |
| 252 | 2.000 | .750 | .75 | 15.50 | 14.00 | 2.625 | 11.75 | 2.94 | .69 | 8.00 |
| 2600 | 2.500 | .875 | .75 | 18.00 | 15.63 | 3.250 | 14.00 | 3.50 | .69 | 9.38 |
| 2700 | 2.750 | .875 | .75 | 21.00 | 18.38 | 3.250 | 15.63 | 3.50 | .78 | 9.38 |
| 2800 | 3.000 | 1.250 | .75 | 24.00 | 21.00 | 4.250 | 17.88 | 4.44 | 1.03 | 11.38 |
| 21000 | 3.750 | 1.250 | .75 | 29.00 | 25.00 | 5.250 | 21.19 | 5.12 | 1.03 | 14.00 |

**applies to double output shaft*
***keyway width by length*

*Note: All dimensions listed are for reference only. Contact factory for certified dimensions.*

WARNING *For safety, purchaser or user should provide protective guards over shaft extensions and any couplings, sheaves and belts, sprockets and chains, etc., mounted thereon.*

## NEMA Motor Data

### NEMA Motor Mounting Dimensions

| Frame | AJ | AK | BD | OD | BE | BE1 | BORE | KWY.** | BF |
|---|---|---|---|---|---|---|---|---|---|
| 48CZ | 3.75 | 3.00 | 3.88 | 4.36 | .38 | N/A | .500 | 1/8 x 1/16 | .28 |
| 56C | 5.88 | 4.50 | 5.88 | 6.64 | .38 | N/A | .625 | 3/16 x 3/32 | .41 |
| 140TC | 5.88 | 4.50 | 5.88 | 6.64 | .38 | N/A | .875 | 3/16 x 3/32 | .41 |
| 180TC | 7.25 | 8.50 | 9.00 | N/A | N/A | .50 | 1.125 | 1/4 x 1/8 | .53 |
| 210TC | 7.25 | 8.50 | 9.00 | N/A | N/A | .50 | 1.375 | 5/16 x 5/32 | .53 |
| 250TC | 7.25 | 8.50 | 9.00 | N/A | N/A | .50 | 1.625 | 3/8 x 3/16 | .53 |

***keyway width by depth*

### NEMA Motor Flange Face Locations

| | 48CZ | | | 56C/140TC | | | 180TC | | | 210TC | | | 250TC | | |
|---|---|---|---|---|---|---|---|---|---|---|---|---|---|---|---|
| UNIT | LM | RQ | LQ | LM | RQ | LQ | LM1 | RQ | LQ1 | LM1 | RQ | LQ1 | LM1 | RQ | LQ1 |
| 213 | 5.63 | 3.09 | 3.46 | 6.07 | 3.09 | 3.46 | N/A | N/A | N/A | N/A | N/A | N/A | N/A | N/A | N/A |
| 215 | 5.63 | 3.09 | 3.46 | 6.07 | 3.09 | 3.46 | N/A | N/A | N/A | N/A | N/A | N/A | N/A | N/A | N/A |
| 218 | 5.63 | 3.09 | 3.46 | 6.07 | 3.09 | 3.46 | N/A | N/A | N/A | N/A | N/A | N/A | N/A | N/A | N/A |
| 220 | 5.63 | 3.09 | 3.46 | 6.07 | 3.09 | 3.46 | N/A | N/A | N/A | N/A | N/A | N/A | N/A | N/A | N/A |
| 224 | 5.63 | 3.09 | 3.46 | 6.07 | 3.09 | 3.46 | N/A | N/A | N/A | N/A | N/A | N/A | N/A | N/A | N/A |
| 226 | 5.63 | 3.09 | 3.46 | 6.07 | 3.09 | 3.46 | N/A | N/A | N/A | N/A | N/A | N/A | N/A | N/A | N/A |
| 230 | 6.16 | 3.62 | 3.99 | 6.60 | 3.62 | 3.99 | N/A | N/A | N/A | N/A | N/A | N/A | N/A | N/A | N/A |
| 232 | 6.16 | 3.62 | 3.99 | 6.60 | 3.62 | 3.99 | N/A | N/A | N/A | N/A | N/A | N/A | N/A | N/A | N/A |
| 242 | 6.63 | 4.06 | 4.46 | 7.07 | 4.06 | 4.46 | N/A | N/A | N/A | N/A | N/A | N/A | N/A | N/A | N/A |
| 252 | N/A | N/A | N/A | 8.32 | 4.82 | 5.19 | 9.32 | 5.13 | 5.62 | 9.32 | N/A | N/A | N/A | N/A | N/A |
| 2600 | N/A | N/A | N/A | 9.01 | 5.51 | 5.88 | 10.01 | 5.81 | 6.31 | 10.01 | 6.25 | 6.75 | N/A | N/A | N/A |
| 2700 | N/A | N/A | N/A | 9.01 | 5.51 | 5.88 | 10.01 | 5.81 | 6.31 | 10.01 | 6.25 | 6.75 | N/A | N/A | N/A |
| 2800 | N/A | N/A | N/A | 11.81 | 6.04 | 6.45 | 12.90 | 6.68 | 7.21 | 12.90 | 6.68 | 7.21 | 13.46 | 7.24 | 7.77 |
| 21000 | N/A | N/A | N/A | 13.21 | 7.35 | 7.85 | 14.30 | 7.98 | 8.61 | 14.30 | 7.98 | 8.61 | 14.86 | 8.54 | 9.17 |

### IEC B5 & B3/B5 Metric Motor Flange Face Locations

| | D63D | | D71D | | D80D | | D90D | | D100LD D112MD | | D132D | |
|---|---|---|---|---|---|---|---|---|---|---|---|---|
| UNIT | LQ | RQ | LQ | RQ | LQ | RQ | LQ | RQ | LQ | RQ | LQ | RQ |
| 213 | 2.62 | 2.45 | 2.65 | 2.47 | 2.89 | 2.71 | N/A | N/A | N/A | N/A | N/A | N/A |
| 215 | 2.62 | 2.45 | 2.65 | 2.47 | 2.89 | 2.71 | N/A | N/A | N/A | N/A | N/A | N/A |
| 218 | 2.62 | 2.45 | 2.65 | 2.47 | 2.89 | 2.71 | N/A | N/A | N/A | N/A | N/A | N/A |
| 220 | 2.62 | 2.45 | 2.65 | 2.47 | 2.89 | 2.71 | N/A | N/A | N/A | N/A | N/A | N/A |
| 224 | 2.62 | 2.45 | 2.65 | 2.47 | 2.89 | 2.71 | N/A | N/A | N/A | N/A | N/A | N/A |
| 226 | 2.62 | 2.45 | 2.65 | 2.47 | 2.89 | 2.71 | N/A | N/A | N/A | N/A | N/A | N/A |
| 230 | 3.15 | 2.98 | 3.18 | 3.00 | 3.42 | 3.24 | N/A | N/A | N/A | N/A | N/A | N/A |
| 232 | 3.15 | 2.98 | 3.18 | 3.00 | 3.42 | 3.24 | N/A | N/A | N/A | N/A | N/A | N/A |
| 242 | 3.62 | 3.43 | 3.65 | 3.44 | 3.89 | 3.68 | N/A | N/A | N/A | N/A | N/A | N/A |
| 252 | N/A | N/A | 4.28 | 4.09 | 4.90 | 4.72 | 4.90 | 4.72 | 5.30 | 5.07 | N/A | N/A |
| 2600 | N/A | N/A | 4.97 | 4.78 | 5.59 | 5.41 | 5.59 | 5.41 | 5.99 | 5.76 | N/A | N/A |
| 2700 | N/A | N/A | 4.97 | 4.78 | 5.59 | 5.41 | 5.59 | 5.41 | 5.99 | 5.76 | N/A | N/A |
| 2800 | N/A | N/A | N/A | N/A | N/A | N/A | 6.38 | 6.16 | 6.39 | 6.14 | 7.17 | 6.93 |
| 21000 | N/A | N/A | N/A | N/A | N/A | N/A | 7.78 | 7.46 | 7.78 | 7.45 | 8.57 | 8.24 |

*Note: Metric motor flanges are available in quill-style (DFMQ) only.*

## Metric Motor Data

### IEC B5 & B3/B5 Metric Motor Mounting Dimensions

*(All dimensions given in millimeters)*

| Frame | AJ | AK | BD | OD | BE | BORE | KWY.** | BF TAP |
|---|---|---|---|---|---|---|---|---|
| D63D | 115 | 95 | 117 | 131 | 10 | 11 | 4 x 2 | M8 x 1.25 |
| D71D | 130 | 110 | 132 | 146 | 11 | 14 | 5 x 2.5 | M8 x 1.25 |
| D80D | 165 | 130 | 165 | 184 | 15 | 19 | 6 x 3 | M10 x 1.50 |
| D90D | 165 | 130 | 165 | 184 | 15 | 24 | 8 x 3.5 | M10 x 1.50 |
| D100LD* | 215 | 180 | 216 | 237 | 18 | 28 | 8 x 3.5 | M12 x 1.75 |
| D132D | 265 | 230 | 267 | 290 | 18 | 38 | 10 x 4 | M12 x 1.75 |

**also applies to D112MD*
***keyway width by depth*

# Double Reduction

## Worm / Worm Dimensions

### Style DH

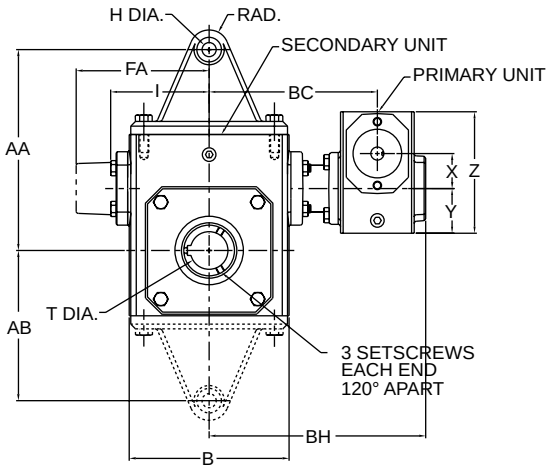


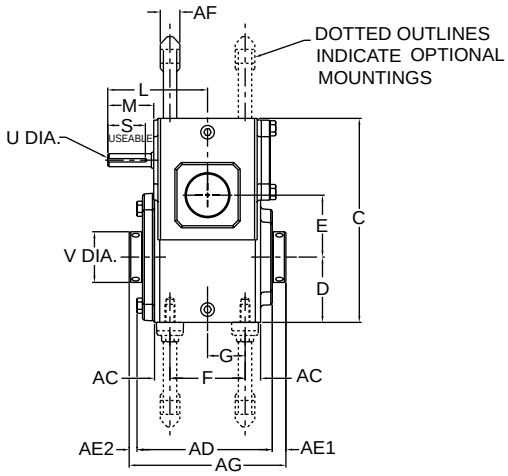


### Styles DHMQ & DHM

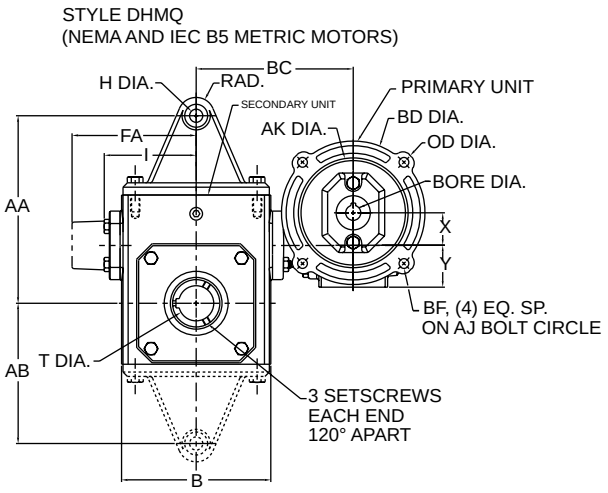


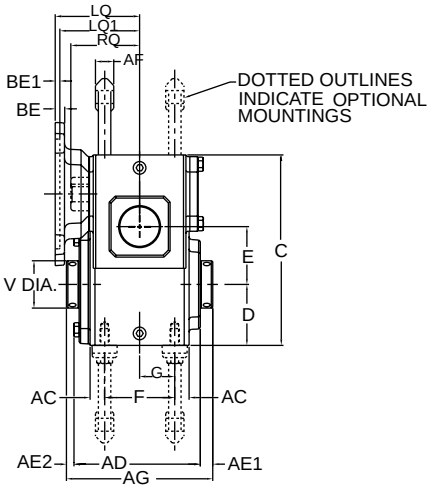


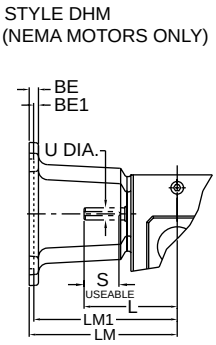


### Assemblies

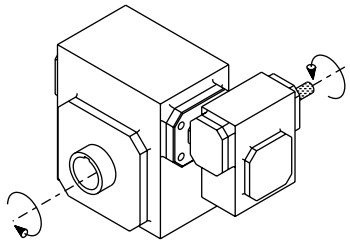

1

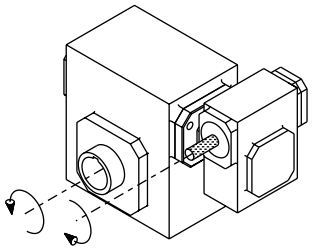

2

*Note: The input shaft may be rotated in either direction. Units are for mounting as shown. Contact factory for other mountings. Assembly positions also apply to motor flange units ("MQ" and "M").* ***See page 72 for additional assembly options.***

# Double Reduction

## Styles DH, DHMQ, DHM

| UNIT | AA | AB | AC | AD | AE1 | AE2 | AF | AG | B | BC | BH | C | D | E | F | FA | G | H Dia. | I | L | M |
|---|---|---|---|---|---|---|---|---|---|---|---|---|---|---|---|---|---|---|---|---|---|
| 213 | 4.19 | 2.97 | .41 | 3.90 | .53 | .32 | .25 | 4.75 | 3.80 | 5.32 | 7.16 | 4.66 | 1.72 | 1.333 | 2.00 | N/A | 1.00 | .53 | 2.61 | 3.82 | 1.76 |
| 215 | 5.97 | 4.41 | .35 | 4.61 | .51 | .30 | .75 | 5.42 | 5.19 | 5.85 | 7.69 | 5.38 | 1.91 | 1.540 | 2.75 | N/A | 1.38 | .53 | 3.14 | 3.82 | 1.76 |
| 218 | 6.19 | 4.56 | .41 | 4.73 | .49 | .28 | .75 | 5.50 | 5.19 | 5.94 | 7.79 | 5.75 | 2.06 | 1.750 | 2.75 | N/A | 1.38 | .53 | 3.24 | 3.82 | 1.76 |
| 220 | 7.24 | 5.43 | .41 | 4.99 | .61 | .40 | .75 | 6.00 | 5.80 | 6.32 | 8.16 | 6.38 | 2.28 | 2.063 | 3.00 | N/A | 1.50 | .53 | 3.61 | 3.82 | 1.76 |
| 224 | 7.69 | 5.75 | .59 | 5.18 | .51 | .31 | .75 | 6.00 | 6.12 | 6.44 | 8.29 | 6.94 | 2.50 | 2.375 | 2.88 | N/A | 1.44 | .53 | 3.77 | 3.82 | 1.76 |
| 226 | 8.81 | 6.69 | .73 | 6.01 | .60 | .39 | .75 | 7.00 | 7.38 | 7.01 | 8.85 | 8.00 | 2.94 | 2.625 | 3.38 | N/A | 1.69 | .53 | 4.34 | 3.82 | 1.76 |
| 230 | 10.63 | 8.25 | .63 | 6.53 | .60 | .36 | .75 | 7.50 | 8.12 | 7.86 | 10.06 | 8.88 | 3.25 | 3.000 | 4.00 | N/A | 2.00 | .53 | 4.84 | 4.35 | 1.76 |
| 232 | 10.88 | 8.50 | .88 | 7.04 | .54 | .29 | .75 | 7.88 | 8.75 | 8.05 | 10.25 | 9.38 | 3.50 | 3.250 | 4.00 | N/A | 2.00 | .53 | 5.02 | 4.35 | 1.76 |
| 242 | 11.94 | 9.44 | .56 | 7.53 | .63 | .34 | .75 | 8.50 | 10.25 | 9.18 | 11.57 | 11.38 | 4.44 | 4.250 | 5.00 | N/A | 2.50 | .53 | 6.10 | 4.82 | 1.76 |
| 252 | 13.88 | 10.12 | .69 | 8.85 | .97 | .68 | 1.00 | 10.50 | 13.00 | 11.57 | 14.47 | 14.00 | 5.12 | 5.250 | 5.81 | N/A | 2.91 | .66 | 7.50 | 6.07 | 2.38 |
| 2600 | 15.00 | 11.50 | .88 | 10.52 | .52 | .52 | .38 | 11.50 | 14.50 | 13.30 | 16.70 | 16.50 | 6.50 | 6.000 | 6.38 | 10.24 | 3.19 | .66 | N/A | 6.76 | 2.38 |
| 2700 | N/A | N/A | 1.06 | 11.36 | 1.09 | 1.09 | N/A | 13.50 | 14.88 | 12.96 | 16.90 | 18.91 | 7.59 | 7.000 | 5.50 | 10.63 | 2.75 | N/A | N/A | 6.76 | 2.38 |
| 2800 | N/A | N/A | 1.06 | 12.48 | 1.03 | 1.03 | N/A | 14.50 | 17.00 | 13.94 | 18.19 | 20.96 | 8.86 | 8.000 | 6.50 | 11.93 | 3.25 | N/A | N/A | 9.57 | 3.47 |
| 21000 | N/A | N/A | 1.33 | 15.78 | 1.39 | 1.39 | N/A | 18.50 | 20.88 | 17.05 | 22.30 | 25.47 | 10.36 | 10.000 | 6.88 | 14.34 | 3.44 | N/A | N/A | 10.88 | 3.38 |

| UNIT | RAD. | S** | T-max* | T-kwy*** | U Dia. | V Dia. | X | Y | Z |
|---|---|---|---|---|---|---|---|---|---|
| 213 | .50 | 1/8 x 1.44 | .625 | 3/16 x 3/32 | .500 | 1.00 | 1.333 | 1.72 | 4.66 |
| 215 | .75 | 1/8 x 1.44 | .625 | 3/16 x 3/32 | .500 | 1.00 | 1.333 | 1.72 | 4.66 |
| 218 | .75 | 1/8 x 1.44 | 1.000 | 1/4 x 1/8 | .500 | 1.44 | 1.333 | 1.72 | 4.66 |
| 220 | .75 | 1/8 x 1.44 | 1.438 | 3/8 x 3/16 | .500 | 1.94 | 1.333 | 1.72 | 4.66 |
| 224 | .75 | 1/8 x 1.44 | 1.438 | 3/8 x 3/16 | .500 | 1.94 | 1.333 | 1.72 | 4.66 |
| 226 | .75 | 1/8 x 1.44 | 1.438 | 3/8 x 3/16 | .500 | 1.94 | 1.333 | 1.72 | 4.66 |
| 230 | .88 | 3/16 x 1.50 | 1.938 | 1/2 x 1/4 | .625 | 2.51 | 1.540 | 1.91 | 5.38 |
| 232 | .88 | 3/16 x 1.50 | 1.938 | 1/2/x 1/4 | .625 | 2.51 | 1.540 | 1.91 | 5.38 |
| 242 | .75 | 3/16 x 1.50 | 2.188 | 1/2 x 1/4 | .625 | 2.75 | 2.063 | 2.28 | 6.38 |
| 252 | 1.00 | 3/16 x 1.75 | 3.438 | 7/8 x 7/16 | .750 | 4.26 | 2.625 | 2.94 | 8.00 |
| 2600 | .69 | 3/16 x 1.75 | 3.438 | 7/8 x 7/16 | .875 | 4.18 | 3.250 | 3.50 | 9.38 |
| 2700 | N/A | 3/16 x 1.75 | 3.938 | 1 x 1/2 | .875 | 4.92 | 3.250 | 3.50 | 9.38 |
| 2800 | N/A | 1/4 x 2.88 | 4.438 | 1 x 1/2 | 1.250 | 5.55 | 4.250 | 4.44 | 11.38 |
| 21000 | N/A | 1/4 x 3.00 | 5.438 | 1-1/4 x 5/8 | 1.250 | 6.67 | 5.250 | 5.12 | 14.00 |

**T dimensions are for max. bore diameter.*
*For other bore diameters refer to catalog page 52 or 167.*
***keyway width by length*
****keyway width by depth*

*Note: All dimensions listed are for reference only. Contact factory for certified dimensions.*

WARNING *For safety, purchaser or user should provide protective guards over shaft extensions and any couplings, sheaves and belts, sprockets and chains, etc., mounted thereon.*

## NEMA Motor Data

### NEMA Motor Mounting Dimensions

| Frame | AJ | AK | BD | OD | BE | BE1 | BORE | KWY.** | BF |
|---|---|---|---|---|---|---|---|---|---|
| 48CZ | 3.75 | 3.00 | 3.88 | 4.36 | .38 | N/A | .500 | 1/8 x 1/16 | .28 |
| 56C | 5.88 | 4.50 | 5.88 | 6.64 | .38 | N/A | .625 | 3/16 x 3/32 | .41 |
| 140TC | 5.88 | 4.50 | 5.88 | 6.64 | .38 | N/A | .875 | 3/16 x 3/32 | .41 |
| 180TC | 7.25 | 8.50 | 9.00 | N/A | N/A | .50 | 1.125 | 1/4 x 1/8 | .53 |
| 210TC | 7.25 | 8.50 | 9.00 | N/A | N/A | .50 | 1.375 | 5/16 x 5/32 | .53 |
| 250TC | 7.25 | 8.50 | 9.00 | N/A | N/A | .50 | 1.625 | 3/8 x 3/16 | .53 |

***keyway width by depth*

### NEMA Motor Flange Face Locations

| | 48CZ | | | 56C/140TC | | | 180TC | | | 210TC | | | 250TC | | |
|---|---|---|---|---|---|---|---|---|---|---|---|---|---|---|---|
| UNIT | LM | RQ | LQ | LM | RQ | LQ | LM1 | RQ | LQ1 | LM1 | RQ | LQ1 | LM1 | RQ | LQ1 |
| 213 | 5.63 | 3.09 | 3.46 | 6.07 | 3.09 | 3.46 | N/A | N/A | N/A | N/A | N/A | N/A | N/A | N/A | N/A |
| 215 | 5.63 | 3.09 | 3.46 | 6.07 | 3.09 | 3.46 | N/A | N/A | N/A | N/A | N/A | N/A | N/A | N/A | N/A |
| 218 | 5.63 | 3.09 | 3.46 | 6.07 | 3.09 | 3.46 | N/A | N/A | N/A | N/A | N/A | N/A | N/A | N/A | N/A |
| 220 | 5.63 | 3.09 | 3.46 | 6.07 | 3.09 | 3.46 | N/A | N/A | N/A | N/A | N/A | N/A | N/A | N/A | N/A |
| 224 | 5.63 | 3.09 | 3.46 | 6.07 | 3.09 | 3.46 | N/A | N/A | N/A | N/A | N/A | N/A | N/A | N/A | N/A |
| 226 | 5.63 | 3.09 | 3.46 | 6.07 | 3.09 | 3.46 | N/A | N/A | N/A | N/A | N/A | N/A | N/A | N/A | N/A |
| 230 | 6.16 | 3.62 | 3.99 | 6.60 | 3.62 | 3.99 | N/A | N/A | N/A | N/A | N/A | N/A | N/A | N/A | N/A |
| 232 | 6.16 | 3.62 | 3.99 | 6.60 | 3.62 | 3.99 | N/A | N/A | N/A | N/A | N/A | N/A | N/A | N/A | N/A |
| 242 | 6.63 | 4.06 | 4.46 | 7.07 | 4.06 | 4.46 | N/A | N/A | N/A | N/A | N/A | N/A | N/A | N/A | N/A |
| 252 | N/A | N/A | N/A | 8.32 | 4.82 | 5.19 | 9.32 | 5.13 | 5.62 | 9.32 | N/A | N/A | N/A | N/A | N/A |
| 2600 | N/A | N/A | N/A | 9.01 | 5.51 | 5.88 | 10.01 | 5.81 | 6.31 | 10.01 | 6.25 | 6.75 | N/A | N/A | N/A |
| 2700 | N/A | N/A | N/A | 9.01 | 5.51 | 5.88 | 10.01 | 5.81 | 6.31 | 10.01 | 6.25 | 6.75 | N/A | N/A | N/A |
| 2800 | N/A | N/A | N/A | 11.81 | 6.04 | 6.45 | 12.90 | 6.68 | 7.21 | 12.90 | 6.68 | 7.21 | 13.46 | 7.24 | 7.77 |
| 21000 | N/A | N/A | N/A | 13.21 | 7.35 | 7.85 | 14.30 | 7.98 | 8.61 | 14.30 | 7.98 | 8.61 | 14.86 | 8.54 | 9.17 |

### IEC B5 & B3/B5 Metric Motor Flange Face Locations

| | D63D | | D71D | | D80D | | D90D | | D100LD D112MD | | D132D | |
|---|---|---|---|---|---|---|---|---|---|---|---|---|
| UNIT | LQ | RQ | LQ | RQ | LQ | RQ | LQ | RQ | LQ | RQ | LQ | RQ |
| 213 | 2.62 | 2.45 | 2.65 | 2.47 | 2.89 | 2.71 | N/A | N/A | N/A | N/A | N/A | N/A |
| 215 | 2.62 | 2.45 | 2.65 | 2.47 | 2.89 | 2.71 | N/A | N/A | N/A | N/A | N/A | N/A |
| 218 | 2.62 | 2.45 | 2.65 | 2.47 | 2.89 | 2.71 | N/A | N/A | N/A | N/A | N/A | N/A |
| 220 | 2.62 | 2.45 | 2.65 | 2.47 | 2.89 | 2.71 | N/A | N/A | N/A | N/A | N/A | N/A |
| 224 | 2.62 | 2.45 | 2.65 | 2.47 | 2.89 | 2.71 | N/A | N/A | N/A | N/A | N/A | N/A |
| 226 | 2.62 | 2.45 | 2.65 | 2.47 | 2.89 | 2.71 | N/A | N/A | N/A | N/A | N/A | N/A |
| 230 | 3.15 | 2.98 | 3.18 | 3.00 | 3.42 | 3.24 | N/A | N/A | N/A | N/A | N/A | N/A |
| 232 | 3.15 | 2.98 | 3.18 | 3.00 | 3.42 | 3.24 | N/A | N/A | N/A | N/A | N/A | N/A |
| 242 | 3.62 | 3.43 | 3.65 | 3.44 | 3.89 | 3.68 | N/A | N/A | N/A | N/A | N/A | N/A |
| 252 | N/A | N/A | 4.28 | 4.09 | 4.90 | 4.72 | 4.90 | 4.72 | 5.30 | 5.07 | N/A | N/A |
| 2600 | N/A | N/A | 4.97 | 4.78 | 5.59 | 5.41 | 5.59 | 5.41 | 5.99 | 5.76 | N/A | N/A |
| 2700 | N/A | N/A | 4.97 | 4.78 | 5.59 | 5.41 | 5.59 | 5.41 | 5.99 | 5.76 | N/A | N/A |
| 2800 | N/A | N/A | N/A | N/A | N/A | N/A | 6.38 | 6.16 | 6.39 | 6.14 | 7.17 | 6.93 |
| 21000 | N/A | N/A | N/A | N/A | N/A | N/A | 7.78 | 7.46 | 7.78 | 7.45 | 8.57 | 8.24 |

*Note: Metric motor flanges are available in quill style (DHMQ) only.*

## Metric Motor Data

### IEC B5 & B3/B5 Metric Motor Mounting Dimensions

*(All dimensions given in millimeters)*

| Frame | AJ | AK | BD | OD | BE | BORE | KWY.** | BF TAP |
|---|---|---|---|---|---|---|---|---|
| D63D | 115 | 95 | 117 | 131 | 10 | 11 | 4 x 2 | M8 x 1.25 |
| D71D | 130 | 110 | 132 | 146 | 11 | 14 | 5 x 2.5 | M8 x 1.25 |
| D80D | 165 | 130 | 165 | 184 | 15 | 19 | 6 x 3 | M10 x 1.50 |
| D90D | 165 | 130 | 165 | 184 | 15 | 24 | 8 x 3.5 | M10 x 1.50 |
| D100LD* | 215 | 180 | 216 | 237 | 18 | 28 | 8 x 3.5 | M12 x 1.75 |
| D132D | 265 | 230 | 267 | 290 | 18 | 38 | 10 x 4 | M12 x 1.75 |

**also applies to D112MD*
***keyway width by depth*

# Double Reduction

## Worm / Worm Dimensions

### Style DFH

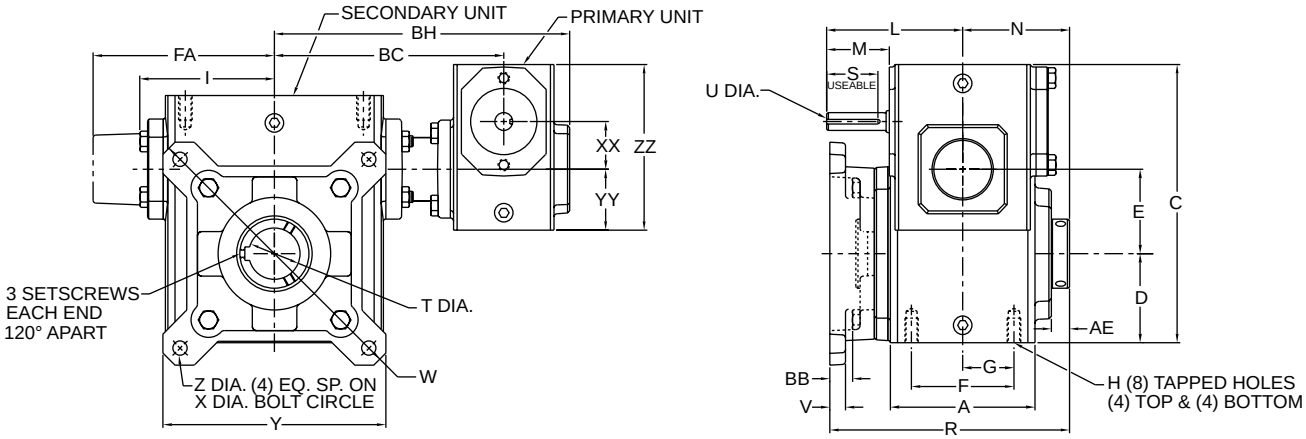


### Styles DFHMQ & DFHM

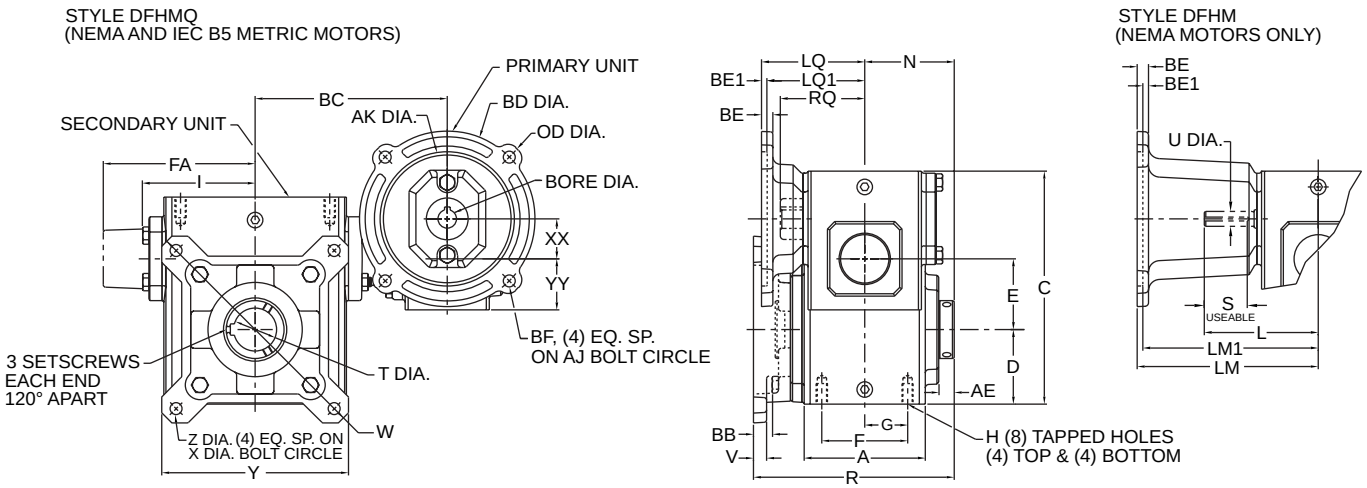


### Assemblies

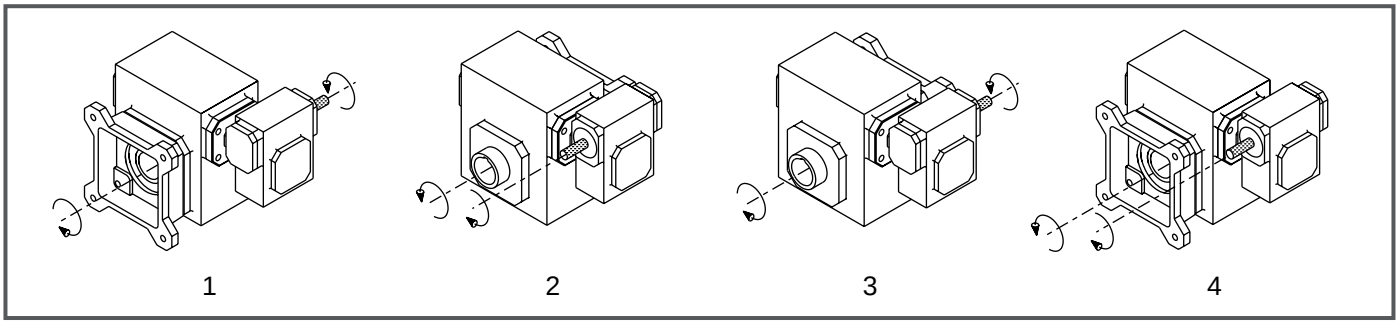


*Note: The input shaft may be rotated in either direction. Units are for mounting as shown. Contact factory for other mountings. Assembly positions also apply to motor flange units ("MQ" and "M").* ***See page 78 for additional assembly options.***

# Double Reduction

## Styles DFH, DFHMQ, DFHM

| UNIT | A | AE | BB | BC | BH | C | D | E | F | FA | G | H | H Depth | I | L | M | N | R | S** | T-max* |
|---|---|---|---|---|---|---|---|---|---|---|---|---|---|---|---|---|---|---|---|---|
| 213 | 2.82 | .53 | .08 | 5.32 | 7.16 | 5.99 | 1.72 | 1.333 | 2.00 | N/A | 1.00 | 5/16-18 | .50 | 2.61 | 3.82 | 1.76 | 2.38 | 4.90 | 1/8 x 1.44 | .625 |
| 215 | 3.44 | .51 | 1.22 | 5.85 | 7.69 | 6.38 | 1.91 | 1.540 | 2.75 | N/A | 1.38 | 5/16-18 | .63 | 3.14 | 3.82 | 1.76 | 2.71 | 6.72 | 1/8 x 1.44 | .625 |
| 218 | 3.56 | .49 | .11 | 5.94 | 7.79 | 6.75 | 2.06 | 1.750 | 2.75 | N/A | 1.38 | 5/16-18 | .63 | 3.24 | 3.82 | 1.76 | 2.75 | 5.94 | 1/8 x 1.44 | 1.000 |
| 220 | 3.81 | .61 | .55 | 6.32 | 8.16 | 7.28 | 2.28 | 2.063 | 3.00 | N/A | 1.50 | 5/16-18 | .63 | 3.61 | 3.82 | 1.76 | 3.00 | 6.69 | 1/8 x 1.44 | 1.438 |
| 224 | 4.06 | .51 | .51 | 6.44 | 8.29 | 7.81 | 2.50 | 2.375 | 2.88 | N/A | 1.44 | 3/8-16 | .69 | 3.77 | 3.82 | 1.76 | 3.00 | 6.73 | 1/8 x 1.44 | 1.438 |
| 226 | 4.84 | .60 | .04 | 7.01 | 8.85 | 8.50 | 2.94 | 2.625 | 3.38 | N/A | 1.69 | 3/8-16 | .69 | 4.34 | 3.82 | 1.76 | 3.50 | 7.20 | 1/8 x 1.44 | 1.438 |
| 230 | 5.25 | .60 | .07 | 7.86 | 10.06 | 9.72 | 3.25 | 3.000 | 4.00 | N/A | 2.00 | 7/16-14 | .88 | 4.84 | 4.35 | 1.76 | 3.75 | 7.53 | 3/16 x 1.50 | 1.938 |
| 232 | 5.75 | .54 | .07 | 8.05 | 10.25 | 10.22 | 3.50 | 3.250 | 4.00 | N/A | 2.00 | 7/16-14 | .88 | 5.02 | 4.35 | 1.76 | 3.94 | 7.97 | 3/16 x 1.50 | 1.938 |
| 242 | 6.13 | .63 | .06 | 9.18 | 11.57 | 12.78 | 4.44 | 4.250 | 5.00 | N/A | 2.50 | 5/8-11 | 1.00 | 6.10 | 4.82 | 1.76 | 4.25 | 8.81 | 3/16 x 1.50 | 2.188 |
| 252 | 7.19 | .97 | .34 | 11.57 | 14.47 | 15.43 | 5.12 | 5.250 | 5.81 | N/A | 2.91 | 5/8-11 | 1.25 | 7.50 | 6.07 | 2.38 | 5.25 | 10.87 | 3/16 x 1.75 | 3.438 |
| 2600 | 8.13 | .52 | 1.38 | 13.30 | 16.70 | 18.38 | 6.50 | 6.000 | 6.38 | 10.24 | 3.19 | 5/8-11 | 1.00 | N/A | 6.76 | 2.38 | 5.75 | 13.01 | 3/16 x 1.75 | 3.438 |
| 2700 | 7.63 | 1.09 | 1.57 | 12.96 | 16.90 | 20.46 | 7.59 | 7.000 | 5.50 | 10.63 | 2.75 | 1-8 | 1.56 | N/A | 6.76 | 2.38 | 6.75 | 14.20 | 3/16 x 1.75 | 3.938 |
| 2800 | 8.63 | 1.03 | 1.89 | 13.94 | 18.19 | 23.79 | 8.86 | 8.000 | 6.50 | 11.93 | 3.25 | 1-8 | 1.66 | N/A | 9.57 | 3.47 | 7.25 | 15.59 | 1/4 x 2.88 | 4.438 |
| 21000 | 9.53 | 1.39 | 1.85 | 17.05 | 22.30 | 29.24 | 10.36 | 10.000 | 6.88 | 14.34 | 3.44 | 1 1/4-7 | 2.04 | N/A | 10.88 | 3.38 | 9.25 | 18.32 | 1/4 x 3.00 | 5.438 |

| UNIT | T-kwy*** | U Dia. | V | W | X Dia. | XX | Y | YY | Z Dia. | ZZ |
|---|---|---|---|---|---|---|---|---|---|---|
| 213 | 3/16 x 3/32 | .500 | .38 | 5.92 | 5.00 | 1.333 | 4.50 | 1.72 | .34 | 4.66 |
| 215 | 3/16 x 3/32 | .500 | .38 | 5.88 | 5.00 | 1.333 | 4.50 | 1.72 | .34 | 4.66 |
| 218 | 1/4 x 1/8 | .500 | .38 | 6.64 | 5.88 | 1.333 | 5.00 | 1.72 | .34 | 4.66 |
| 220 | 3/8 x 3/16 | .500 | .44 | 7.88 | 7.00 | 1.333 | 5.99 | 1.72 | .41 | 4.66 |
| 224 | 3/8 x 3/16 | .500 | .44 | 8.39 | 7.50 | 1.333 | 6.27 | 1.72 | .41 | 4.66 |
| 226 | 3/8 x 3/16 | .500 | .50 | 8.88 | 8.00 | 1.333 | 6.67 | 1.72 | .41 | 4.66 |
| 230 | 1/2 x 1/4 | .625 | .50 | 9.89 | 9.00 | 1.540 | 7.37 | 1.91 | .41 | 5.38 |
| 232 | 1/2/x 1/4 | .625 | .50 | 9.89 | 9.00 | 1.540 | 7.37 | 1.91 | .41 | 5.38 |
| 242 | 1/2 x 1/4 | .625 | .62 | 12.95 | 11.50 | 2.063 | 9.65 | 2.28 | .56 | 6.38 |
| 252 | 7/8 x 7/16 | .750 | .75 | 15.50 | 14.00 | 2.625 | 11.75 | 2.94 | .69 | 8.00 |
| 2600 | 7/8 x 7/16 | .875 | .75 | 18.00 | 15.63 | 3.250 | 14.00 | 3.50 | .69 | 9.38 |
| 2700 | 1 x 1/2 | .875 | .75 | 21.00 | 18.38 | 3.250 | 15.63 | 3.50 | .78 | 9.38 |
| 2800 | 1 x 1/2 | 1.250 | .75 | 24.00 | 21.00 | 4.250 | 17.88 | 4.44 | 1.03 | 11.38 |
| 21000 | 1-1/4 x 5/8 | 1.250 | 1.00 | 29.00 | 25.00 | 5.250 | 21.19 | 5.12 | 1.03 | 14.00 |

**T dimensions are for max. bore diameter.*
*For other bore dimensions refer to catalog page 52 or 167.*
***keyway width by length*
****keyway width by depth*

*Note: All dimensions listed are for reference only. Contact factory for certified dimensions.*

WARNING *For safety, purchaser or user should provide protective guards over shaft extensions and any couplings, sheaves and belts, sprockets and chains, etc., mounted thereon.*

## NEMA Motor Data

### NEMA Motor Mounting Dimensions

| Frame | AJ | AK | BD | OD | BE | BE1 | BORE | KWY.** | BF |
|---|---|---|---|---|---|---|---|---|---|
| 48CZ | 3.75 | 3.00 | 3.88 | 4.36 | .38 | N/A | .500 | 1/8 x 1/16 | .28 |
| 56C | 5.88 | 4.50 | 5.88 | 6.64 | .38 | N/A | .625 | 3/16 x 3/32 | .41 |
| 140TC | 5.88 | 4.50 | 5.88 | 6.64 | .38 | N/A | .875 | 3/16 x 3/32 | .41 |
| 180TC | 7.25 | 8.50 | 9.00 | N/A | N/A | .50 | 1.125 | 1/4 x 1/8 | .53 |
| 210TC | 7.25 | 8.50 | 9.00 | N/A | N/A | .50 | 1.375 | 5/16 x 5/32 | .53 |
| 250TC | 7.25 | 8.50 | 9.00 | N/A | N/A | .50 | 1.625 | 3/8 x 3/16 | .53 |

***keyway width by depth*

### NEMA Motor Flange Face Locations

| | 48CZ | | | 56C/140TC | | | 180TC | | | 210TC | | | 250TC | | |
|---|---|---|---|---|---|---|---|---|---|---|---|---|---|---|---|
| UNIT | LM | RQ | LQ | LM | RQ | LQ | LM1 | RQ | LQ1 | LM1 | RQ | LQ1 | LM1 | RQ | LQ1 |
| 213 | 5.63 | 3.09 | 3.46 | 6.07 | 3.09 | 3.46 | N/A | N/A | N/A | N/A | N/A | N/A | N/A | N/A | N/A |
| 215 | 5.63 | 3.09 | 3.46 | 6.07 | 3.09 | 3.46 | N/A | N/A | N/A | N/A | N/A | N/A | N/A | N/A | N/A |
| 218 | 5.63 | 3.09 | 3.46 | 6.07 | 3.09 | 3.46 | N/A | N/A | N/A | N/A | N/A | N/A | N/A | N/A | N/A |
| 220 | 5.63 | 3.09 | 3.46 | 6.07 | 3.09 | 3.46 | N/A | N/A | N/A | N/A | N/A | N/A | N/A | N/A | N/A |
| 224 | 5.63 | 3.09 | 3.46 | 6.07 | 3.09 | 3.46 | N/A | N/A | N/A | N/A | N/A | N/A | N/A | N/A | N/A |
| 226 | 5.63 | 3.09 | 3.46 | 6.07 | 3.09 | 3.46 | N/A | N/A | N/A | N/A | N/A | N/A | N/A | N/A | N/A |
| 230 | 6.16 | 3.62 | 3.99 | 6.60 | 3.62 | 3.99 | N/A | N/A | N/A | N/A | N/A | N/A | N/A | N/A | N/A |
| 232 | 6.16 | 3.62 | 3.99 | 6.60 | 3.62 | 3.99 | N/A | N/A | N/A | N/A | N/A | N/A | N/A | N/A | N/A |
| 242 | 6.63 | 4.06 | 4.46 | 7.07 | 4.06 | 4.46 | N/A | N/A | N/A | N/A | N/A | N/A | N/A | N/A | N/A |
| 252 | N/A | N/A | N/A | 8.32 | 4.82 | 5.19 | 9.32 | 5.13 | 5.62 | 9.32 | N/A | N/A | N/A | N/A | N/A |
| 2600 | N/A | N/A | N/A | 9.01 | 5.51 | 5.88 | 10.01 | 5.81 | 6.31 | 10.01 | 6.25 | 6.75 | N/A | N/A | N/A |
| 2700 | N/A | N/A | N/A | 9.01 | 5.51 | 5.88 | 10.01 | 5.81 | 6.31 | 10.01 | 6.25 | 6.75 | N/A | N/A | N/A |
| 2800 | N/A | N/A | N/A | 11.81 | 6.04 | 6.45 | 12.90 | 6.68 | 7.21 | 12.90 | 6.68 | 7.21 | 13.46 | 7.24 | 7.77 |
| 21000 | N/A | N/A | N/A | 13.21 | 7.35 | 7.85 | 14.30 | 7.98 | 8.61 | 14.30 | 7.98 | 8.61 | 14.86 | 8.54 | 9.17 |

### IEC B5 & B3/B5 Metric Motor Flange Face Locations

| | D63D | | D71D | | D80D | | D90D | | D100LD D112MD | | D132D | |
|---|---|---|---|---|---|---|---|---|---|---|---|---|
| UNIT | LQ | RQ | LQ | RQ | LQ | RQ | LQ | RQ | LQ | RQ | LQ | RQ |
| 213 | 2.62 | 2.45 | 2.65 | 2.47 | 2.89 | 2.71 | N/A | N/A | N/A | N/A | N/A | N/A |
| 215 | 2.62 | 2.45 | 2.65 | 2.47 | 2.89 | 2.71 | N/A | N/A | N/A | N/A | N/A | N/A |
| 218 | 2.62 | 2.45 | 2.65 | 2.47 | 2.89 | 2.71 | N/A | N/A | N/A | N/A | N/A | N/A |
| 220 | 2.62 | 2.45 | 2.65 | 2.47 | 2.89 | 2.71 | N/A | N/A | N/A | N/A | N/A | N/A |
| 224 | 2.62 | 2.45 | 2.65 | 2.47 | 2.89 | 2.71 | N/A | N/A | N/A | N/A | N/A | N/A |
| 226 | 2.62 | 2.45 | 2.65 | 2.47 | 2.89 | 2.71 | N/A | N/A | N/A | N/A | N/A | N/A |
| 230 | 3.15 | 2.98 | 3.18 | 3.00 | 3.42 | 3.24 | N/A | N/A | N/A | N/A | N/A | N/A |
| 232 | 3.15 | 2.98 | 3.18 | 3.00 | 3.42 | 3.24 | N/A | N/A | N/A | N/A | N/A | N/A |
| 242 | 3.62 | 3.43 | 3.65 | 3.44 | 3.89 | 3.68 | N/A | N/A | N/A | N/A | N/A | N/A |
| 252 | N/A | N/A | 4.28 | 4.09 | 4.90 | 4.72 | 4.90 | 4.72 | 5.30 | 5.07 | N/A | N/A |
| 2600 | N/A | N/A | 4.97 | 4.78 | 5.59 | 5.41 | 5.59 | 5.41 | 5.99 | 5.76 | N/A | N/A |
| 2700 | N/A | N/A | 4.97 | 4.78 | 5.59 | 5.41 | 5.59 | 5.41 | 5.99 | 5.76 | N/A | N/A |
| 2800 | N/A | N/A | N/A | N/A | N/A | N/A | 6.38 | 6.16 | 6.39 | 6.14 | 7.17 | 6.93 |
| 21000 | N/A | N/A | N/A | N/A | N/A | N/A | 7.78 | 7.46 | 7.78 | 7.45 | 8.57 | 8.24 |

*Note: Metric motor flanges are available in quill-style (DFHMQ) only.*

## Metric Motor Data

### IEC B5 & B3/B5 Metric Motor Mounting Dimensions

*(All dimensions given in millimeters)*

| Frame | AJ | AK | BD | OD | BE | BORE | KWY.** | BF TAP |
|---|---|---|---|---|---|---|---|---|
| D63D | 115 | 95 | 117 | 131 | 10 | 11 | 4 x 2 | M8 x 1.25 |
| D71D | 130 | 110 | 132 | 146 | 11 | 14 | 5 x 2.5 | M8 x 1.25 |
| D80D | 165 | 130 | 165 | 184 | 15 | 19 | 6 x 3 | M10 x 1.50 |
| D90D | 165 | 130 | 165 | 184 | 15 | 24 | 8 x 3.5 | M10 x 1.50 |
| D100LD* | 215 | 180 | 216 | 237 | 18 | 28 | 8 x 3.5 | M12 x 1.75 |
| D132D | 265 | 230 | 267 | 290 | 18 | 38 | 10 x 4 | M12 x 1.75 |

**also applies to D112MD*
***keyway width by depth*

# Double Reduction

## Worm / Worm Dimensions

### Style DFE

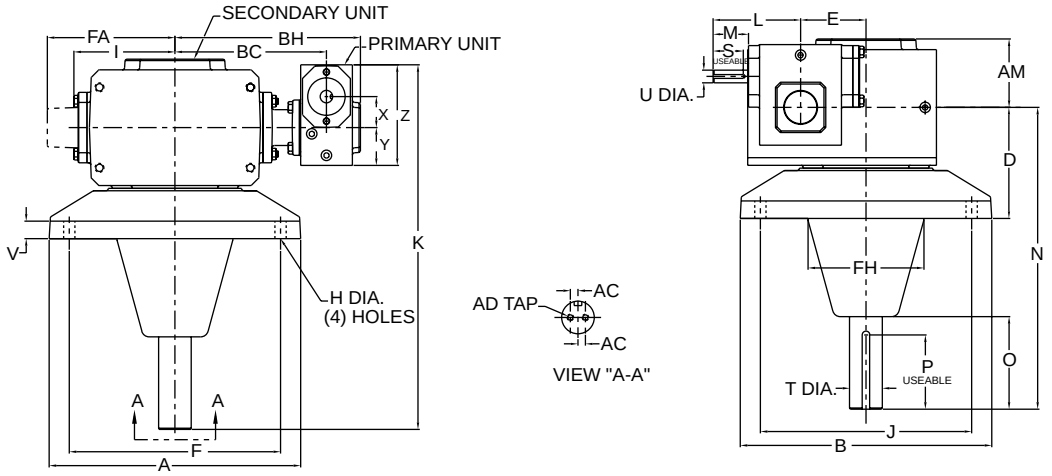


### Styles DFEM & DFEMQ

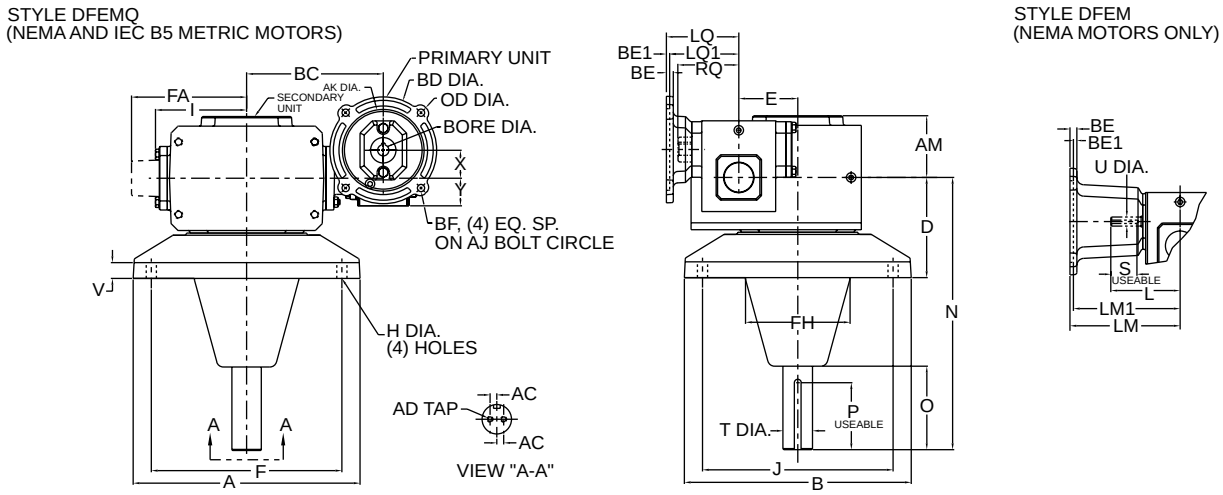


### Assemblies

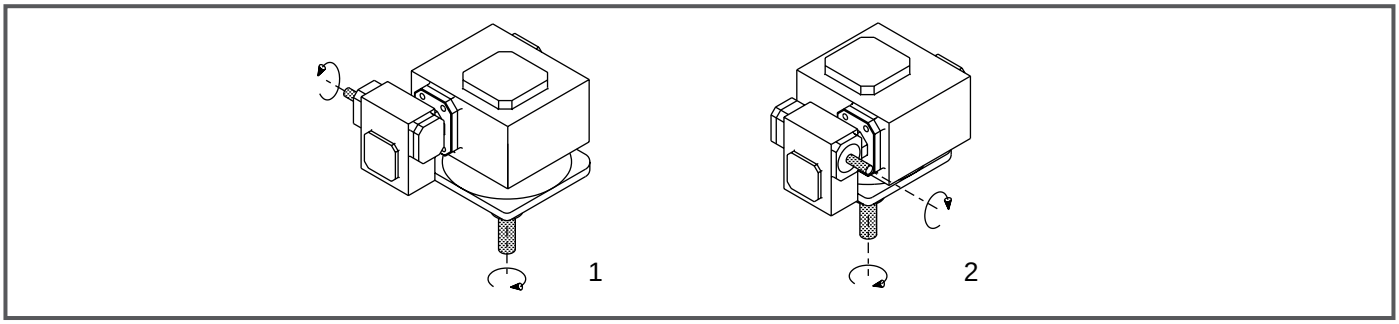


*Note: The input shaft may be rotated in either direction. Units are for mounting as shown. Contact factory for other mountings. Assembly positions also apply to motor flange units ("MQ" and "M").* ***See page 78 for additional assembly options.***

# Double Reduction

## Styles DFE, DFEMQ, DFEM

| UNIT | A | AC | AD | AM | B | BC | BH | D | E | F | FA | FH | H Dia. | I | J | K | L | M |
|---|---|---|---|---|---|---|---|---|---|---|---|---|---|---|---|---|---|---|
| 230 | 11.00 | .375 | .31-18 UNC X 1.00 DP | 3.15 | 11.00 | 7.86 | 10.06 | 4.60 | 3.000 | 9.00 | N/A | 5.12 | .56 | 4.84 | 9.00 | 17.85 | 4.35 | 1.76 |
| 232 | 12.50 | .375 | .31-18 UNC X 1.00 DP | 3.40 | 12.50 | 8.05 | 10.25 | 5.52 | 3.250 | 10.50 | N/A | 5.75 | .56 | 5.02 | 10.50 | 18.47 | 4.35 | 1.76 |
| 242 | 14.00 | .500 | .38-16 UNC X 1.00 DP | 3.62 | 14.00 | 9.18 | 11.57 | 5.74 | 4.250 | 12.00 | N/A | 6.75 | .69 | 6.10 | 12.00 | 20.59 | 4.82 | 1.76 |
| 252 | 16.00 | .750 | .38-16 UNC X 1.00 DP | 4.28 | 16.00 | 11.57 | 14.47 | 6.00 | 5.250 | 14.00 | N/A | 8.00 | .81 | 7.50 | 14.00 | 21.56 | 6.07 | 2.38 |
| 2600 | 19.50 | .750 | .38-16 UNC X 1.00 DP | 5.28 | 19.50 | 13.30 | 16.70 | 7.00 | 6.000 | 17.00 | 10.24 | 9.50 | .88 | N/A | 17.00 | 28.38 | 6.76 | 2.38 |
| 2700 | 22.00 | 1.000 | .38-16 UNC X 1.00 DP | 6.06 | 22.00 | 12.96 | 16.90 | 8.50 | 7.000 | 19.00 | 10.63 | 10.75 | 1.13 | N/A | 19.00 | 29.88 | 6.76 | 2.38 |
| 2800 | 28.00 | 1.062 | .62-11 UNC X 1.50 DP | 6.22 | 28.00 | 13.94 | 18.19 | 10.00 | 8.000 | 24.00 | 11.93 | 13.75 | 1.31 | N/A | 24.00 | 34.00 | 9.57 | 3.47 |
| 21000 | 32.00 | 1.188 | .62-11 UNC X 1.50 DP | 7.94 | 32.00 | 17.05 | 22.30 | 12.50 | 10.000 | 28.00 | 14.34 | 17.00 | 1.31 | N/A | 28.00 | 38.38 | 10.88 | 3.38 |

| UNIT | N | O | P** | S** | T Dia. | U Dia. | V | X | Y | Z |
|---|---|---|---|---|---|---|---|---|---|---|
| 230 | 14.38 | 4.96 | 3/8 X 3.88 | 3/16 x 1.50 | 1.438 | .625 | .78 | 1.540 | 1.91 | 5.38 |
| 232 | 15.00 | 4.63 | 3/8 X 3.69 | 3/16 x 1.50 | 1.625 | .625 | .88 | 1.540 | 1.91 | 5.38 |
| 242 | 16.50 | 5.91 | 3/8 X 4.68 | 3/16 x 1.50 | 1.688 | .625 | 1.00 | 2.063 | 2.28 | 6.38 |
| 252 | 16.50 | 5.62 | 1/2 X 4.63 | 3/16 x 1.75 | 2.188 | .750 | 1.25 | 2.625 | 2.94 | 8.00 |
| 2600 | 22.50 | 7.63 | 5/8 X 6.50 | 3/16 x 1.75 | 2.438 | .875 | 1.50 | 3.250 | 3.50 | 9.38 |
| 2700 | 24.00 | 7.63 | 3/4 X 6.44 | 3/16 x 1.75 | 2.937 | .875 | 1.75 | 3.250 | 3.50 | 9.38 |
| 2800 | 27.06 | 9.25 | 7/8 X 8.00 | 1/4 x 2.88 | 3.438 | 1.250 | 2.00 | 4.250 | 4.44 | 11.38 |
| 21000 | 29.50 | 9.43 | 1 X 7.75 | 1/4 x 3.00 | 3.938 | 1.250 | 2.25 | 5.250 | 5.12 | 14.00 |

**applies to double output shaft*
***keyway width by length*

## NEMA Motor Data

### NEMA Motor Mounting Dimensions

| Frame | AJ | AK | BD | OD | BE | BE1 | BORE | KWY.** | BF |
|---|---|---|---|---|---|---|---|---|---|
| 48CZ | 3.75 | 3.00 | 3.88 | 4.36 | .38 | N/A | .500 | 1/8 x 1/16 | .28 |
| 56C | 5.88 | 4.50 | 5.88 | 6.64 | .38 | N/A | .625 | 3/16 x 3/32 | .41 |
| 140TC | 5.88 | 4.50 | 5.88 | 6.64 | .38 | N/A | .875 | 3/16 x 3/32 | .41 |
| 180TC | 7.25 | 8.50 | 9.00 | N/A | N/A | .50 | 1.125 | 1/4 x 1/8 | .53 |
| 210TC | 7.25 | 8.50 | 9.00 | N/A | N/A | .50 | 1.375 | 5/16 x 5/32 | .53 |
| 250TC | 7.25 | 8.50 | 9.00 | N/A | N/A | .50 | 1.625 | 3/8 x 3/16 | .53 |

***keyway width by depth*

### NEMA Motor Flange Face Locations

| | 48CZ | | | 56C/140TC | | | 180TC | | | 210TC | | | 250TC | | |
|---|---|---|---|---|---|---|---|---|---|---|---|---|---|---|---|
| UNIT | LM | RQ | LQ | LM | RQ | LQ | LM1 | RQ | LQ1 | LM1 | RQ | LQ1 | LM1 | RQ | LQ1 |
| 230 | 6.16 | 3.62 | 3.99 | 6.60 | 3.62 | 3.99 | N/A | N/A | N/A | N/A | N/A | N/A | N/A | N/A | N/A |
| 232 | 6.16 | 3.62 | 3.99 | 6.60 | 3.62 | 3.99 | N/A | N/A | N/A | N/A | N/A | N/A | N/A | N/A | N/A |
| 242 | 6.63 | 4.06 | 4.46 | 7.07 | 4.06 | 4.46 | N/A | N/A | N/A | N/A | N/A | N/A | N/A | N/A | N/A |
| 252 | N/A | N/A | N/A | 8.32 | 4.82 | 5.19 | 9.32 | 5.13 | 5.62 | 9.32 | N/A | N/A | N/A | N/A | N/A |
| 2600 | N/A | N/A | N/A | 9.01 | 5.51 | 5.88 | 10.01 | 5.81 | 6.31 | 10.01 | 6.25 | 6.75 | N/A | N/A | N/A |
| 2700 | N/A | N/A | N/A | 9.01 | 5.51 | 5.88 | 10.01 | 5.81 | 6.31 | 10.01 | 6.25 | 6.75 | N/A | N/A | N/A |
| 2800 | N/A | N/A | N/A | 11.81 | 6.04 | 6.45 | 12.90 | 6.68 | 7.21 | 12.90 | 6.68 | 7.21 | 13.46 | 7.24 | 7.77 |
| 21000 | N/A | N/A | N/A | 13.21 | 7.35 | 7.85 | 14.30 | 7.98 | 8.61 | 14.30 | 7.98 | 8.61 | 14.86 | 8.54 | 9.17 |

*Note: All dimensions listed are for reference only. Contact factory for certified dimensions.*

WARNING *For safety, purchaser or user should provide protective guards over shaft extensions and any couplings, sheaves and belts, sprockets and chains, etc., mounted thereon.*

## Metric Motor Data

### IEC B5 & B3/B5 Metric Motor Flange Face Locations

| | D63D | | D71D | | D80D | | D90D | | D100LD D112MD | | D132D | |
|---|---|---|---|---|---|---|---|---|---|---|---|---|
| UNIT | LQ | RQ | LQ | RQ | LQ | RQ | LQ | RQ | LQ | RQ | LQ | RQ |
| 230 | 3.15 | 2.98 | 3.18 | 3.00 | 3.42 | 3.24 | N/A | N/A | N/A | N/A | N/A | N/A |
| 232 | 3.15 | 2.98 | 3.18 | 3.00 | 3.42 | 3.24 | N/A | N/A | N/A | N/A | N/A | N/A |
| 242 | 3.62 | 3.43 | 3.65 | 3.44 | 3.89 | 3.68 | N/A | N/A | N/A | N/A | N/A | N/A |
| 252 | N/A | N/A | 4.28 | 4.09 | 4.90 | 4.72 | 4.90 | 4.72 | 5.30 | 5.07 | N/A | N/A |
| 2600 | N/A | N/A | 4.97 | 4.78 | 5.59 | 5.41 | 5.59 | 5.41 | 5.99 | 5.76 | N/A | N/A |
| 2700 | N/A | N/A | 4.97 | 4.78 | 5.59 | 5.41 | 5.59 | 5.41 | 5.99 | 5.76 | N/A | N/A |
| 2800 | N/A | N/A | N/A | N/A | N/A | N/A | 6.38 | 6.16 | 6.39 | 6.14 | 7.17 | 6.93 |
| 21000 | N/A | N/A | N/A | N/A | N/A | N/A | 7.78 | 7.46 | 7.78 | 7.45 | 8.57 | 8.24 |

*Note: Metric motor flanges are available in quill-style (DFEMQ) only.*

### IEC B5 & B3/B5 Metric Motor Mounting Dimensions

*(All dimensions given in millimeters)*

| Frame | AJ | AK | BD | OD | BE | BORE | KWY.** | BF TAP |
|---|---|---|---|---|---|---|---|---|
| D63D | 115 | 95 | 117 | 131 | 10 | 11 | 4 x 2 | M8 x 1.25 |
| D71D | 130 | 110 | 132 | 146 | 11 | 14 | 5 x 2.5 | M8 x 1.25 |
| D80D | 165 | 130 | 165 | 184 | 15 | 19 | 6 x 3 | M10 x 1.50 |
| D90D | 165 | 130 | 165 | 184 | 15 | 24 | 8 x 3.5 | M10 x 1.50 |
| D100LD* | 215 | 180 | 216 | 237 | 18 | 28 | 8 x 3.5 | M12 x 1.75 |
| D132D | 265 | 230 | 267 | 290 | 18 | 38 | 10 x 4 | M12 x 1.75 |

**also applies to D112MD*
***keyway width by depth*

# Double Reduction

## Worm / Worm Assemblies

### Styles D & DT

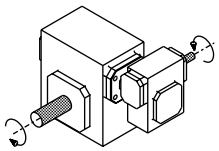
1

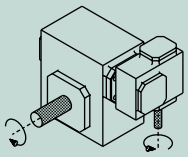
1A

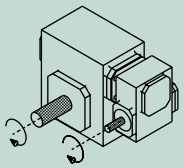
1B

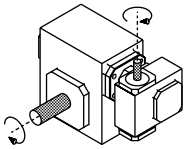
1C

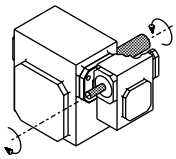
2

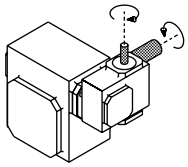
2A

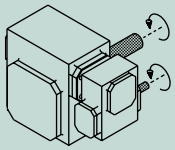
2B

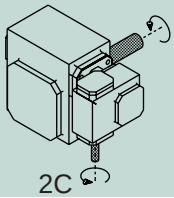
2C

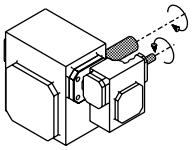
3

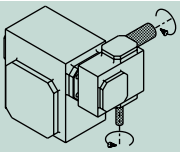
3A

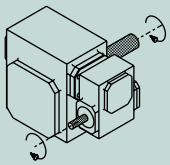
3B

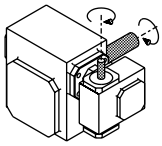
3C

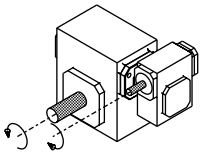
4

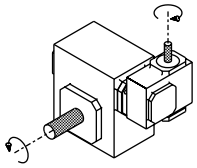
4A

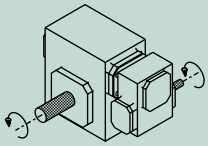
4B

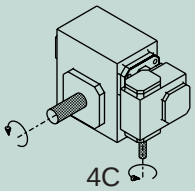
4C

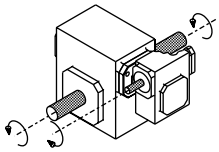
5

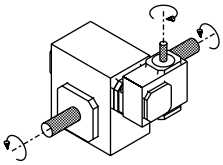
5A

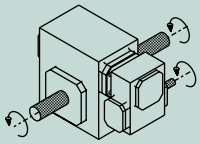
5B

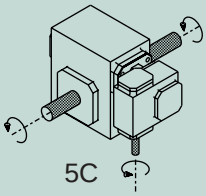
5C

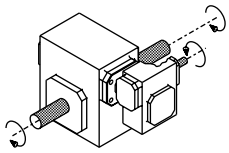
6

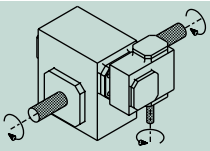
6A

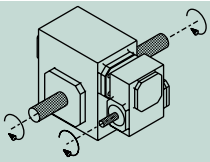
6B

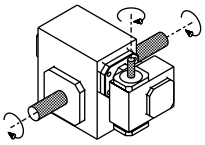
6C

### Style DH

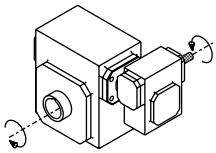
1

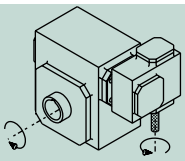
1A

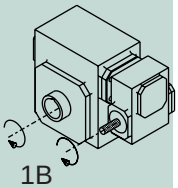
1B

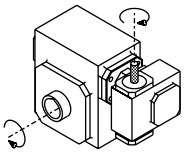
1C

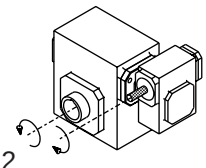
2

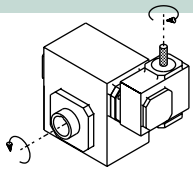
2A

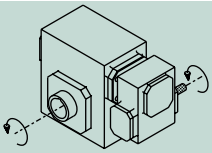
2B

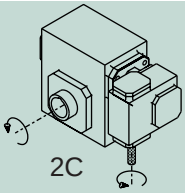
2C

# Double Reduction

## Worm / Worm Assemblies

### Style DV*(L or H)*

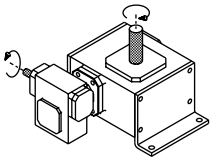
1

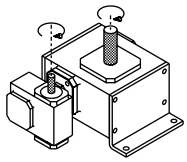
1A

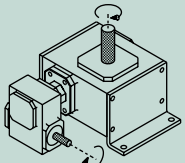
1B

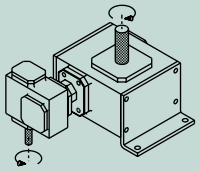
1C

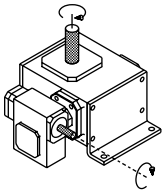
2

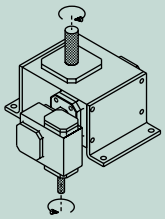
2A

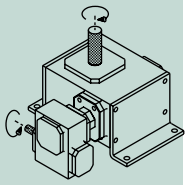
2B

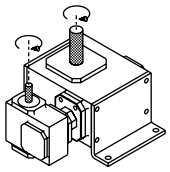
2C

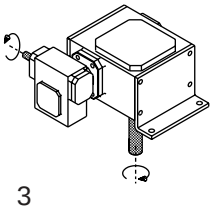
3

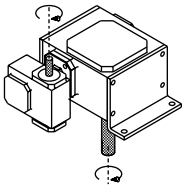
3A

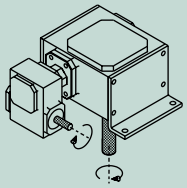
3B

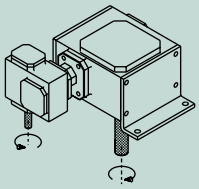
3C

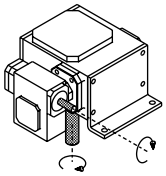
4

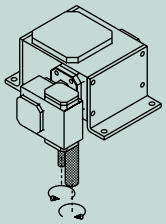
4A

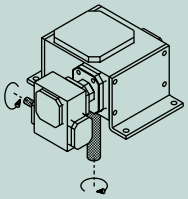
4B

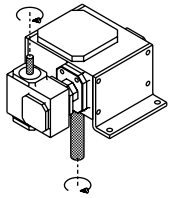
4C

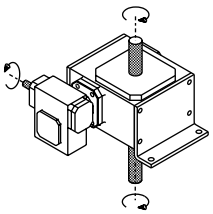
5

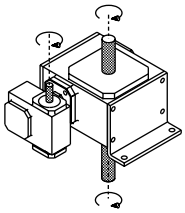
5A

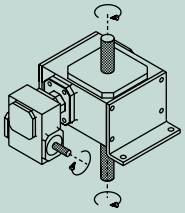
5B

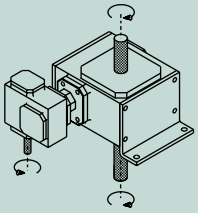
5C

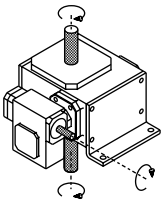
6

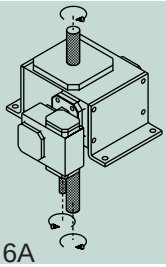
6A

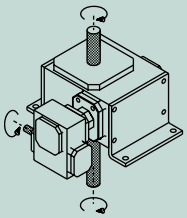
6B

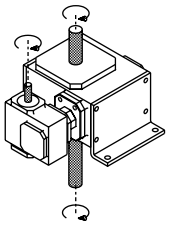
6C

***Note: The shaded mounting positions on assembly pages are not recommended due to the increased probability of leakage from high speed shaft seals.*** *Assembly position options also apply to motor flange units ("MQ" and "M"). Some assembly position options may not be available for all unit sizes. Contact factory for verification. The input shaft may be rotated in either direction. Units are for mounting as shown. Contact factory for other mountings.*

# Double Reduction

## Worm / Worm Assemblies

### Style DU

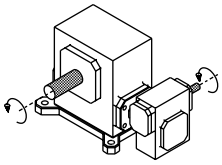
1

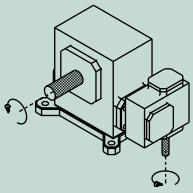
1A

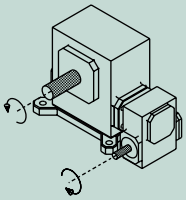
1B

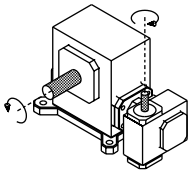
1C

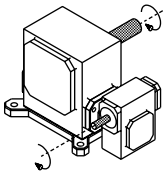
2

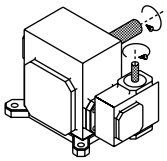
2A

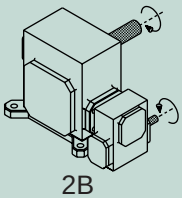
2B

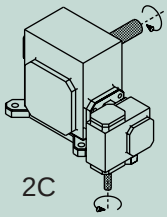
2C

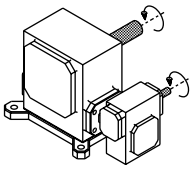
3

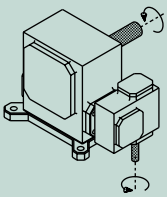
3A

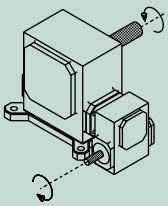
3B

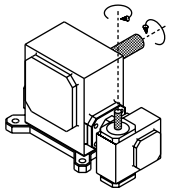
3C

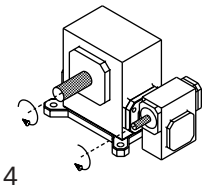
4

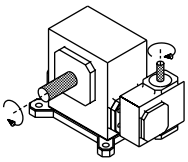
4A

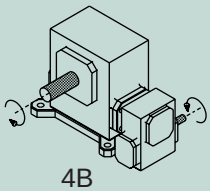
4B

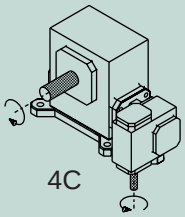
4C

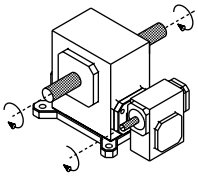
5

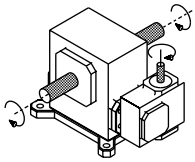
5A

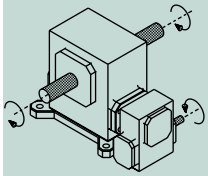
5B

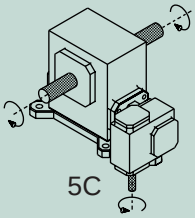
5C

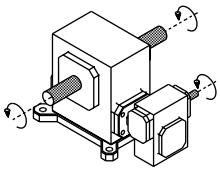
6

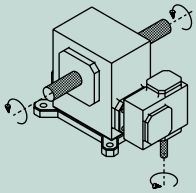
6A

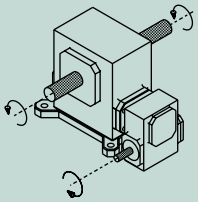
6B

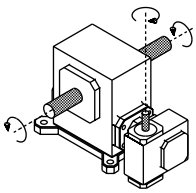
6C

# Double Reduction

## Worm / Worm Assemblies

### Style DJ

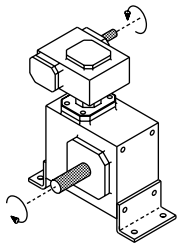
1

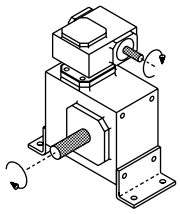
1A

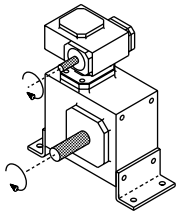
1B

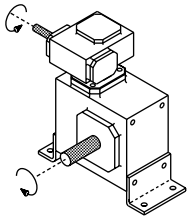
1C

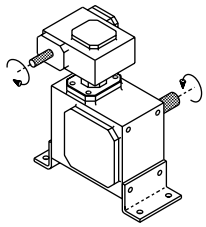
2

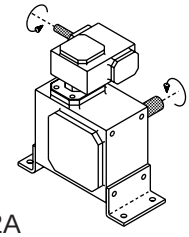
2A

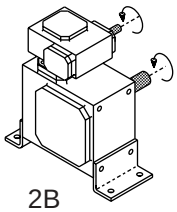
2B

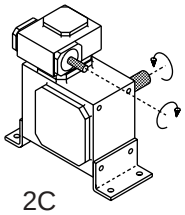
2C

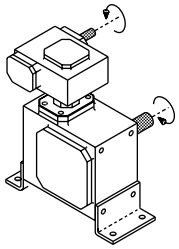
3

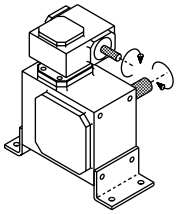
3A

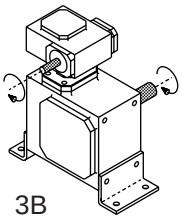
3B

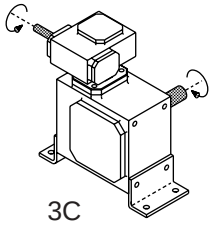
3C

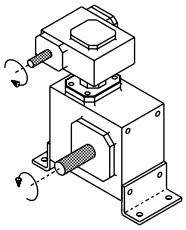
4

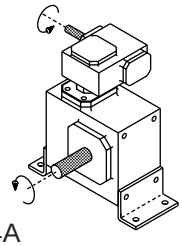
4A

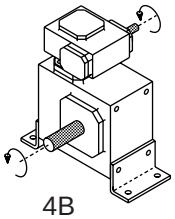
4B

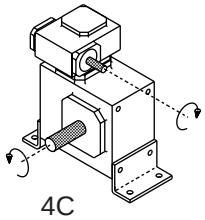
4C

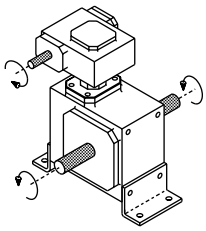
5

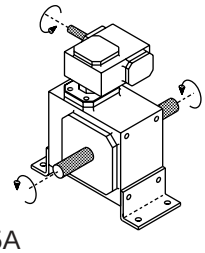
5A

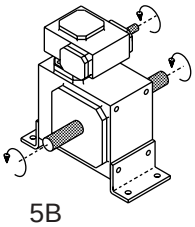
5B

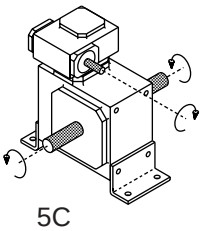
5C

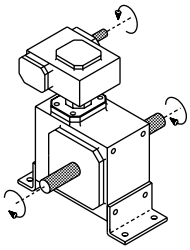
6

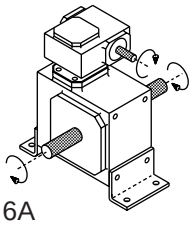
6A

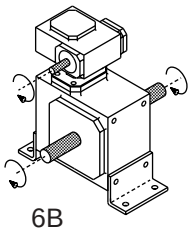
6B

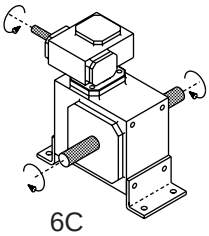
6C

***Note: The shaded mounting positions on assembly pages are not recommended due to the increased probability of leakage from high speed shaft seals.*** *Assembly position options also apply to motor flange units ("MQ" and "M"). Some assembly position options may not be available for all unit sizes. Contact factory for verification. The input shaft may be rotated in either direction. Units are for mounting as shown. Contact factory for other mountings.*

# Double Reduction

## Worm / Worm Assemblies

### Style DF

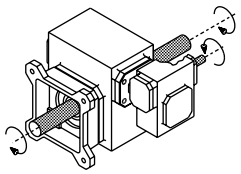
1

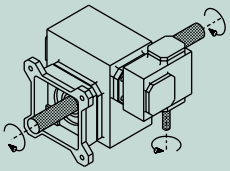
1A

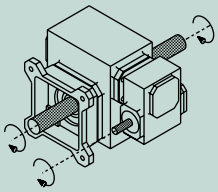
1B

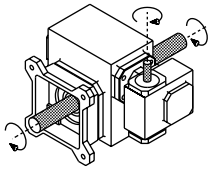
1C

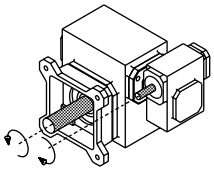
2

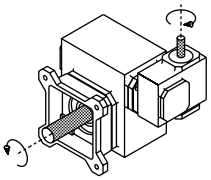
2A

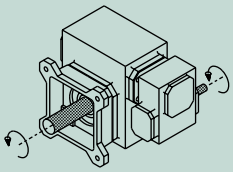
2B

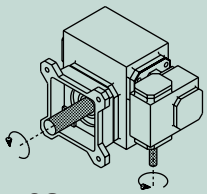
2C

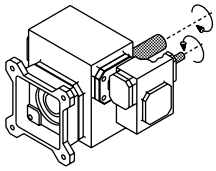
3

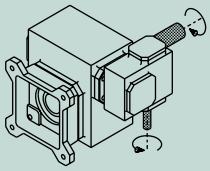
3A

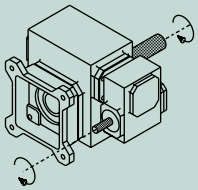
3B

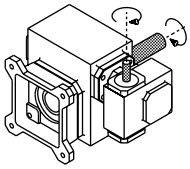
3C

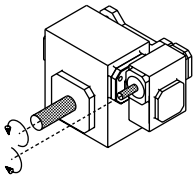
4

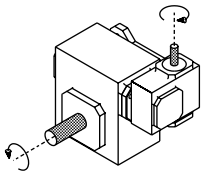
4A

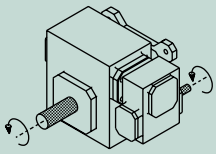
4B

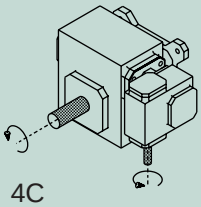
4C

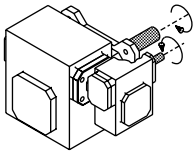
5

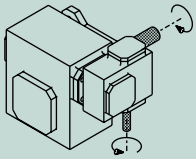
5A

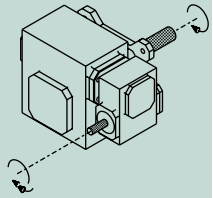
5B

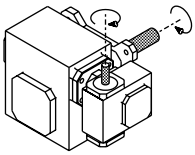
5C

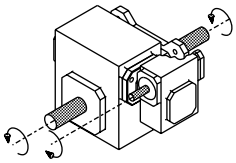
6

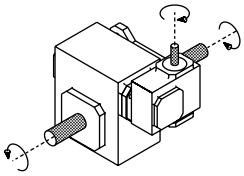
6A

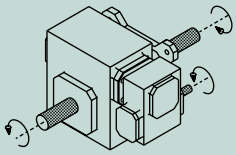
6B

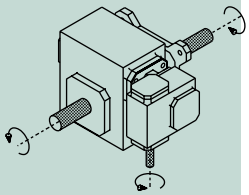
6C

# Double Reduction

## Worm / Worm Assemblies

### Style DF

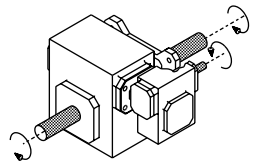
7

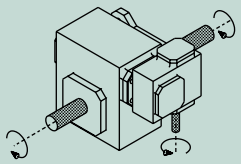
7A

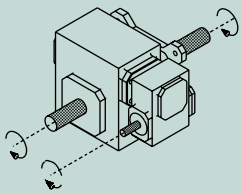
7B

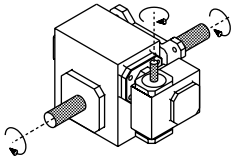
7C

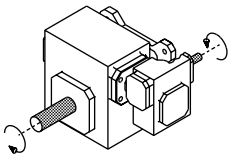
8

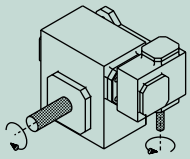
8A

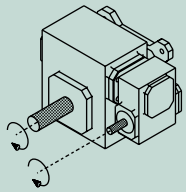
8B

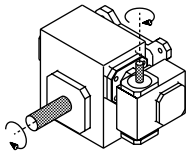
8C

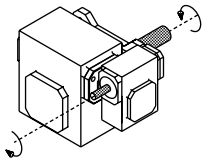
9

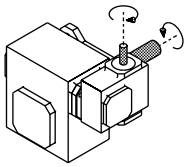
9A

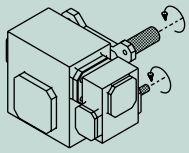
9B

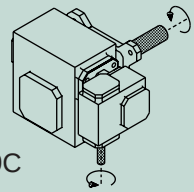
9C

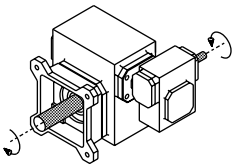
10

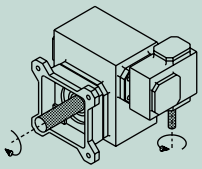
10A

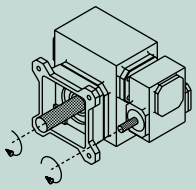
10B

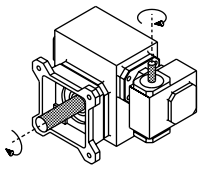
10C

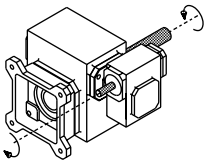
11

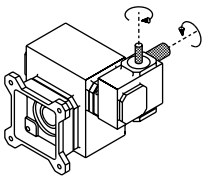
11A

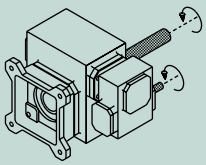
11B

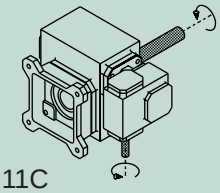
11C

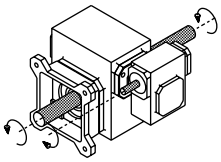
12

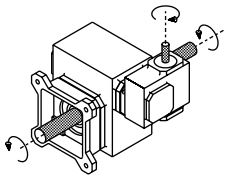
12A

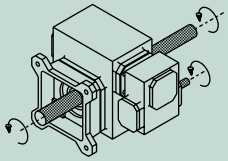
12B

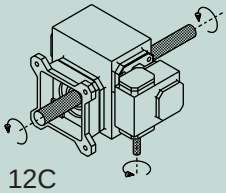
12C

***Note: The shaded mounting positions on assembly pages are not recommended due to the increased probability of leakage from high speed shaft seals.*** *Assembly position options also apply to motor flange units ("MQ" and "M"). Some assembly position options may not be available for all unit sizes. Contact factory for verification. The input shaft may be rotated in either direction. Units are for mounting as shown. Contact factory for other mountings.*

# Double Reduction

## Worm / Worm Assemblies

### Style DFE

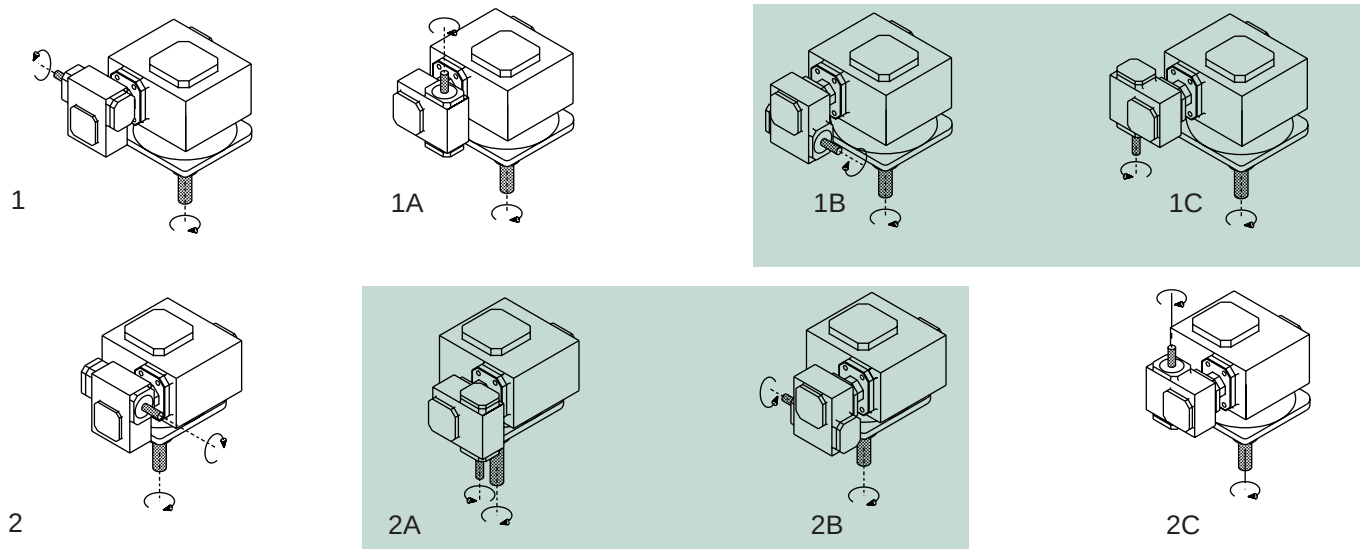


### Style DFH

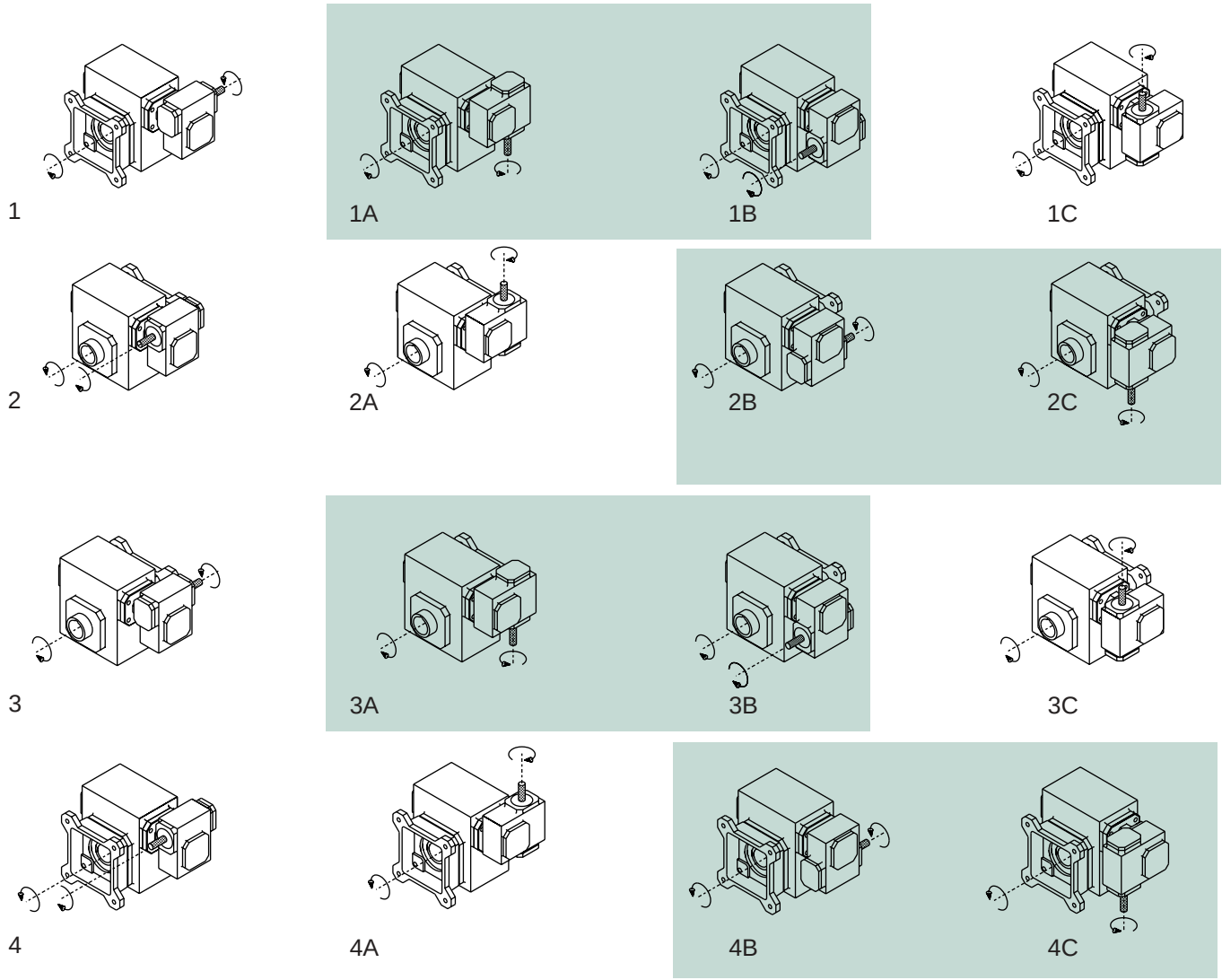


***Note: The shaded mounting positions are not recommended due to the increased probability of leakage from high speed shaft seals.*** *Assembly position options also apply to motor flange units ("MQ" and "M"). Some assembly position options may not be available for all unit sizes. Contact factory for verification. The input shaft may be rotated in either direction. Units are for mounting as shown. Contact factory for other mountings.*

# The Double Reduction Helical/Worm Flexaline Speed Reducer

New dimension and assembly drawings, quick reference charts and rating tables plus more in the Helical/Worm section...

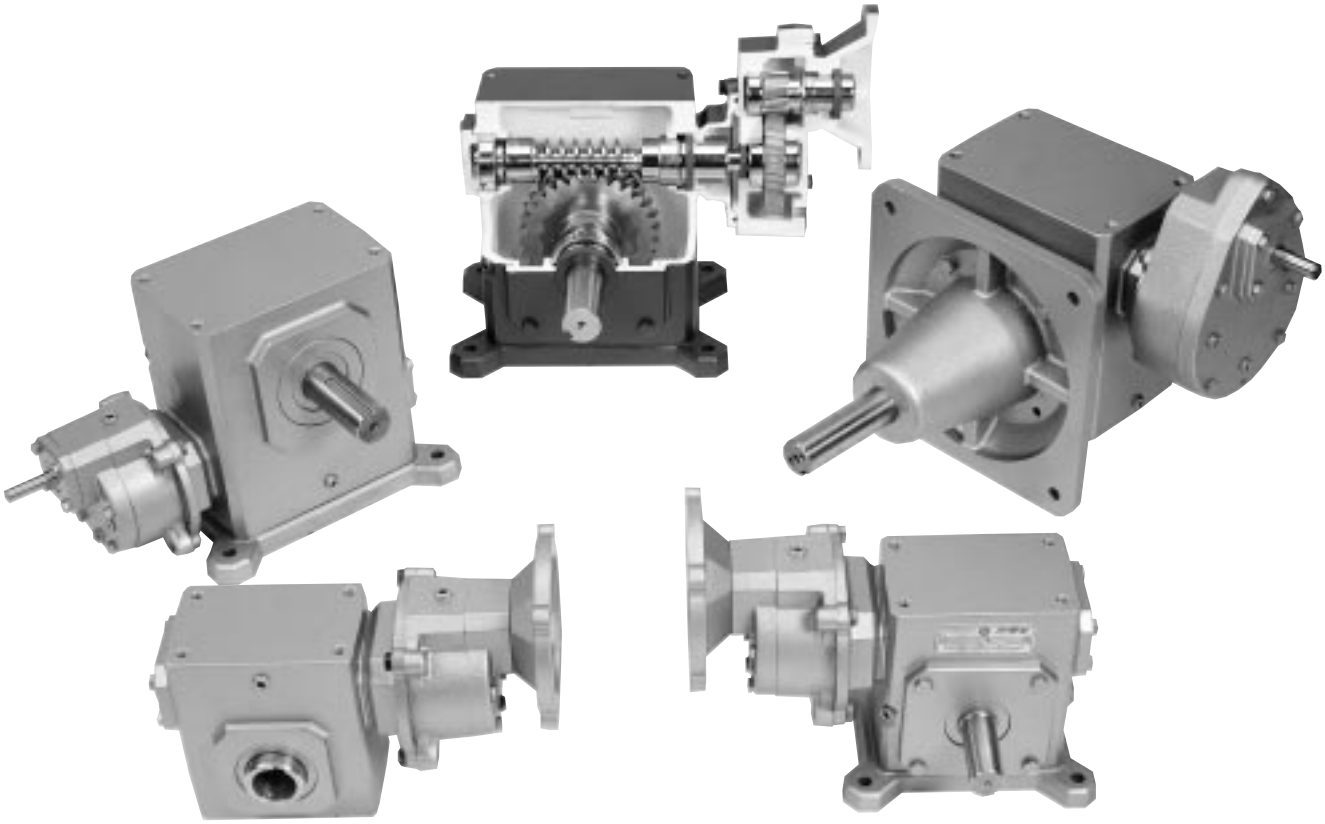

# Double Reduction
# Flexaline Speed Reducers
# Helical/Worm

| | Page |
|---|---|
| **Cutaway** | 81 |
| **Selection Guide** | 82 - 83 |
| **Quick Reference Selection Charts** | 84 |
| **Approximate Shipping Weights** | 85 |
| **Rating Tables** | |
| Sizes 213-220 | 86 |
| Sizes 224-232 | 87 |
| Sizes 242-2600 | 88 |
| Sizes 2700-21000 | 89 |
| **Hollow Shaft Bore Sizes** | 90 |
| **Dimension Sheet Index** | 91 |
| **Dimension Sheets** | 92 - 111 |
| **Assemblies** | 112 - 114 |
| **Accessories and Options** | 156 - 163 |
| **Engineering Information** | 164 |
| **Parts List** | 182 |

# Helical / Worm Reduction Product Features

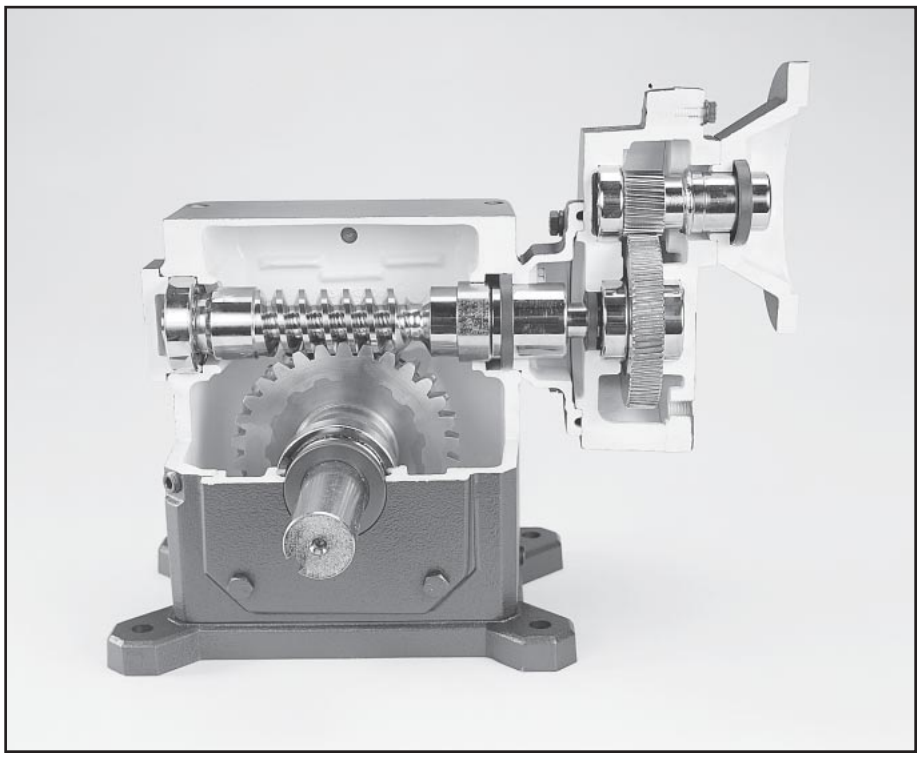

- **Rugged iron housings**, covers, and flanges provide superior strength and rigidity.
- **Separate housing design** insures long trouble free life of all components.
- **Single cover output design** ensures gear centering on the secondary box for maximum efficiency and minimum noise levels.*
- **Steel gears in the primary gear box** provide efficient, quiet, smooth running operation.
- The **worm shaft** is cut integral with the input shaft then hardened, ground, and polished to provide maximum efficiency with minimum gear noise.
- The **bronze worm gear** is chill cast from the highest quality bronze to provide superior wear and lubricity characteristics for longer life and higher efficiency.
- **Premium tapered roller bearings** on output shafts provide greater life, overhung load and thrust capacity.
- **Oversized steel output shafts** provide superior overhung load and torque characteristics.
- **Premium Chicago Rawhide Viton® double lip seals** on the secondary box provide extended life because of increased resistance to high temperatures, abrasion and chemicals.*
- **O-rings on input and output covers** of the secondary box provide positive sealing without undependable gaskets or messy silicone sealants.*
- **Non-compressible metal shims** maintain factory bearing settings and gear alignment throughout the life of the product.*
- **Large oil capacity** provides positive splash lubrication and superior cooling capability.
- **Metal nameplate drive screwed to housing** insures easy field identification for repair parts and replacement.
- **Units are oil filled at the factory** with the proper lubrication to provide simple and economical installation.**
- **All units are 100% run and leak** tested at the factory to insure that you only receive the highest quality product.

** Standard on unit sizes up to and including 5 1/4 inch center distance only. (Size 213 to 252)*
*** Seven, eight, and ten inch center distance reducers are shipped without oil. (Sizes 2700,2800, & 21000)*

# Double Reduction

## Helical / Worm Selection Guide

### Style DX

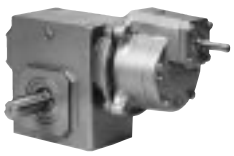

*Ratings - Pg. 86-89*
*Dimensions - Pg. 92-93*

### Style DXMQ

*Ratings - Pg. 86-89*
*Dimensions - Pg. 92-93*

### Style DXT

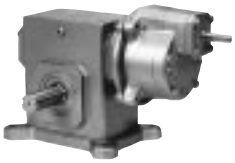

*Ratings - Pg. 86-89*
*Dimensions - Pg. 94-95*

### Style DXTMQ

*Ratings - Pg. 86-89*
*Dimensions - Pg. 94-95*

### Style DXU

*Ratings - Pg. 86-89*
*Dimensions - Pg. 96-97*

### Style DXUMQ

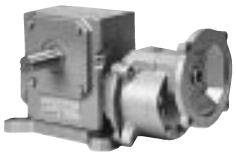

*Ratings - Pg. 86-89*
*Dimensions - Pg. 96-97*

### Style DXVL

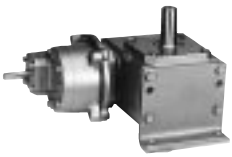

*Ratings - Pg. 86-89*
*Dimensions - Pg. 98-99*

### Style DXVLMQ

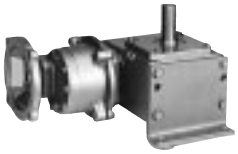

*Ratings - Pg. 86-89*
*Dimensions - Pg. 98-99*

### Style DXVH

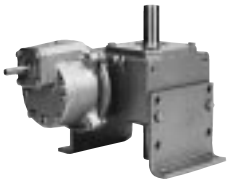

*Ratings - Pg. 86-89*
*Dimensions - Pg. 98-99*

### Style DXVHMQ

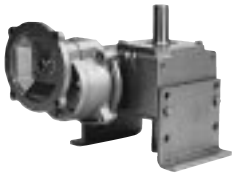

*Ratings - Pg. 86-89*
*Dimensions - Pg. 98-99*

### Style DXJ

*Ratings - Pg. 86-89*
*Dimensions - Pg. 100-101*

### Style DXJMQ

*Ratings - Pg. 86-89*
*Dimensions - Pg. 100-101*

### Style DXF

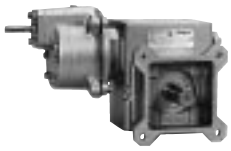

*Ratings - Pg. 86-89*
*Dimensions - Pg. 102-103*

### Style DXFMQ

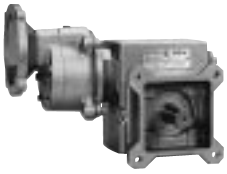

*Ratings - Pg. 86-89*
*Dimensions - Pg. 102-103*

### Style DXH

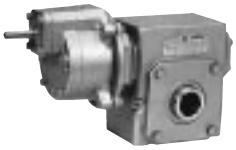

*Ratings - Pg. 87-89*
*Dimensions - Pg. 104-105*

### Style DXHMQ

*Ratings - Pg. 87-89*
*Dimensions - Pg. 104-105*

# Double Reduction

## Helical / Worm Selection Guide

### Style DXVHH

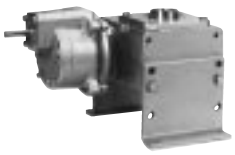

*Ratings - Pg. 86-89*
*Dimensions - Pg. 108-109*

### Style DXVHHMQ

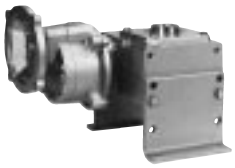

*Ratings - Pg. 86-89*
*Dimensions - Pg. 108-109*

### Style DXVLH

*Ratings - Pg. 86-89*
*Dimensions - Pg. 108-109*

### Style DXVLHMQ

*Ratings - Pg. 86-89*
*Dimensions - Pg. 108-109*

### Style DXJH

*Ratings - Pg. 86-89*
*Dimensions - Pg. **

### Style DXJHMQ

*Ratings - Pg. 86-89*
*Dimensions - Pg. **

### Style DXFH

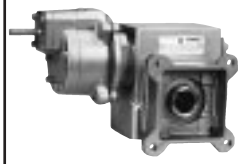

*Ratings - Pg. 86-89*
*Dimensions - Pg. 106-107*

### Style DXFHMQ

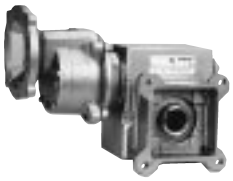

*Ratings - Pg. 86-89*
*Dimensions - Pg. 106-107*

### Style DXC

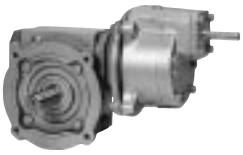

*Ratings - Pg. 86-89*
*Dimensions - Pg .**

### Style DXCMQ

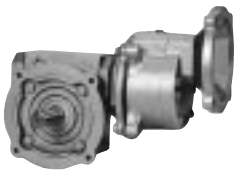

*Ratings - Pg. 86-89*
*Dimensions - Pg. **

### Style DXTH

*Ratings - Pg. 86-89*
*Dimensions - Pg. **

### Style DXTHMQ

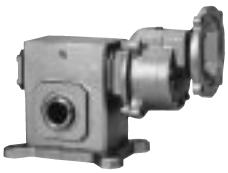

*Ratings - Pg. 86-89*
*Dimensions - Pg. **

### Style DXUH

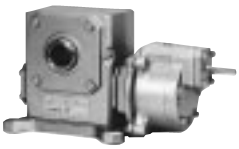

*Ratings - Pg. 86-89*
*Dimensions - Pg. **

### Style DXUHMQ

*Ratings - Pg. 86-89*
*Dimensions - Pg. **

### Style DXFE

*Ratings - Pg. 87-89*
*Dimensions - Pg. 110-111*

### Style DXFEMQ

*Ratings - Pg. 87-89*
*Dimensions - Pg. 110-111*

**Contact factory for dimension information.*

# Double Reduction

## Quick Reference Model Selection Chart Helical/Worm

### Class I *(1.0 Service Factor)*

| Reduc. Ratio | Output RPM | Input Horsepower @ 1750 RPM | | | | | | | | | | | | | | | | | |
|---|---|---|---|---|---|---|---|---|---|---|---|---|---|---|---|---|---|---|---|
| | | 1/8 | 1/6 | 1/4 | 1/3 | 1/2 | 3/4 | 1 | 1.5 | 2 | 3 | 5 | 7.5 | 10 | 15 | 20 | 25 | 30 | 40 |
| 20 | 87.5 | 213 | 213 | 213 | 213 | 215 | 218 | 220 | 224 | 224 | 230 | 232 | 242 | 252 | 252 | NA | NA | NA | NA |
| 25 | 70.0 | 213 | 213 | 213 | 213 | 215 | 220 | 224 | 226 | 230 | 242 | 242 | 252 | 252 | 2700 | 2800 | 2800 | 2800 | 21000 |
| 30 | 58.3 | 213 | 213 | 213 | 213 | 215 | 220 | 220 | 224 | 230 | 232 | 242 | 252 | 252 | NA | NA | NA | NA | NA |
| 40 | 43.8 | 213 | 213 | 213 | 215 | 218 | 220 | 224 | 226 | 230 | 232 | 242 | 252 | 252 | NA | NA | NA | NA | NA |
| 50 | 35.0 | 213 | 213 | 215 | 215 | 220 | 224 | 224 | 230 | 230 | 242 | 242 | 252 | 2600 | 2700 | 2800 | 21000 | 21000 | |
| 60 | 29.2 | 213 | 213 | 215 | 218 | 220 | 224 | 226 | 230 | 230 | 242 | 252 | 252 | NA | NA | NA | NA | NA | |
| 75 | 23.3 | 213 | 213 | 215 | 220 | 224 | 224 | 230 | 230 | 242 | 242 | 252 | 2600 | 2700 | 2800 | 21000 | 21000 | NA | |
| 80 | 21.9 | 213 | 215 | 215 | 220 | 224 | 226 | 230 | 232 | NA | NA | NA | NA | NA | NA | NA | NA | NA | |
| 100 | 17.5 | 213 | 215 | 218 | 220 | 224 | 226 | 230 | 232 | 242 | 242 | 252 | 2700 | 2800 | 21000 | 21000 | NA | | |
| 125 | 14.0 | 215 | 215 | 220 | 224 | 226 | 230 | 232 | 242 | 242 | 252 | 2600 | 2700 | 2800 | 21000 | NA | NA | | |
| 150 | 11.7 | 215 | 215 | 220 | 224 | 226 | 230 | 232 | 242 | 242 | 252 | 2600 | 2800 | 21000 | 21000 | NA | | | |
| 200 | 8.75 | 215 | 220 | 224 | 224 | 230 | 232 | 242 | 242 | 252 | 252 | 2700 | 21000 | 21000 | NA | NA | | | |
| 250 | 7.00 | 215 | 220 | 224 | 226 | 230 | 242 | 242 | 242 | 252 | 2600 | 2800 | 21000 | 21000 | NA | | | | |
| 300 | 5.83 | 220 | 220 | 224 | 230 | 230 | 242 | 242 | 252 | 252 | 2600 | 21000 | NA | NA | NA | | | | |
| 400 | 4.38 | 224 | 224 | 226 | 230 | 242 | 242 | 252 | 252 | 2600 | NA | NA | NA | NA | | | | | |
| 500 | 3.50 | 226 | 230 | 232 | 242 | 242 | 252 | 252 | 2600 | NA | NA | NA | NA | NA | | | | | |
| 600 | 2.92 | 224 | 230 | 230 | 242 | 242 | 252 | 252 | 2600 | NA | NA | NA | | | | | | | |

Not Available

*Note: This chart is meant only as a guide. For actual ratings see pages 86-89.*

### Class II *(1.25 Service Factor)*

| Reduc. Ratio | Output RPM | Input Horsepower @ 1750 RPM | | | | | | | | | | | | | | | | |
|---|---|---|---|---|---|---|---|---|---|---|---|---|---|---|---|---|---|---|
| | | 1/8 | 1/6 | 1/4 | 1/3 | 1/2 | 3/4 | 1 | 1.5 | 2 | 3 | 5 | 7.5 | 10 | 15 | 20 | 25 | 30 |
| 20 | 87.5 | 213 | 213 | 213 | 213 | 215 | 220 | 220 | 224 | 226 | 230 | 242 | 242 | 252 | NA | NA | NA | NA |
| 25 | 70.0 | 213 | 213 | 213 | 215 | 220 | 224 | 224 | 230 | 230 | 242 | 242 | 252 | 2700 | 2700 | 2800 | 2800 | 21000 |
| 30 | 58.3 | 213 | 213 | 213 | 215 | 218 | 220 | 224 | 226 | 230 | 232 | 242 | 252 | 2600 | NA | NA | NA | NA |
| 40 | 43.8 | 213 | 213 | 215 | 215 | 220 | 224 | 226 | 230 | 232 | 242 | 252 | 252 | NA | NA | NA | NA | NA |
| 50 | 35.0 | 213 | 213 | 215 | 218 | 220 | 224 | 226 | 230 | 232 | 242 | 252 | 2600 | 2700 | 2800 | 21000 | 21000 | 21000 |
| 60 | 29.2 | 213 | 215 | 215 | 220 | 224 | 226 | 230 | 230 | 242 | 242 | 252 | 2600 | NA | NA | NA | NA | |
| 75 | 23.3 | 213 | 215 | 218 | 220 | 224 | 226 | 230 | 232 | 242 | 242 | 252 | 2700 | 2800 | 21000 | 21000 | NA | |
| 80 | 21.9 | 215 | 215 | 220 | 220 | 224 | 230 | 230 | 232 | NA | NA | NA | NA | NA | NA | NA | NA | |
| 100 | 17.5 | 215 | 215 | 220 | 224 | 226 | 230 | 232 | 242 | 242 | 252 | 2600 | 2800 | 2800 | 21000 | NA | | |
| 125 | 14.0 | 215 | 220 | 224 | 224 | 230 | 230 | 242 | 242 | 242 | 252 | 2700 | 2800 | 21000 | 21000 | NA | | |
| 150 | 11.7 | 215 | 220 | 224 | 224 | 230 | 232 | 242 | 242 | 252 | 252 | 2700 | 21000 | 21000 | NA | | | |
| 200 | 8.75 | 215 | 220 | 224 | 226 | 230 | 242 | 242 | 242 | 252 | 2600 | 2800 | 21000 | 21000 | NA | | | |
| 250 | 7.00 | 220 | 224 | 226 | 230 | 232 | 242 | 242 | 252 | 252 | 2700 | 21000 | 21000 | NA | NA | | | |
| 300 | 5.83 | 220 | 224 | 230 | 230 | 242 | 242 | 242 | 252 | 252 | 2800 | 21000 | NA | NA | | | | |
| 400 | 4.38 | 224 | 226 | 230 | 232 | 242 | 252 | 252 | 2600 | NA | NA | NA | NA | | | | | |
| 500 | 3.50 | 230 | 230 | 242 | 242 | 252 | 252 | 2600 | NA | NA | NA | NA | NA | | | | | |
| 600 | 2.92 | 230 | 230 | 242 | 242 | 252 | 252 | 252 | NA | NA | NA | NA | | | | | | |

Not Available

*Note: This chart is meant only as a guide. For actual ratings see pages 86-89.*

**For Class III** *(2.00 Service Factor)* **contact factory.**

# Helical / Worm Approximate Shipping Weights (LBS.)

| Style | 213 | 215 | 218 | 220 | 224 | 226 | 230 | 232 | 242 | 252 | 2600 | 2700 | 2800 | 21000 |
|---|---|---|---|---|---|---|---|---|---|---|---|---|---|---|
| DX | 35 | 40 | 42 | 48 | 69 | 82 | 103 | 106 | 180 | 281 | 378 | 510 | 770 | 1250 |
| DXMQ | 37 | 42 | 44 | 50 | 71 | 84 | 105 | 108 | 184 | 285 | 382 | - | - | - |
| DXT | 37 | 42 | 44 | 51 | 77 | 92 | 119 | 122 | 190 | 303 | 398 | 551 | 818 | 1326 |
| DXTMQ | 41 | 44 | 46 | 53 | 79 | 94 | 121 | 124 | 194 | 307 | 402 | - | - | - |
| DXU | 37 | 42 | 44 | 51 | 77 | 92 | 119 | 122 | 190 | 303 | 398 | 551 | 818 | 1326 |
| DXUMQ | 41 | 44 | 46 | 53 | 79 | 94 | 121 | 124 | 194 | 307 | 402 | - | - | - |
| DXVL & DXVH | 38 | 44 | 45 | 66 | 77 | 93 | 117 | 120 | 208 | 316 | 405 | 581 | 848 | 1403 |
| DXVLMQ & DXVHMQ | 40 | 46 | 47 | 68 | 79 | 95 | 119 | 122 | 212 | 320 | 409 | - | - | - |
| DXJ | 36 | 42 | 44 | 51 | 72 | 86 | 109 | 112 | 191 | 299 | 390 | - | - | - |
| DXJMQ | 38 | 44 | 46 | 53 | 74 | 88 | 111 | 114 | 195 | 303 | 394 | - | - | - |
| DXH | 35 | 40 | 43 | 51 | 70 | 80 | 103 | 106 | 180 | 281 | 378 | 510 | 770 | 1250 |
| DXHMQ | 37 | 42 | 45 | 53 | 72 | 82 | 105 | 108 | 184 | 285 | 382 | - | - | - |
| DXF | 37 | 42 | 44 | 52 | 79 | 92 | 119 | 122 | 186 | 299 | 390 | - | - | - |
| DXFMQ | 39 | 44 | 46 | 54 | 81 | 94 | 121 | 124 | 190 | 303 | 394 | - | - | - |
| DXFE | - | - | - | - | - | - | 115 | 126 | 210 | 302 | 410 | - | - | - |
| DXFEMQ | - | - | - | - | - | - | 115 | 128 | 214 | 306 | 414 | - | - | - |

## Flexaline Accessories
## Approximate Shipping Weights (LBS.)
## *Double Reduction Helical/Worm Design*

| ACCESSORY | 213 | 215 | 218 | 220 | 224 | 226 | 230 | 232 | 242 | 252 | 2600 | 2700 | 2800 | 21000 |
|---|---|---|---|---|---|---|---|---|---|---|---|---|---|---|
| Horizontal Base | 3 | 3 | 3 | 3 | 8 | 10 | 16 | 16 | 18 | 22 | 31 | 41 | 48 | 76 |
| Vertical Base | 4 | 4 | 4 | 8 | 8 | 11 | 14 | 14 | 28 | 36 | 36 | 71 | 78 | 156 |
| "J" Mount Base | 1 | 2 | 2 | 3 | 3 | 4 | 6 | 6 | 11 | 18 | - | - | - | - |

# Double Reduction

## Helical / Worm Rating Table

| Ratio | Input RPM | Output RPM | Size 213 Input HP | Size 213 Output HP | Size 213 Output TQ | Size 213 OHL | Size 215 Input HP | Size 215 Output HP | Size 215 Output TQ | Size 215 OHL | Size 218 Input HP | Size 218 Output HP | Size 218 Output TQ | Size 218 OHL | Size 220 Input HP | Size 220 Output HP | Size 220 Output TQ | Size 220 OHL |
|---|---|---|---|---|---|---|---|---|---|---|---|---|---|---|---|---|---|---|
| 25:1 | 1750 | 70.0 | .323 | .268 | 241 | 700 | .548 | .454 | 409 | 860 | .579 | .490 | 441 | 790 | .907 | .751 | 699 | 1000 |
| | | | Actual Ratio - 25.56 | | | | Actual Ratio - 25.56 | | | | Actual Ratio - 25.56 | | | | Actual Ratio - 25.56 | | | |
| | | | P - 5.111 | | S - 5.0 | | P - 5.111 | | S - 5.0 | | P - 5.111 | | S - 5.0 | | P - 5.111 | | S - 5.0 | |
| 30 | 1750 | 58.3 | .351 | .268 | 290 | 700 | .546 | .400 | 432 | 860 | .669 | .535 | 578 | 790 | 1.00 | .843 | 911 | 1065 |
| | | | Actual Ratio - 30.83 | | | | Actual Ratio - 30.83 | | | | Actual Ratio - 30.83 | | | | Actual Ratio - 29.29 | | | |
| | | | P - 2.056 | | S - 15.0 | | P - 2.056 | | S - 15.0 | | P - 2.056 | | S - 15.0 | | P - 2.929 | | S - 10.0 | |
| 40 | 1750 | 43.8 | .263 | .206 | 297 | 700 | .426 | .321 | 462 | 860 | .492 | .405 | 584 | 790 | .786 | .655 | 944 | 1065 |
| | | | Actual Ratio - 40.00 | | | | Actual Ratio - 40.00 | | | | Actual Ratio - 40.00 | | | | Actual Ratio - 40.00 | | | |
| | | | P - 4.000 | | S - 10.0 | | P - 4.000 | | S - 10.0 | | P - 4.000 | | S - 10.0 | | P - 4.000 | | S - 10.0 | |
| 45 | 1750 | 38.9 | .257 | .189 | 307 | 700 | .415 | .291 | 471 | 860 | .492 | .381 | 618 | 790 | .749 | .600 | 973 | 1125 |
| | | | Actual Ratio - 43.93 | | | | Actual Ratio - 43.93 | | | | Actual Ratio - 43.93 | | | | Actual Ratio - 43.93 | | | |
| | | | P - 2.929 | | S - 15.0 | | P - 2.929 | | S - 15.0 | | P - 2.929 | | S - 15.0 | | P - 2.929 | | S - 15.0 | |
| 50 | 1750 | 35.0 | .216 | .168 | 302 | 700 | .353 | .263 | 474 | 860 | .403 | .330 | 595 | 790 | .646 | .536 | 965 | 1065 |
| | | | Actual Ratio - 51.11 | | | | Actual Ratio - 51.11 | | | | Actual Ratio - 51.11 | | | | Actual Ratio - 51.11 | | | |
| | | | P - 5.111 | | S - 10.0 | | P - 5.111 | | S - 10.0 | | P - 5.111 | | S - 10.0 | | P - 5.111 | | S - 10.0 | |
| 60 | 1750 | 29.2 | .202 | .146 | 316 | 700 | .333 | .227 | 491 | 860 | .388 | .295 | 638 | 790 | .590 | .466 | 1007 | 1125 |
| | | | Actual Ratio - 60.00 | | | | Actual Ratio - 60.00 | | | | Actual Ratio - 60.00 | | | | Actual Ratio - 60.00 | | | |
| | | | P - 4.000 | | S - 15.0 | | P - 4.000 | | S - 15.0 | | P - 4.000 | | S - 15.0 | | P - 4.000 | | S - 15.0 | |
| 75 | 1750 | 23.3 | .166 | .119 | 321 | 700 | .277 | .187 | 504 | 860 | .319 | .241 | 651 | 790 | .485 | .381 | 1028 | 1125 |
| | | | Actual Ratio - 76.67 | | | | Actual Ratio - 76.67 | | | | Actual Ratio - 76.67 | | | | Actual Ratio - 76.67 | | | |
| | | | P - 5.111 | | S - 15.0 | | P - 5.111 | | S - 15.0 | | P - 5.111 | | S - 15.0 | | P - 5.111 | | S - 15.0 | |
| 80 | 1750 | 21.9 | .160 | .109 | 315 | 700 | .277 | .175 | 505 | 860 | .300 | .220 | 634 | 790 | .476 | .356 | 1026 | 1175 |
| | | | Actual Ratio - 80.00 | | | | Actual Ratio - 80.00 | | | | Actual Ratio - 80.00 | | | | Actual Ratio - 80.00 | | | |
| | | | P - 4.000 | | S - 20.0 | | P - 4.000 | | S - 20.0 | | P - 4.000 | | S - 20.0 | | P - 4.000 | | S - 20.0 | |
| 100 | 1750 | 17.5 | .143 | .090 | 323 | 700 | .232 | .144 | 518 | 860 | .246 | .179 | 646 | 790 | .393 | .291 | 1047 | 1210 |
| | | | Actual Ratio - 100.00 | | | | Actual Ratio - 100.00 | | | | Actual Ratio - 100.00 | | | | Actual Ratio - 100.00 | | | |
| | | | P - 4.000 | | S - 25.0 | | P - 4.000 | | S - 25.0 | | P - 4.000 | | S - 25.0 | | P - 4.000 | | S - 25.0 | |
| 125 | 1750 | 14.0 | .119 | .073 | 329 | 700 | .200 | .115 | 519 | 860 | .200 | .140 | 629 | 790 | .311 | .223 | 1004 | 1210 |
| | | | Actual Ratio - 127.78 | | | | Actual Ratio - 127.78 | | | | Actual Ratio - 127.78 | | | | Actual Ratio - 127.78 | | | |
| | | | P - 5.111 | | S - 25.0 | | P - 5.111 | | S - 25.0 | | P - 5.111 | | S - 25.0 | | P - 5.111 | | S - 25.0 | |
| 150 | 1750 | 11.7 | .106 | .061 | 329 | 700 | .185 | .096 | 516 | 860 | .198 | .124 | 667 | 790 | .293 | .195 | 1053 | 1255 |
| | | | Actual Ratio - 153.33 | | | | Actual Ratio - 153.33 | | | | Actual Ratio - 153.33 | | | | Actual Ratio - 153.33 | | | |
| | | | P - 5.111 | | S - 30.0 | | P - 5.111 | | S - 30.0 | | P - 5.111 | | S - 30.0 | | P - 5.111 | | S - 30.0 | |
| 200 | 1750 | 8.75 | .084 | .044 | 318 | 700 | .156 | .071 | 514 | 860 | .151 | .089 | 641 | 790 | .240 | .145 | 1041 | 1315 |
| | | | Actual Ratio - 204.44 | | | | Actual Ratio - 204.44 | | | | Actual Ratio - 204.44 | | | | Actual Ratio - 204.44 | | | |
| | | | P - 5.111 | | S - 40.0 | | P - 5.111 | | S - 40.0 | | P - 5.111 | | S - 40.0 | | P - 5.111 | | S - 40.0 | |
| 250 | 1750 | 7.00 | .068 | .033 | 299 | 700 | .134 | .055 | 498 | 860 | .122 | .067 | 603 | 790 | .188 | .107 | 964 | 1385 |
| | | | Actual Ratio - 255.56 | | | | Actual Ratio - 255.56 | | | | Actual Ratio - 255.56 | | | | Actual Ratio - 255.56 | | | |
| | | | P - 5.111 | | S - 50.0 | | P - 5.111 | | S - 50.0 | | P - 5.111 | | S - 50.0 | | P - 5.111 | | S - 50.0 | |
| 300 | 1750 | 5.83 | .060 | .030 | 324 | 700 | .115 | .049 | 531 | 860 | .108 | .061 | 656 | 790 | .172 | .100 | 1069 | 1315 |
| | | | Actual Ratio - 298.46 | | | | Actual Ratio - 298.46 | | | | Actual Ratio - 298.46 | | | | Actual Ratio - 298.46 | | | |
| | | | P - 7.462 | | S - 40.0 | | P - 7.462 | | S - 40.0 | | P - 7.462 | | S - 40.0 | | P - 7.462 | | S - 40.0 | |
| 400 | 1750 | 4.23 | .040 | .015 | 228 | 700 | .086 | .027 | 392 | 860 | .068 | .031 | 451 | 790 | .100 | .048 | 710 | 1495 |
| | | | Actual Ratio - 413.33 | | | | Actual Ratio - 413.33 | | | | Actual Ratio - 413.33 | | | | Actual Ratio - 413.33 | | | |
| | | | P - 5.167 | | S - 80.0 | | P - 5.167 | | S - 80.0 | | P - 5.167 | | S - 80.0 | | P - 5.167 | | S - 80.0 | |
| 500 | 1750 | 3.39 | .030 | .010 | 180 | 700 | .063 | .017 | 308 | 860 | .046 | .019 | 348 | 790 | .081 | .032 | 590 | 1500 |
| | | | Actual Ratio - 516.67 | | | | Actual Ratio - 516.67 | | | | Actual Ratio - 516.67 | | | | Actual Ratio - 516.67 | | | |
| | | | P - 5.167 | | S - 100.0 | | P - 5.167 | | S - 100.0 | | P - 5.167 | | S - 100.0 | | P - 5.167 | | S - 100.0 | |
| 600 | 1750 | 2.93 | .029 | .011 | 232 | 700 | .065 | .019 | 403 | 860 | .049 | .021 | 459 | 790 | .073 | .034 | 724 | 1495 |
| | | | Actual Ratio - 596.92 | | | | Actual Ratio - 596.92 | | | | Actual Ratio - 596.92 | | | | Actual Ratio - 596.92 | | | |
| | | | P - 7.462 | | S - 80.0 | | P - 7.462 | | S - 80.0 | | P - 7.462 | | S - 80.0 | | P - 7.462 | | S - 80.0 | |

*Note: All torque values listed in inch-pounds, all overhung load values listed in pounds. The point of application of the overhung load is considered to be one shaft diameter measured outward from the gear case housing. See page 90 for extended bearing (Styles DXFE & DXFEMQ) and input shaft overhung load (OHL) capacity. At speeds above 1750 RPM, units may become thermally limited. For extended operation, limit input HP to 1750 RPM catalog rating.*

# Double Reduction

## Helical / Worm Rating Table

| Ratio | Input RPM | Output RPM | Size 224 Input HP | Size 224 Output HP | Size 224 Output TQ | Size 224 OHL | Size 226 Input HP | Size 226 Output HP | Size 226 Output TQ | Size 226 OHL | Size 230 Input HP | Size 230 Output HP | Size 230 Output TQ | Size 230 OHL | Size 232 Input HP | Size 232 Output HP | Size 232 Output TQ | Size 232 OHL |
|---|---|---|---|---|---|---|---|---|---|---|---|---|---|---|---|---|---|---|
| 25:1 | 1750 | 70.0 | 1.49 | 1.29 | 1160 | 1770 | 1.86 | 1.66 | 1495 | 1039 | 2.75 | 2.40 | 2157 | 1518 | 3.83 | 3.35 | 3117 | 2275 |
| | | | Actual Ratio - 25.00 | | | | Actual Ratio - 25.83 | | | | Actual Ratio - 25.00 | | | | Actual Ratio - 25.83 | | | |
| | | | P - 5.000 | | S - 5.0 | | P - 5.000 | | S - 5.167 | | P - 5.000 | | S - 5.000 | | P - 5.000 | | S - 5.167 | |
| 30 | 1750 | 58.3 | 1.52 | 1.32 | 1427 | 1770 | 1.99 | 1.74 | 1876 | 1039 | 2.93 | 2.56 | 2771 | 1518 | 3.85 | 3.41 | 3680 | 2275 |
| | | | Actual Ratio - 29.13 | | | | Actual Ratio - 29.13 | | | | Actual Ratio - 29.13 | | | | Actual Ratio - 29.13 | | | |
| | | | P - 2.913 | | S - 10.0 | | P - 2.913 | | S - 10.0 | | P - 2.913 | | S - 10.0 | | P - 2.913 | | S - 10.0 | |
| 40 | 1750 | 43.8 | 1.23 | 1.03 | 1490 | 1770 | 1.61 | 1.36 | 1966 | 1039 | 2.39 | 2.03 | 2924 | 1518 | 3.14 | 2.70 | 3894 | 2275 |
| | | | Actual Ratio - 40.00 | | | | Actual Ratio - 40.00 | | | | Actual Ratio - 40.00 | | | | Actual Ratio - 40.00 | | | |
| | | | P - 4.000 | | S - 10.0 | | P - 4.000 | | S - 10.0 | | P - 4.000 | | S - 10.0 | | P - 4.000 | | S - 10.0 | |
| 45 | 1750 | 38.9 | 1.14 | .941 | 1525 | 1770 | 1.40 | 1.19 | 1925 | 1039 | 2.23 | 1.87 | 3026 | 1518 | 2.97 | 2.50 | 4044 | 2275 |
| | | | Actual Ratio - 43.70 | | | | Actual Ratio - 43.70 | | | | Actual Ratio - 43.70 | | | | Actual Ratio - 43.70 | | | |
| | | | P - 2.913 | | S - 15.0 | | P - 2.913 | | S - 15.0 | | P - 2.913 | | S - 15.0 | | P - 2.913 | | S - 15.0 | |
| 50 | 1750 | 35.0 | 1.02 | .849 | 1529 | 1770 | 1.34 | 1.12 | 2023 | 1625 | 2.00 | 1.68 | 3020 | 2170 | 2.64 | 2.24 | 4028 | 2275 |
| | | | Actual Ratio - 50.00 | | | | Actual Ratio - 50.00 | | | | Actual Ratio - 50.00 | | | | Actual Ratio - 50.00 | | | |
| | | | P - 5.000 | | S - 10.0 | | P - 5.000 | | S - 10.0 | | P - 5.000 | | S - 10.0 | | P - 5.000 | | S - 10.0 | |
| 60 | 1750 | 29.2 | .922 | .735 | 1589 | 1770 | 1.18 | .948 | 2048 | 1625 | 1.82 | 1.47 | 3181 | 2170 | 2.44 | 1.98 | 4284 | 2275 |
| | | | Actual Ratio - 60.00 | | | | Actual Ratio - 58.26 | | | | Actual Ratio - 60.00 | | | | Actual Ratio - 60.00 | | | |
| | | | P - 4.000 | | S - 15.0 | | P - 2.913 | | S - 20.0 | | P - 4.000 | | S - 15.0 | | P - 4.000 | | S - 15.0 | |
| 75 | 1750 | 23.3 | .769 | .603 | 1629 | 1770 | .936 | .758 | 2047 | 1625 | 1.52 | 1.21 | 3279 | 2170 | 2.06 | 1.64 | 4434 | 2275 |
| | | | Actual Ratio - 75.00 | | | | Actual Ratio - 75.00 | | | | Actual Ratio - 75.00 | | | | Actual Ratio - 75.00 | | | |
| | | | P - 5.000 | | S - 15.0 | | P - 5.000 | | S - 15.0 | | P - 5.000 | | S - 15.0 | | P - 5.000 | | S - 15.0 | |
| 80 | 1750 | 21.9 | .738 | .559 | 1611 | 1770 | .954 | .740 | 2133 | 1625 | 1.43 | 1.10 | 3186 | 2170 | 1.89 | 1.47 | 4247 | 2275 |
| | | | Actual Ratio - 80.00 | | | | Actual Ratio - 80.00 | | | | Actual Ratio - 80.00 | | | | Actual Ratio - 80.00 | | | |
| | | | P - 4.000 | | S - 20.0 | | P - 4.000 | | S - 20.0 | | P - 4.000 | | S - 20.0 | | P - 4.000 | | S - 20.0 | |
| 100 | 1750 | 17.5 | .617 | .458 | 1650 | 1770 | .797 | .607 | 2186 | 1625 | 1.21 | .912 | 3284 | 2170 | 1.59 | 1.22 | 4385 | 2275 |
| | | | Actual Ratio - 100.00 | | | | Actual Ratio - 100.00 | | | | Actual Ratio - 100.00 | | | | Actual Ratio - 100.00 | | | |
| | | | P - 4.000 | | S - 25.0 | | P - 5.000 | | S - 20.0 | | P - 5.000 | | S - 20.0 | | P - 5.000 | | S - 20.0 | |
| 125 | 1750 | 14.0 | .509 | .361 | 1627 | 1770 | .649 | .475 | 2139 | 1625 | 1.03 | .746 | 3359 | 2170 | 1.30 | .958 | 4312 | 2275 |
| | | | Actual Ratio - 125.00 | | | | Actual Ratio - 125.00 | | | | Actual Ratio - 125.00 | | | | Actual Ratio - 125.00 | | | |
| | | | P - 5.000 | | S - 25.0 | | P - 5.000 | | S - 25.0 | | P - 5.000 | | S - 25.0 | | P - 5.000 | | S - 25.0 | |
| 150 | 1750 | 11.7 | .465 | .309 | 1669 | 1770 | .551 | .389 | 2100 | 1625 | .903 | .622 | 3362 | 2170 | 1.23 | .842 | 4547 | 2275 |
| | | | Actual Ratio - 150.00 | | | | Actual Ratio - 150.00 | | | | Actual Ratio - 150.00 | | | | Actual Ratio - 150.00 | | | |
| | | | P - 5.000 | | S - 30.0 | | P 5.000 | | S - 30.0 | | P - 5.000 | | S - 30.0 | | P - 5.000 | | S - 30.0 | |
| 200 | 1750 | 8.75 | .376 | .228 | 1640 | 1770 | .478 | .302 | 2174 | 1625 | .728 | .453 | 3266 | 2170 | .951 | .606 | 4361 | 2275 |
| | | | Actual Ratio - 200.00 | | | | Actual Ratio - 200.00 | | | | Actual Ratio - 200.00 | | | | Actual Ratio - 200.00 | | | |
| | | | P - 5.000 | | S - 40.0 | | P - 5.000 | | S - 40.0 | | P - 5.000 | | S - 40.0 | | P - 5.000 | | S - 40.0 | |
| 250 | 1750 | 7.00 | .308 | .174 | 1562 | 1770 | .385 | .228 | 2054 | 1625 | .619 | .358 | 3226 | 2170 | .772 | .460 | 4141 | 2275 |
| | | | Actual Ratio - 250.00 | | | | Actual Ratio - 250.00 | | | | Actual Ratio - 250.00 | | | | Actual Ratio - 250.00 | | | |
| | | | P - 5.000 | | S - 50.0 | | P - 5.000 | | S - 50.0 | | P - 5.000 | | S - 50.0 | | P - 5.000 | | S - 50.0 | |
| 300 | 1750 | 5.83 | .280 | .163 | 1688 | 1770 | .318 | .177 | 1912 | 1625 | .529 | .283 | 3062 | 2170 | .639 | .358 | 3868 | 2275 |
| | | | Actual Ratio - 287.27 | | | | Actual Ratio - 300.00 | | | | Actual Ratio - 300.00 | | | | Actual Ratio - 300.00 | | | |
| | | | P - 7.182 | | S - 40.0 | | P - 5.000 | | S - 60.0 | | P - 5.000 | | S - 60.0 | | P - 5.000 | | S - 60.0 | |
| 400 | 1750 | 4.23 | .176 | .092 | 1428 | 1770 | .237 | .127 | 1964 | 1625 | .402 | .204 | 3172 | 2170 | .483 | .258 | 4006 | 2275 |
| | | | Actual Ratio - 430.91 | | | | Actual Ratio - 430.91 | | | | Actual Ratio - 430.91 | | | | Actual Ratio - 430.91 | | | |
| | | | P - 7.182 | | S - 60.0 | | P - 7.182 | | S - 60.0 | | P - 7.182 | | S - 60.0 | | P - 7.182 | | S - 60.0 | |
| 500 | 1750 | 3.39 | .110 | .049 | 877 | 1770 | .137 | .064 | 1157 | 1625 | .238 | .109 | 1157 | 2170 | .270 | .129 | 2326 | 2275 |
| | | | Actual Ratio - 500.00 | | | | Actual Ratio - 500.00 | | | | Actual Ratio - 500.00 | | | | Actual Ratio - 500.00 | | | |
| | | | P - 5.000 | | S - 100.0 | | P - 5.000 | | S - 100.0 | | P - 5.000 | | S - 100.0 | | P - 5.000 | | S - 100.0 | |
| 600 | 1750 | 2.93 | .122 | .056 | 1164 | 1770 | .154 | .075 | 1542 | 1625 | .270 | .127 | 2618 | 2170 | .307 | .150 | 3112 | 2275 |
| | | | Actual Ratio - 574.55 | | | | Actual Ratio - 574.55 | | | | Actual Ratio - 574.55 | | | | Actual Ratio - 574.55 | | | |
| | | | P - 7.182 | | S - 80.0 | | P - 7.182 | | S - 80.0 | | P - 7.182 | | S - 80.0 | | P - 7.182 | | S - 80.0 | |

*Note: All torque values listed in inch-pounds, all overhung load values listed in pounds. The point of application of the overhung load is considered to be one shaft diameter measured outward from the gear case housing. See page 90 for extended bearing (Styles DXFE & DXFEMQ) and input shaft overhung load (OHL) capacity. At speeds above 1750 RPM, units may become thermally limited. For extended operation, limit input HP to 1750 RPM catalog rating.*

# Double Reduction

## Helical / Worm Rating Table

| Ratio | Input RPM | Output RPM | Size 242 Input HP | Size 242 Output HP | Size 242 Output TQ | Size 242 OHL | Size 252 Input HP | Size 252 Output HP | Size 252 Output TQ | Size 252 OHL | Size 2600 Input HP | Size 2600 Output HP | Size 2600 Output TQ | Size 2600 OHL |
|---|---|---|---|---|---|---|---|---|---|---|---|---|---|---|
| 20:1 | 1750 | 87.5 | 9.80 | 8.74 | 6295 | 3010 | 14.87 | 13.25 | 9542 | 3370 | 18.05 | 16.18 | 11653 | 3723 |
| | | | Actual Ratio - 20.00 | | | | Actual Ratio - 20.00 | | | | Actual Ratio - 20.00 | | | |
| | | | P - 2.000 | | S - 10.0 | | P - 2.000 | | S - 10.0 | | P - 2.000 | | S - 10.0 | |
| 25 | 1750 | 70.0 | 6.99 | 6.17 | 5933 | 2800 | 10.07 | 8.96 | 8550 | 3100 | 10.07 | 8.80 | 8187 | 3723 |
| | | | Actual Ratio - 26.69 | | | | Actual Ratio - 26.48 | | | | Actual Ratio - 25.83 | | | |
| | | | P - 5.167 | | S - 5.167 | | P - 5.167 | | S - 5.125 | | P - 5.167 | | S - 5.0 | |
| 30 | 1750 | 58.3 | 7.14 | 6.13 | 6620 | 3190 | 11.35 | 10.01 | 10818 | 3560 | 13.43 | 11.61 | 12544 | 3723 |
| | | | Actual Ratio - 30.00 | | | | Actual Ratio - 30.00 | | | | Actual Ratio - 30.00 | | | |
| | | | P - 2.000 | | S - 15.0 | | P - 2.000 | | S - 15.0 | | P - 2.000 | | S - 15.0 | |
| 40 | 1750 | 43.8 | 6.26 | 5.42 | 7896 | 3010 | 10.63 | 9.16 | 13343 | 3370 | 11.35 | 9.83 | 14316 | 3723 |
| | | | Actual Ratio - 40.45 | | | | Actual Ratio - 40.45 | | | | Actual Ratio - 40.45 | | | |
| | | | P - 4.045 | | S - 10.0 | | P - 4.045 | | S - 10.0 | | P - 4.045 | | S - 10.0 | |
| 50 | 1750 | 35.0 | 5.19 | 4.38 | 8156 | 3010 | 9.04 | 7.69 | 14312 | 3370 | 10.07 | 8.60 | 16001 | 3723 |
| | | | Actual Ratio - 51.67 | | | | Actual Ratio - 51.67 | | | | Actual Ratio - 51.67 | | | |
| | | | P - 5.167 | | S - 10.0 | | P - 5.167 | | S - 10.0 | | P - 5.167 | | S - 10.0 | |
| 60 | 1750 | 29.2 | 4.62 | 3.81 | 8319 | 3190 | 7.98 | 6.54 | 14282 | 3560 | 10.06 | 8.32 | 18176 | 3723 |
| | | | Actual Ratio - 60.68 | | | | Actual Ratio - 60.68 | | | | Actual Ratio - 60.68 | | | |
| | | | P - 4.045 | | S - 15.0 | | P - 4.045 | | S - 15.0 | | P - 4.045 | | S - 15.0 | |
| 75 | 1750 | 23.3 | 3.84 | 3.24 | 8788 | 3010 | 6.69 | 5.49 | 15334 | 3560 | 8.68 | 7.06 | 19700 | 3723 |
| | | | Actual Ratio - 75.38 | | | | Actual Ratio - 77.50 | | | | Actual Ratio - 77.50 | | | |
| | | | P - 7.538 | | S - 10.0 | | P - 5.167 | | S - 15.0 | | P - 5.167 | | S - 15.0 | |
| 85 | 1750 | 21.6 | 3.75 | 2.97 | 8642 | 3320 | 6.42 | 5.00 | 14569 | 3560 | 8.10 | 6.40 | 18647 | 3723 |
| | | | Actual Ratio - 80.90 | | | | Actual Ratio - 80.86 | | | | Actual Ratio - 80.90 | | | |
| | | | P - 4.045 | | S - 20.0 | | P - 4.043 | | S - 20.0 | | P - 4.045 | | S - 20.0 | |
| 100 | 1750 | 17.5 | 3.12 | 2.43 | 9034 | 3320 | 5.50 | 4.19 | 15597 | 3560 | 7.00 | 5.41 | 20122 | 3723 |
| | | | Actual Ratio - 103.33 | | | | Actual Ratio - 103.33 | | | | Actual Ratio - 103.33 | | | |
| | | | P - 5.167 | | S - 20.0 | | P - 5.167 | | S - 20.0 | | P - 5.167 | | S - 20.0 | |
| 125 | 1750 | 14.0 | 2.55 | 1.91 | 8879 | 3445 | 4.65 | 3.37 | 15677 | 3560 | 5.91 | 4.35 | 20229 | 3723 |
| | | | Actual Ratio - 129.17 | | | | Actual Ratio - 129.17 | | | | Actual Ratio - 129.17 | | | |
| | | | P - 5.167 | | S - 25.0 | | P - 5.167 | | S - 25.0 | | P - 5.167 | | S - 25.0 | |
| 150 | 1750 | 11.7 | 2.31 | 1.75 | 9510 | 3320 | 4.21 | 3.10 | 16856 | 3560 | 5.41 | 4.05 | 21969 | 3723 |
| | | | Actual Ratio - 150.77 | | | | Actual Ratio - 150.77 | | | | Actual Ratio - 150.77 | | | |
| | | | P - 7.538 | | S - 20.0 | | P - 7.538 | | S - 20.0 | | P - 7.538 | | S - 20.0 | |
| 200 | 1750 | 8.75 | 1.85 | 1.21 | 8989 | 3715 | 3.32 | 2.09 | 15515 | 3560 | 4.19 | 2.69 | 20026 | 3723 |
| | | | Actual Ratio - 206.67 | | | | Actual Ratio - 206.67 | | | | Actual Ratio - 206.67 | | | |
| | | | P - 5.167 | | S - 40.0 | | P - 5.167 | | S - 40.0 | | P - 5.167 | | S - 40.0 | |
| 250 | 1750 | 7.00 | 1.50 | .92 | 8530 | 3730 | 2.81 | 1.62 | 15057 | 3560 | 3.53 | 2.09 | 19434 | 3723 |
| | | | Actual Ratio - 258.33 | | | | Actual Ratio - 258.33 | | | | Actual Ratio - 258.33 | | | |
| | | | P - 5.167 | | S - 50.0 | | P - 5.167 | | S - 50.0 | | P - 5.167 | | S - 50.0 | |
| 300 | 1750 | 5.83 | 1.39 | .87 | 9456 | 3715 | 2.59 | 1.54 | 16757 | 3560 | 3.30 | 2.01 | 21844 | 3723 |
| | | | Actual Ratio - 301.54 | | | | Actual Ratio - 301.54 | | | | Actual Ratio - 301.54 | | | |
| | | | P - 7.538 | | S - 40.0 | | P - 7.538 | | S - 40.0 | | P - 7.538 | | S - 40.0 | |
| 400 | 1750 | 4.23 | .781 | .417 | 6210 | 3740 | 1.718 | .797 | 11864 | 3590 | 2.185 | 1.077 | 16037 | 3723 |
| | | | Actual Ratio - 413.33 | | | | Actual Ratio - 413.33 | | | | Actual Ratio - 413.33 | | | |
| | | | P - 5.167 | | S - 80.0 | | P - 5.167 | | S - 80.0 | | P - 5.167 | | S - 80.0 | |
| 500 | 1750 | 3.39 | .526 | .257 | 4782 | 3750 | 1.206 | .522 | 9707 | 3600 | 1.559 | .692 | 12884 | 3723 |
| | | | Actual Ratio - 516.67 | | | | Actual Ratio - 516.67 | | | | Actual Ratio - 516.67 | | | |
| | | | P - 5.167 | | S - 100.0 | | P - 5.167 | | S - 100.0 | | P - 5.167 | | S - 100.0 | |
| 600 | 1750 | 2.93 | .588 | .298 | 6468 | 3740 | 1.374 | .590 | 12810 | 3590 | 1.750 | .801 | 17397 | 3723 |
| | | | Actual Ratio - 603.08 | | | | Actual Ratio - 603.08 | | | | Actual Ratio - 603.08 | | | |
| | | | P - 7.538 | | S - 80.0 | | P - 7.538 | | S - 80.0 | | P - 7.538 | | S - 80.0 | |

*Note: All torque values listed in inch-pounds, all overhung load values listed in pounds. The point of application of the overhung load is considered to be one shaft diameter measured outward from the gear case housing. See page 90 for extended bearing (Styles DXFE & DXFEMQ) and input shaft overhung load (OHL) capacity. At speeds above 1750 RPM, units may become thermally limited. For extended operation, limit input HP to 1750 RPM catalog rating.*

# Double Reduction

## Helical / Worm Rating Table

| Ratio | Input RPM | Output RPM | Size 2700 Input HP | Size 2700 Output HP | Size 2700 Output TQ | Size 2700 OHL | Size 2800 Input HP | Size 2800 Output HP | Size 2800 Output TQ | Size 2800 OHL | Size 21000 Input HP | Size 21000 Output HP | Size 21000 Output TQ | Size 21000 OHL |
|---|---|---|---|---|---|---|---|---|---|---|---|---|---|---|
| 25:1 | 1750 | 70.0 | 19.6 | 18.1 | 17000 | 6209 | 31.9 | 29.7 | 26900 | 7761 | 42.1 | 39.3 | 36800 | 11028 |
| | | | Actual Ratio - 26.05 | | | | Actual Ratio - 25.23 | | | | Actual Ratio - 26.02 | | | |
| | | | P - 5.083 | | S - 5.125 | | P - 4.923 | | S - 5.125 | | P - 5.077 | | S - 5.125 | |
| 37.5 | 1750 | 46.7 | 18.6 | 16.9 | 22900 | 6209 | 26.8 | 24.6 | 32300 | 7761 | 42.1 | 39.0 | 52300 | 11028 |
| | | | Actual Ratio - 37.61 | | | | Actual Ratio - 36.43 | | | | Actual Ratio - 37.23 | | | |
| | | | P - 5.083 | | S - 7.400 | | P - 4.923 | | S - 7.400 | | P - 5.077 | | S - 7.333 | |
| 50 | 1750 | 35.0 | 15.2 | 13.7 | 24400 | 6209 | 21.7 | 19.7 | 34100 | 7761 | 37.8 | 34.6 | 61700 | 11028 |
| | | | Actual Ratio - 49.56 | | | | Actual Ratio - 48.00 | | | | Actual Ratio - 49.50 | | | |
| | | | P - 5.083 | | S - 9.750 | | P - 4.923 | | S - 9.750 | | P - 5.077 | | S - 9.750 | |
| 75 | 1750 | 23.3 | 11.2 | 9.74 | 26200 | 6209 | 16.2 | 14.3 | 37100 | 7761 | 28.4 | 25.2 | 67700 | 11028 |
| | | | Actual Ratio - 74.55 | | | | Actual Ratio - 72.20 | | | | Actual Ratio - 74.46 | | | |
| | | | P - 5.083 | | S - 14.667 | | P - 4.923 | | S - 14.667 | | P - 5.077 | | S - 14.667 | |
| 100 | 1750 | 17.5 | 8.95 | 7.41 | 27800 | 6209 | 12.6 | 10.6 | 38600 | 7761 | 22.3 | 19.0 | 71400 | 11028 |
| | | | Actual Ratio - 104.20 | | | | Actual Ratio - 100.92 | | | | Actual Ratio - 104.08 | | | |
| | | | P - 5.083 | | S - 20.500 | | P - 4.923 | | S - 20.500 | | P - 5.077 | | S - 20.500 | |
| 125 | 1750 | 14.0 | 7.56 | 6.14 | 27500 | 6209 | 10.8 | 8.90 | 38600 | 7761 | 18.9 | 15.8 | 70600 | 11028 |
| | | | Actual Ratio - 124.53 | | | | Actual Ratio - 120.61 | | | | Actual Ratio - 124.39 | | | |
| | | | P - 5.083 | | S - 24.500 | | P - 4.923 | | S - 24.500 | | P - 5.077 | | S - 24.500 | |
| 138 | 1750 | 12.7 | 6.9 | 5.84 | 29000 | 6209 | 10.2 | 8.75 | 41200 | 7761 | 17.8 | 15.4 | 79000 | 11028 |
| | | | Actual Ratio - 138.07 | | | | Actual Ratio - 130.65 | | | | Actual Ratio - 139.22 | | | |
| | | | P - 9.414 | | S - 14.667 | | P - 8.908 | | S - 14.667 | | P - 9.492 | | S - 14.667 | |
| 150 | 1750 | 11.7 | 6.26 | 4.95 | 26700 | 6209 | 9.05 | 7.27 | 38000 | 7761 | 15.8 | 13.0 | 69000 | 11028 |
| | | | Actual Ratio - 149.95 | | | | Actual Ratio - 145.23 | | | | Actual Ratio - 149.77 | | | |
| | | | P - 5.083 | | S - 29.500 | | P - 4.923 | | S - 29.500 | | P - 5.077 | | S - 29.500 | |
| 185 | 1750 | 9.46 | 5.52 | 4.43 | 30800 | 6209 | 8.00 | 6.53 | 42900 | 7761 | 14.2 | 11.7 | 83900 | 11028 |
| | | | Actual Ratio - 192.99 | | | | Actual Ratio - 182.61 | | | | Actual Ratio - 194.59 | | | |
| | | | P - 9.414 | | S - 20.500 | | P - 8.908 | | S - 20.500 | | P - 9.492 | | S - 20.500 | |
| 200 | 1750 | 8.75 | 5.06 | 3.70 | 27100 | 6209 | 7.00 | 5.22 | 37000 | 7761 | 12.4 | 9.46 | 69200 | 11028 |
| | | | Actual Ratio - 203.32 | | | | Actual Ratio - 196.92 | | | | Actual Ratio - 203.08 | | | |
| | | | P - 5.083 | | S - 40.000 | | P - 4.923 | | S - 40.000 | | P - 5.077 | | S - 40.000 | |
| 210 | 1750 | 8.33 | 4.90 | 4.07 | 30200 | 6209 | 6.94 | 5.84 | 43200 | 7761 | 12.6 | 10.7 | 80800 | 11028 |
| | | | Actual Ratio - 205.92 | | | | Actual Ratio - 205.77 | | | | Actual Ratio - 212.23 | | | |
| | | | P - 14.040 | | S - 14.667 | | P - 14.030 | | S - 14.667 | | P - 14.470 | | S - 14.667 | |
| 250 | 1750 | 7.00 | 3.77 | 3.25 | 28500 | 6209 | 5.35 | 4.63 | 41100 | 7761 | 10.1 | 8.81 | 77300 | 11028 |
| | | | Actual Ratio - 244.04 | | | | Actual Ratio - 246.38 | | | | Actual Ratio - 243.65 | | | |
| | | | P - 25.030 | | S - 9.750 | | P - 25.270 | | S - 9.750 | | P - 24.99 | | S - 9.750 | |
| 280 | 1750 | 6.25 | 3.98 | 3.09 | 32000 | 6209 | 5.50 | 4.38 | 45300 | 7761 | 10.1 | 8.13 | 86800 | 11028 |
| | | | Actual Ratio - 287.82 | | | | Actual Ratio - 287.62 | | | | Actual Ratio - 296.64 | | | |
| | | | P - 14.040 | | S - 20.500 | | P - 14.030 | | S - 20.500 | | P - 14.470 | | S - 20.500 | |
| 300 | 1750 | 5.83 | 3.31 | 2.23 | 24500 | 6209 | 4.78 | 3.23 | 34300 | 7761 | 7.15 | 5.69 | 62400 | 11028 |
| | | | Actual Ratio - 304.98 | | | | Actual Ratio - 295.38 | | | | Actual Ratio - 304.62 | | | |
| | | | P - 5.083 | | S - 60.000 | | P - 4.923 | | S - 60.000 | | P - 5.077 | | S - 60.000 | |

*Note: All torque values listed in inch-pounds, all overhung load values listed in pounds. The point of application of the overhung load is considered to be one shaft diameter measured outward from the gear case housing. See page 90 for extended bearing (Styles DXFE & DXFEMQ) and input shaft overhung load (OHL) capacity. At speeds above 1750 RPM, units may become thermally limited. For extended operation, limit input HP to 1750 RPM catalog rating.*

# Double Reduction

## Helical / Worm Thrust & Overhung Load Ratings

*Low Speed Shaft* **Thrust Ratings - *Double Reduction Helical/Worm (LBS.)***

| Unit Size | 213 | 215 | 218 | 220 | 224 | 226 | 230 | 232 | 242 | 252 | 2600 | 2700 | 2800 | 21000 |
|---|---|---|---|---|---|---|---|---|---|---|---|---|---|---|
| All Ratios | 1144 | 1144 | 1144 | 1144 | 2091 | 2091 | 2574 | 2574 | 2533 | 3412 | 3990 | 4009 | 4777 | 6808 |

### Extended Bearing Design Output Shaft Overhung Load Capacity (LBS.)

| Unit Size | 230 | 232 | 242 | 252 | 2600 | 2700 | 2800 | 21000 |
|---|---|---|---|---|---|---|---|---|
| O.H.L. Capacity | 605 | 959 | 1200 | 2524 | 2245 | 3791 | 4850 | 8500 |

*O.H.L. = Overhung Load*
*Note: Load located at end of output shaft*

### High Speed Shaft Overhung Load Capacity (LBS.)

| Unit Size | 213 | 215 | 218 | 220 | 224 | 226 | 230 | 232 | 242 | 252 | 2600 | 2700 | 2800 | 21000 |
|---|---|---|---|---|---|---|---|---|---|---|---|---|---|---|
| O.H.L. Capacity | 75 | 75 | 75 | 75 | 75 | 75 | 75 | 75 | 150 | 150 | 150 | 175 | 300 | 450 |

*O.H.L. = Overhung Load*
*Note: The point of application of the overhung load is considered to be one shaft diameter measured outward from the gear case housing.*

### Hollow Output Shaft Bore Sizes

| Fract. Size | Decimal Equiv. | KWY* | 213 | 215 | 218 | 220 | 224 | 226 | 230 | 232 | 242 | 252 | 2600 | 2700 | 2800 | 21000 |
|---|---|---|---|---|---|---|---|---|---|---|---|---|---|---|---|---|
| 5/8 | .625 | 3/16 x 3/32 | * | * | * | | | | | | | | | | | |
| 11/16 | .688 | 3/16 x 3/32 | | | * | | | | | | | | | | | |
| 3/4 | .750 | 3/16 x 3/32 | | | * | | | | | | | | | | | |
| 7/8 | .875 | 3/16 x 3/32 | | | * | | | | | | | | | | | |
| 1 | 1.000 | 1/4 x 1/8 | | | * | * | * | * | | | | | | | | |
| 1-1/8 | 1.125 | 1/4 x 1/8 | | | | * | * | * | | | | | | | | |
| 1-3/16 | 1.188 | 1/4 x 1/8 | | | | * | * | * | * | * | | | | | | |
| 1-1/4 | 1.250 | 1/4 x 1/8 | | | | * | * | * | * | * | | | | | | |
| 1-7/16 | 1.438 | 3/8 x 3/16 | | | | * | * | * | * | * | * | | | | | |
| 1-1/2 | 1.500 | 3/8 x 3/16 | | | | | | | * | * | * | | | | | |
| 1-5/8 | 1.625 | 3/8 x 3/16 | | | | | | | * | * | * | | | | | |
| 1-11/16 | 1.688 | 3/8 x 3/16 | | | | | | | * | * | * | | | | | |
| 1-3/4 | 1.750 | 3/8 x 3/16 | | | | | | | * | * | * | | | | | |
| 1-7/8 | 1.875 | 1/2 x 1/4 | | | | | | | | | * | | | | | |
| 1-15/16 | 1.938 | 1/2 x 1/4 | | | | | | | * | * | * | | | | | |
| 2 | 2.000 | 1/2 x 1/4 | | | | | | | | | * | * | * | | | |
| 2-3/16 | 2.188 | 1/2 x 1/4 | | | | | | | | | * | * | * | | | |
| 2-1/4 | 2.250 | 1/2 x 1/4 | | | | | | | | | | * | * | | | |
| 2-7/16 | 2.438 | 5/8 x 5/16 | | | | | | | | | | * | * | * | | |
| 2-1/2 | 2.500 | 5/8 x 5/16 | | | | | | | | | | * | * | * | | |
| 2-11/16 | 2.688 | 5/8 x 5/16 | | | | | | | | | | * | * | * | | |
| 2-15/16 | 2.938 | 3/4 x 3/8 | | | | | | | | | | * | * | * | | |
| 3 | 3.000 | 3/4 x 3/8 | | | | | | | | | | * | * | * | | |
| 3-3/16 | 3.188 | 3/4 x 3/8 | | | | | | | | | | * | * | | | |
| 3-7/16 | 3.438 | 7/8 x 7/16 | | | | | | | | | | * | * | * | * | * |
| 3-15/16 | 3.938 | 1 x 1/2 | | | | | | | | | | | | * | * | * |
| 4-3/16 | 4.188 | 1 x 1/2 | | | | | | | | | | | | | * | |
| 4-7/16 | 4.438 | 1 x 1/2 | | | | | | | | | | | | | * | * |
| 4-15/16 | 4.938 | 1-1/4 x 5/8 | | | | | | | | | | | | | | * |
| 5-7/16 | 5.438 | 1-1/4 x 5/8 | | | | | | | | | | | | | | * |

**Dimensions refer to driven shaft.*
*Note: Special bores are available upon request. Consult factory for information.*

# Dimension Sheet Index
# Double Reduction Helical/Worm


| Style | Page |
|---|---|
| DX, DXM, DXMQ | 92 - 93 |
| DXT, DXTM, DXTMQ | 94 - 95 |
| DXU, DXUM, DXUMQ | 96 - 97 |
| DXV*(L or H)*, DXV*(L or H)*M, DXV*(L or H)*MQ | 98 - 99 |
| DXJ, DXJM, DXJMQ | 100 - 101 |
| DXF, DXFM, DXFMQ | 102 - 103 |
| DXH, DXHM, DXHMQ | 104 - 105 |
| DXFH, DXFHM, DXFHMQ | 106 - 107 |
| DXV*(L or H)*H, DXV*(L or H)*HM, DXV*(L or H)*HMQ | 108 - 109 |
| DXFE, DXFEM, DXFEMQ | 110 - 111 |


Contact factory for dimensions of styles not listed.

Note: All dimensions shown in dimension sheets are for reference only.
Contact factory for certified dimensions.

WARNING For safety, purchaser or user should provide protective guards over shaft extensions and any couplings, sheaves and belts, sprockets and chains, etc., mounted thereon.

# Double Reduction

## Helical / Worm Dimensions

### Style DX

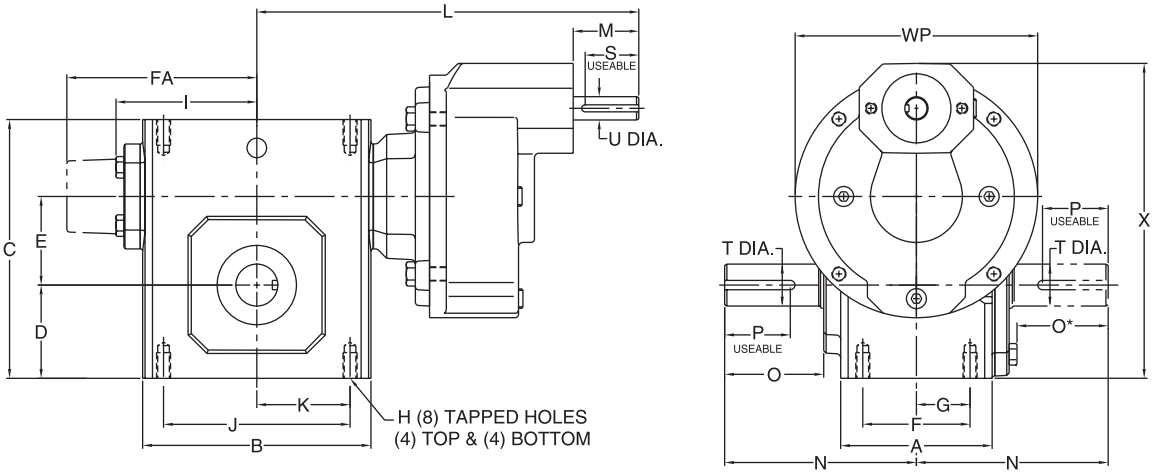


### Styles DXMQ & DXM

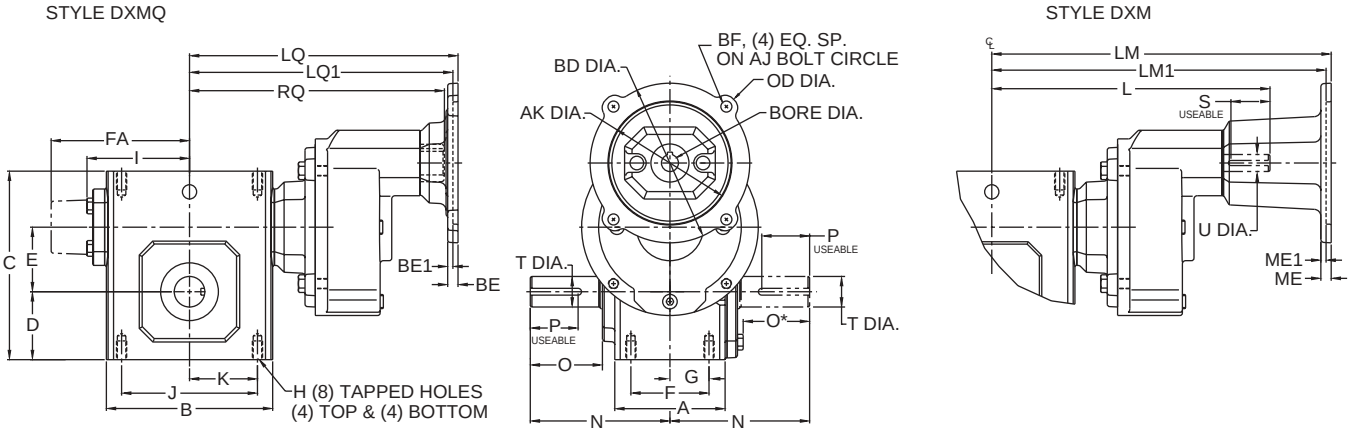


### Assemblies

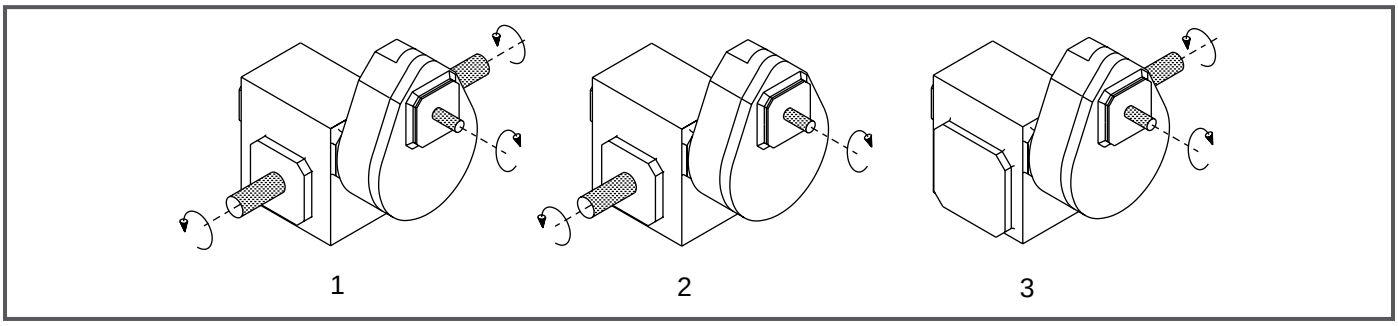


*Note: The input shaft may be rotated in either direction. Units are for mounting as shown. Contact factory for other mountings. Assembly positions also apply to motor flange units ("MQ" and "M").* ***See page 112 for additional assembly options.***

# Double Reduction

## Styles DX, DXMQ & DXM

| UNIT | A | B | C | D | E | F | FA | G | H | H Depth | I | J | K | L | M | N | O | O* |
|---|---|---|---|---|---|---|---|---|---|---|---|---|---|---|---|---|---|---|
| 213 | 2.82 | 3.80 | 4.66 | 1.72 | 1.333 | 2.00 | N/A | 1.00 | 5/16-18 | .50 | 2.61 | 3.25 | 1.63 | N/A | N/A | 4.00 | 2.16 | 1.94 |
| 215 | 3.44 | 4.88 | 5.38 | 1.91 | 1.540 | 2.75 | N/A | 1.38 | 5/16-18 | .63 | 3.14 | 4.19 | 2.09 | N/A | N/A | 4.31 | 2.11 | 1.90 |
| 218 | 3.56 | 5.06 | 5.75 | 2.06 | 1.750 | 2.75 | N/A | 1.38 | 5/16-18 | .63 | 3.24 | 4.19 | 2.09 | N/A | N/A | 4.31 | 2.05 | 1.84 |
| 220 | 3.81 | 5.80 | 6.38 | 2.28 | 2.063 | 3.00 | N/A | 1.50 | 5/16-18 | .63 | 3.61 | 4.75 | 2.38 | N/A | N/A | 4.68 | 2.29 | 2.08 |
| 224 | 4.06 | 6.12 | 6.94 | 2.50 | 2.375 | 2.88 | N/A | 1.44 | 3/8-16 | .69 | 3.77 | 5.00 | 2.50 | 10.24 | 1.76 | 5.14 | 2.66 | 2.44 |
| 226 | 4.84 | 7.12 | 8.00 | 2.94 | 2.625 | 3.38 | N/A | 1.69 | 3/8-16 | .69 | 4.34 | 6.38 | 3.19 | 10.80 | 1.76 | 5.63 | 2.73 | 2.52 |
| 230 | 5.25 | 8.12 | 8.88 | 3.25 | 3.000 | 4.00 | N/A | 2.00 | 7/16-14 | .88 | 4.84 | 7.00 | 3.50 | 11.30 | 1.76 | 6.75 | 3.60 | 3.36 |
| 232 | 5.75 | 8.50 | 9.38 | 3.50 | 3.250 | 4.00 | N/A | 2.00 | 7/16-14 | .88 | 5.02 | 7.50 | 3.75 | 11.49 | 1.76 | 7.06 | 3.66 | 3.42 |
| 242 | 6.13 | 10.25 | 11.38 | 4.44 | 4.250 | 5.00 | N/A | 2.50 | 5/8-11 | 1.00 | 6.10 | 8.50 | 4.25 | 17.48 | 3.61 | 8.12 | 4.50 | 4.21 |
| 252 | 7.19 | 13.00 | 14.00 | 5.12 | 5.250 | 5.81 | N/A | 2.91 | 5/8-11 | 1.25 | 7.50 | 11.00 | 5.50 | 18.88 | 3.61 | 9.06 | 4.78 | 4.53 |
| 2600 | 8.13 | 14.25 | 16.50 | 6.50 | 6.000 | 6.38 | 10.24 | 3.19 | 5/8-11 | 1.00 | N/A | 12.75 | 6.38 | 19.60 | 3.61 | 10.00 | 4.65 | 4.65 |
| 2700 | 7.63 | 14.88 | 18.91 | 7.59 | 7.000 | 5.50 | 10.63 | 2.75 | 1-8 | 1.56 | N/A | 12.50 | 6.25 | 19.68 | 2.50 | 11.76 | 5.65 | 5.65 |
| 2800 | 8.63 | 17.00 | 20.96 | 8.86 | 8.000 | 6.50 | 11.93 | 3.25 | 1-8 | 1.66 | N/A | 14.25 | 7.13 | 21.30 | 3.00 | 12.25 | 5.98 | 5.98 |
| 21000 | 9.53 | 20.88 | 25.47 | 10.36 | 10.000 | 6.88 | 14.34 | 3.44 | 1 1/4-7 | 2.04 | N/A | 17.75 | 8.88 | 25.78 | 3.50 | 14.75 | 6.76 | 6.76 |

| UNIT | P** | S** | T Dia. | U Dia. | WP | X |
|---|---|---|---|---|---|---|
| 213 | 3/16 x 1.50 | N/A | .625 | N/A | 5.00 | 6.16 |
| 215 | 3/16 x 1.50 | N/A | .750 | N/A | 5.00 | 6.56 |
| 218 | 3/16 x 1.38 | N/A | .875 | N/A | 5.00 | 6.92 |
| 220 | 1/4 x 1.44 | N/A | 1.000 | N/A | 5.00 | 7.45 |
| 224 | 1/4 x 1.75 | 3/16 x 1.44 | 1.125 | .625 | 6.50 | 8.45 |
| 226 | 1/4 x 2.00 | 3/16 x 1.44 | 1.250 | .625 | 6.50 | 9.13 |
| 230 | 1/4 X 2.25 | 3/16 x 1.44 | 1.250 | .625 | 6.50 | 9.82 |
| 232 | 3/8 X 2.62 | 3/16 x 1.44 | 1.500 | .625 | 6.50 | 10.32 |
| 242 | 1/2 X 3.06 | 1/4 x 2.17 | 1.875 | 1.250 | 8.50 | 13.31 |
| 252 | 1/2 x 3.50 | 1/4 x 2.17 | 2.000 | 1.250 | 8.50 | 14.99 |
| 2600 | 5/8 x 4.00 | 1/4 x 2.17 | 2.500 | 1.250 | 8.50 | 17.12 |
| 2700 | 5/8 x 4.00 | 1/4 x 2.25 | 2.750 | 1.125 | 10.36 | 21.84 |
| 2800 | 3/4 x 4.50 | 5/16 x 2.75 | 3.000 | 1.375 | 11.64 | 25.93 |
| 21000 | 7/8 x 5.00 | 3/8 x 3.25 | 3.750 | 1.500 | 13.85 | 31.35 |

**applies to double output shaft*
***keyway width by length*

*Note: Sizes 2700 through 21000 have an input shaft which is not aligned with the centerline of the gearbox.*

*Contact factory for further dimension details.*

## NEMA Motor Data

### NEMA Motor Flange Face Locations

| | 48CZ | | | 56C/140TC | | | 180TC | | | 210TC | | | 250TC | | |
|---|---|---|---|---|---|---|---|---|---|---|---|---|---|---|---|
| UNIT | LM | RQ | LQ | LM | RQ | LQ | LM1 | RQ | LQ1 | LM1 | RQ | LQ1 | LM! | RQ | LQ1 |
| 213 | N/A | 7.79 | 8.29 | N/A | 7.79 | 8.29 | N/A | N/A | N/A | N/A | N/A | N/A | N/A | N/A | N/A |
| 215 | N/A | 8.32 | 8.82 | N/A | 8.32 | 8.82 | N/A | N/A | N/A | N/A | N/A | N/A | N/A | N/A | N/A |
| 218 | N/A | 8.42 | 8.92 | N/A | 8.42 | 8.92 | N/A | N/A | N/A | N/A | N/A | N/A | N/A | N/A | N/A |
| 220 | N/A | 8.79 | 9.29 | N/A | 8.79 | 9.29 | N/A | N/A | N/A | N/A | N/A | N/A | N/A | N/A | N/A |
| 224 | N/A | N/A | N/A | 12.49 | 9.38 | 9.88 | N/A | N/A | N/A | N/A | N/A | N/A | N/A | N/A | N/A |
| 226 | N/A | N/A | N/A | 13.05 | 9.94 | 10.44 | N/A | N/A | N/A | N/A | N/A | N/A | N/A | N/A | N/A |
| 230 | N/A | N/A | N/A | 13.55 | 10.44 | 10.94 | N/A | N/A | N/A | N/A | N/A | N/A | N/A | N/A | N/A |
| 232 | N/A | N/A | N/A | 13.74 | 10.63 | 11.13 | N/A | N/A | N/A | N/A | N/A | N/A | N/A | N/A | N/A |
| 242 | N/A | N/A | N/A | N/A | N/A | N/A | 20.66 | 14.46 | 14.97 | 20.66 | 14.46 | 14.97 | 21.22 | 14.86 | 15.53 |
| 252 | N/A | N/A | N/A | N/A | N/A | N/A | 22.06 | 15.86 | 16.37 | 22.06 | 15.86 | 16.37 | 22.62 | 16.26 | 16.93 |
| 2600 | N/A | N/A | N/A | N/A | N/A | N/A | 22.78 | 16.58 | 17.09 | 22.78 | 16.58 | 17.09 | 23.34 | 16.98 | 17.65 |

*Note: All dimensions listed are for reference only. Contact factory for certified dimensions.*

**WARNING** *For safety, purchaser or user should provide protective guards over shaft extensions and any couplings, sheaves and belts, sprockets and chains, etc., mounted thereon.*

### NEMA Motor Mounting Dimensions

| Frame | AJ | AK | BD | OD | BE | BE1 | ME | ME1 | BORE | KWY.** | BF |
|---|---|---|---|---|---|---|---|---|---|---|---|
| 48CZ | 3.75 | 3.00 | 3.88 | 4.36 | .38 | N/A | .38 | N/A | .500 | 1/8 x 1/16 | .28 |
| 56C | 5.88 | 4.50 | 5.88 | 6.64 | .38 | N/A | .38 | N/A | .625 | 3/16 x 3/32 | .41 |
| 140TC | 5.88 | 4.50 | 5.88 | 6.64 | .38 | N/A | .38 | N/A | .875 | 3/16 x 3/32 | .41 |
| 180TC | 7.25 | 8.50 | 9.00 | 9.00 | N/A | .50 | N/A | .50 | 1.125 | 1/4 x 1/8 | .53 |
| 210TC | 7.25 | 8.50 | 9.00 | 9.00 | N/A | .50 | N/A | .50 | 1.375 | 5/16 x 5/32 | .53 |
| 250TC | 7.25 | 8.50 | 9.00 | 9.00 | N/A | .50 | N/A | .50 | 1.625 | 3/8 x 3/16 | .53 |

***keyway width by depth*

# Double Reduction

## Helical / Worm Dimensions

### Style DXT

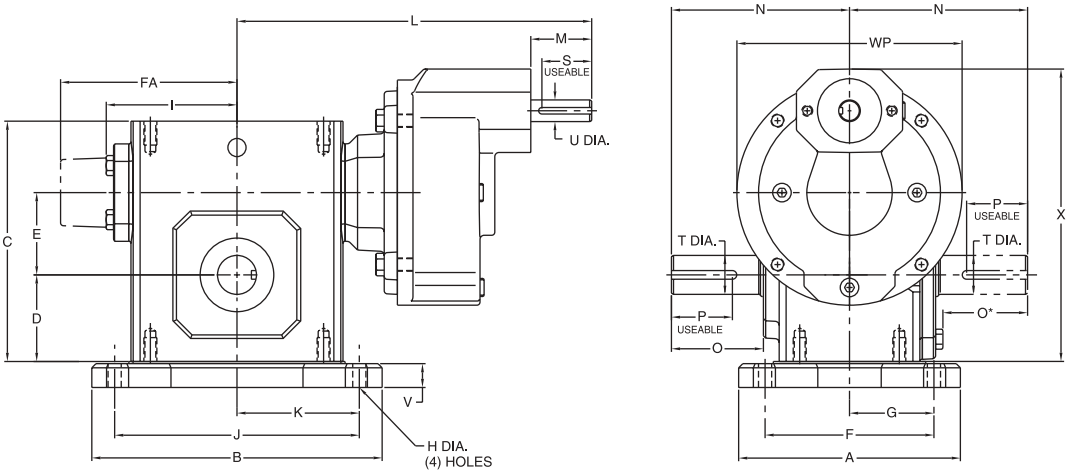


### Styles DXTMQ & DXTM

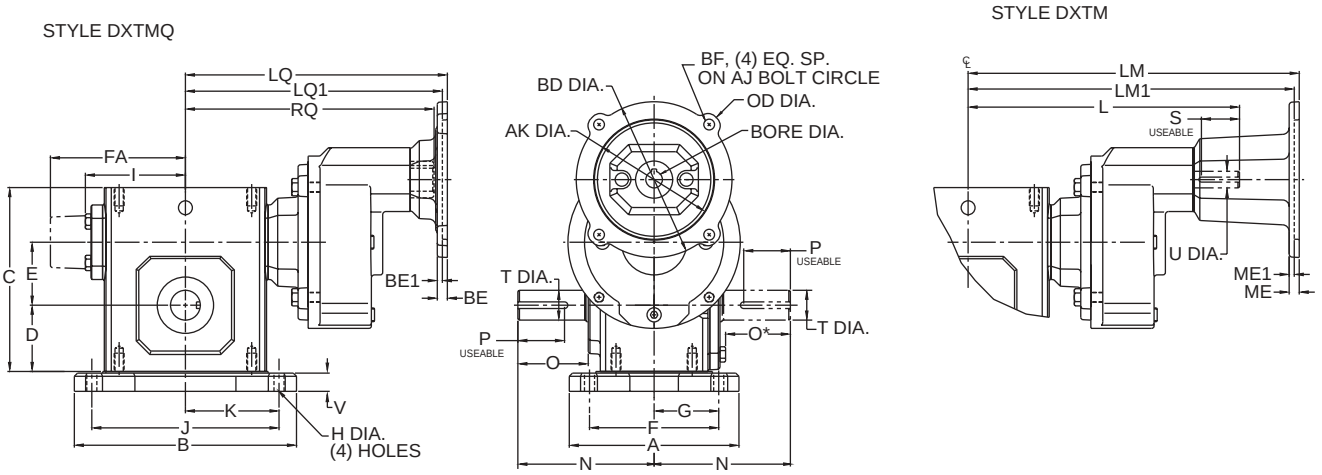


### Assemblies

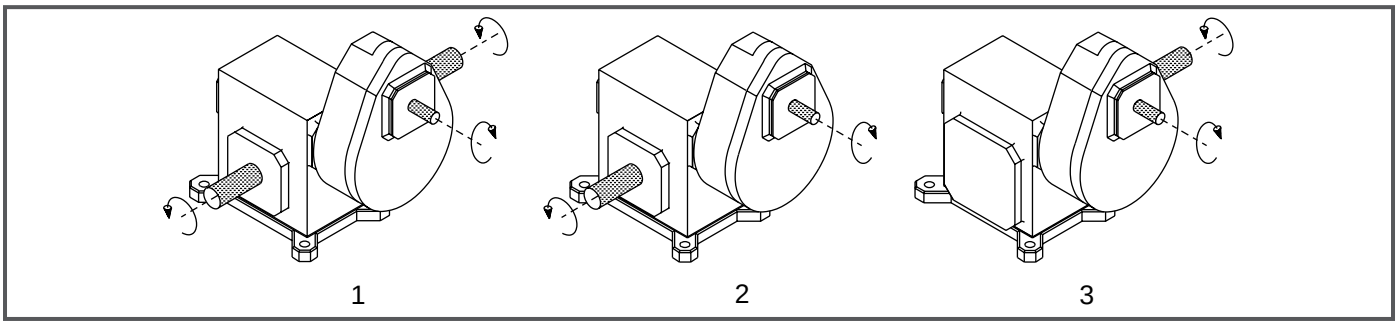


*Note: The input shaft may be rotated in either direction. Units are for mounting as shown. Contact factory for other mountings. Assembly positions also apply to motor flange units ("MQ" and "M").* ***See page 112 for additional assembly options.***

# Double Reduction

## Styles DXT, DXTMQ & DXTM

| UNIT | A | B | C | D | E | F | FA | G | H Dia. | I | J | K | L | M | N | O | O* | P** |
|---|---|---|---|---|---|---|---|---|---|---|---|---|---|---|---|---|---|---|
| | | | | | | 4.38 | | 2.19 | | | | | | | | | | |
| 213 | 5.38 | 5.37 | 5.19 | 2.25 | 1.333 | 3.31 | N/A | 1.66 | .34 | 2.61 | 4.37 | 2.19 | N/A | N/A | 4.00 | 2.16 | 1.94 | 3/16 x 1.50 |
| 215 | 5.56 | 6.50 | 5.97 | 2.50 | 1.540 | 4.31 | N/A | 2.16 | .41 | 3.14 | 5.25 | 2.63 | N/A | N/A | 4.31 | 2.11 | 1.90 | 3/16 x 1.50 |
| 218 | 5.75 | 6.99 | 6.44 | 2.75 | 1.750 | 4.50 | N/A | 2.25 | .41 | 3.24 | 5.75 | 2.88 | N/A | N/A | 4.31 | 2.05 | 1.84 | 3/16 x 1.38 |
| 220 | 6.00 | 7.69 | 7.09 | 3.00 | 2.063 | 4.69 | N/A | 2.34 | .47 | 3.61 | 6.38 | 3.19 | N/A | N/A | 4.68 | 2.29 | 2.08 | 1/4 x 1.44 |
| 224 | 6.19 | 8.37 | 7.69 | 3.25 | 2.375 | 4.88 | N/A | 2.44 | .47 | 3.77 | 7.06 | 3.53 | 10.24 | 1.76 | 5.14 | 2.66 | 2.44 | 1/4 x 1.75 |
| 226 | 6.50 | 9.25 | 8.75 | 3.69 | 2.625 | 5.25 | N/A | 2.63 | .53 | 4.34 | 8.00 | 4.00 | 10.80 | 1.76 | 5.63 | 2.73 | 2.52 | 1/4 x 2.00 |
| 230 | 7.50 | 10.00 | 9.63 | 4.00 | 3.000 | 5.88 | N/A | 2.94 | .53 | 4.84 | 8.44 | 4.22 | 11.30 | 1.76 | 6.75 | 3.60 | 3.36 | 1/4 x 2.25 |
| 232 | 7.75 | 11.12 | 10.25 | 4.38 | 3.250 | 6.13 | N/A | 3.06 | .53 | 5.02 | 9.50 | 4.75 | 11.49 | 1.76 | 7.06 | 3.66 | 3.42 | 3/8 x 2.62 |
| 242 | 9.75 | 13.24 | 12.38 | 5.44 | 4.250 | 7.63 | N/A | 3.81 | .66 | 6.10 | 11.12 | 5.56 | 17.48 | 3.61 | 8.12 | 4.50 | 4.21 | 1/2 x 3.06 |
| 252 | 10.50 | 16.24 | 15.13 | 6.25 | 5.250 | 8.38 | N/A | 4.19 | .78 | 7.50 | 14.12 | 7.06 | 18.88 | 3.61 | 9.06 | 4.78 | 4.53 | 1/2 x 3.50 |
| 2600 | 12.00 | 18.99 | 17.75 | 7.75 | 6.000 | 9.50 | 10.24 | 4.75 | .91 | N/A | 16.49 | 8.25 | 19.60 | 3.61 | 10.00 | 4.66 | 4.66 | 5/8 x 4.00 |
| 2700 | 13.38 | 15.38 | 20.33 | 9.00 | 7.000 | 11.25 | 10.63 | 5.63 | 1.13 | N/A | 13.00 | 6.50 | 19.68 | 2.50 | 11.76 | 5.69 | 5.69 | 5/8 x 4.00 |
| 2800 | 13.50 | 17.37 | 22.61 | 10.50 | 8.000 | 11.50 | 11.93 | 5.75 | 1.13 | N/A | 14.75 | 7.38 | 21.30 | 3.00 | 12.25 | 6.02 | 6.02 | 3/4 x 4.50 |
| 21000 | 16.88 | 21.24 | 27.12 | 12.00 | 10.000 | 14.00 | 14.34 | 7.00 | 1.44 | N/A | 17.00 | 8.50 | 25.78 | 3.50 | 14.75 | 6.80 | 6.80 | 7/8 x 5.00 |

| UNIT | S** | T Dia. | U Dia. | V | WP | X |
|---|---|---|---|---|---|---|
| 213 | N/A | .625 | N/A | .53 | 5.00 | 6.69 |
| 215 | N/A | .750 | N/A | .59 | 5.00 | 7.15 |
| 218 | N/A | .875 | N/A | .69 | 5.00 | 7.61 |
| 220 | N/A | 1.000 | N/A | .72 | 5.00 | 8.17 |
| 224 | 3/16 x 1.44 | 1.125 | .625 | .75 | 6.50 | 9.20 |
| 226 | 3/16 x 1.44 | 1.250 | .625 | .75 | 6.50 | 9.88 |
| 230 | 3/16 x 1.44 | 1.250 | .625 | .75 | 6.50 | 10.57 |
| 232 | 3/16 x 1.44 | 1.500 | .625 | .88 | 6.50 | 11.20 |
| 242 | 1/4 x 2.17 | 1.875 | 1.250 | 1.00 | 8.50 | 14.31 |
| 252 | 1/4 x 2.17 | 2.000 | 1.250 | 1.13 | 8.50 | 16.12 |
| 2600 | 1/4 x 2.17 | 2.500 | 1.250 | 1.25 | 8.50 | 18.37 |
| 2700 | 1/4 x 2.25 | 2.750 | 1.125 | 1.42 | 10.36 | 23.25 |
| 2800 | 5/16 x 2.75 | 3.000 | 1.375 | 1.65 | 11.64 | 27.57 |
| 21000 | 3/8 x 3.25 | 3.750 | 1.500 | 1.65 | 13.85 | 32.99 |

**applies to double output shaft*
***keyway width by length*

*Note: Sizes 2700 through 21000 have an input shaft which is not aligned with the centerline of the gearbox.*

*Contact factory for further dimension details.*

*Note: All dimensions listed are for reference only. Contact factory for certified dimensions.*

WARNING *For safety, purchaser or user should provide protective guards over shaft extensions and any couplings, sheaves and belts, sprockets and chains, etc., mounted thereon.*

## NEMA Motor Data

### NEMA Motor Flange Face Locations

| | 48CZ | | | 56C/140TC | | | 180TC | | | 210TC | | | 250TC | | |
|---|---|---|---|---|---|---|---|---|---|---|---|---|---|---|---|
| UNIT | LM | RQ | LQ | LM | RQ | LQ | LM1 | RQ | LQ1 | LM1 | RQ | LQ1 | LM! | RQ | LQ1 |
| 213 | N/A | 7.79 | 8.29 | N/A | 7.79 | 8.29 | N/A | N/A | N/A | N/A | N/A | N/A | N/A | N/A | N/A |
| 215 | N/A | 8.32 | 8.82 | N/A | 8.32 | 8.82 | N/A | N/A | N/A | N/A | N/A | N/A | N/A | N/A | N/A |
| 218 | N/A | 8.42 | 8.92 | N/A | 8.42 | 8.92 | N/A | N/A | N/A | N/A | N/A | N/A | N/A | N/A | N/A |
| 220 | N/A | 8.79 | 9.29 | N/A | 8.79 | 9.29 | N/A | N/A | N/A | N/A | N/A | N/A | N/A | N/A | N/A |
| 224 | N/A | N/A | N/A | 12.49 | 9.38 | 9.88 | N/A | N/A | N/A | N/A | N/A | N/A | N/A | N/A | N/A |
| 226 | N/A | N/A | N/A | 13.05 | 9.94 | 10.44 | N/A | N/A | N/A | N/A | N/A | N/A | N/A | N/A | N/A |
| 230 | N/A | N/A | N/A | 13.55 | 10.44 | 10.94 | N/A | N/A | N/A | N/A | N/A | N/A | N/A | N/A | N/A |
| 232 | N/A | N/A | N/A | 13.74 | 10.63 | 11.13 | N/A | N/A | N/A | N/A | N/A | N/A | N/A | N/A | N/A |
| 242 | N/A | N/A | N/A | N/A | N/A | N/A | 20.66 | 14.46 | 14.97 | 20.66 | 14.46 | 14.97 | 21.22 | 14.86 | 15.53 |
| 252 | N/A | N/A | N/A | N/A | N/A | N/A | 22.06 | 15.86 | 16.37 | 22.06 | 15.86 | 16.37 | 22.62 | 16.26 | 16.93 |
| 2600 | N/A | N/A | N/A | N/A | N/A | N/A | 22.78 | 16.58 | 17.09 | 22.78 | 16.58 | 17.09 | 23.34 | 16.98 | 17.65 |

### NEMA Motor Mounting Dimensions

| Frame | AJ | AK | BD | OD | BE | BE1 | ME | ME1 | BORE | KWY.** | BF |
|---|---|---|---|---|---|---|---|---|---|---|---|
| 48CZ | 3.75 | 3.00 | 3.88 | 4.36 | .38 | N/A | .38 | N/A | .500 | 1/8 x 1/16 | .28 |
| 56C | 5.88 | 4.50 | 5.88 | 6.64 | .38 | N/A | .38 | N/A | .625 | 3/16 x 3/32 | .41 |
| 140TC | 5.88 | 4.50 | 5.88 | 6.64 | .38 | N/A | .38 | N/A | .875 | 3/16 x 3/32 | .41 |
| 180TC | 7.25 | 8.50 | 9.00 | 9.00 | N/A | .50 | N/A | .50 | 1.125 | 1/4 x 1/8 | .53 |
| 210TC | 7.25 | 8.50 | 9.00 | 9.00 | N/A | .50 | N/A | .50 | 1.375 | 5/16 x 5/32 | .53 |
| 250TC | 7.25 | 8.50 | 9.00 | 9.00 | N/A | .50 | N/A | .50 | 1.625 | 3/8 x 3/16 | .53 |

**keyway width by depth*

# Double Reduction

## Helical / Worm Dimensions

### Style DXU

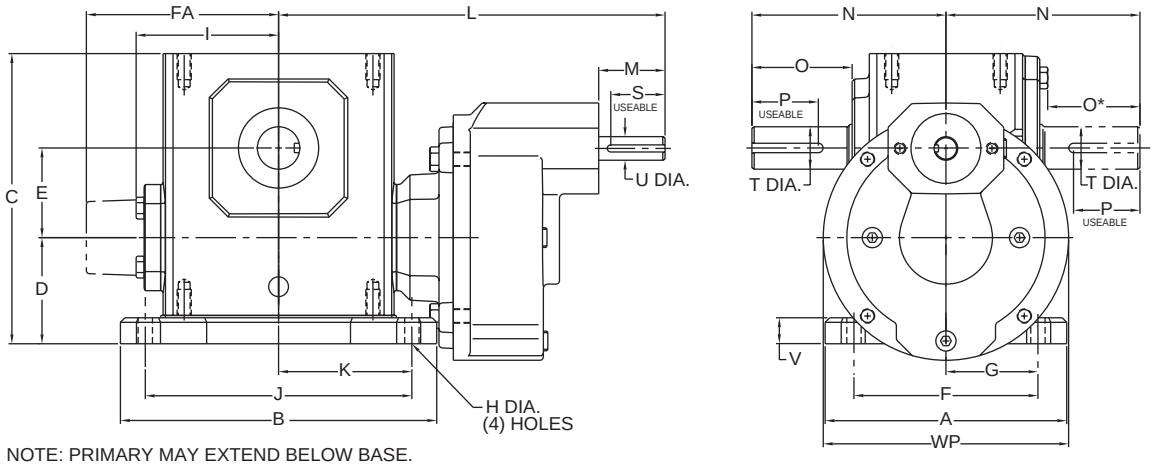


NOTE: PRIMARY MAY EXTEND BELOW BASE.

### Styles DXUMQ & DXUM

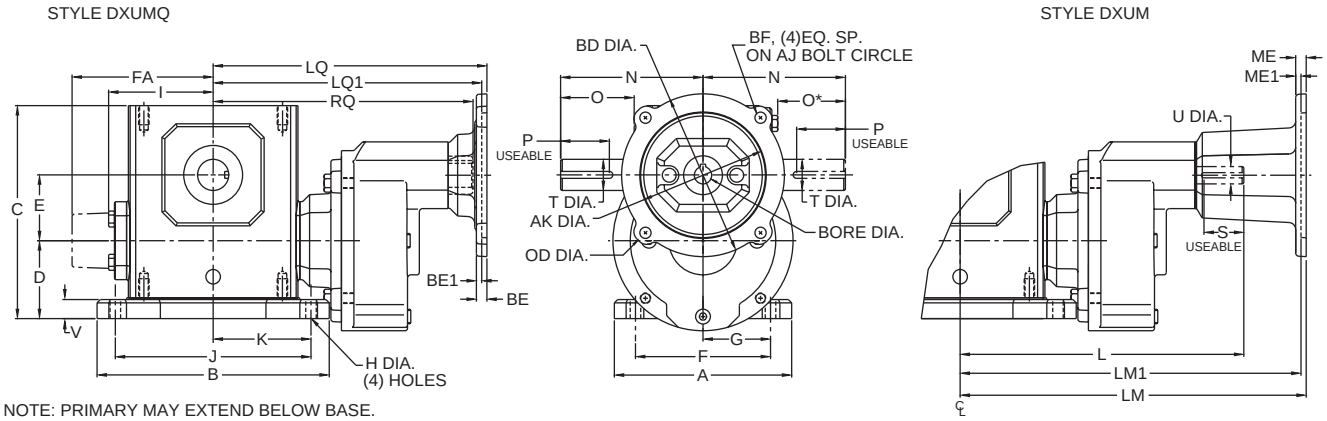


NOTE: PRIMARY MAY EXTEND BELOW BASE.

### Assemblies

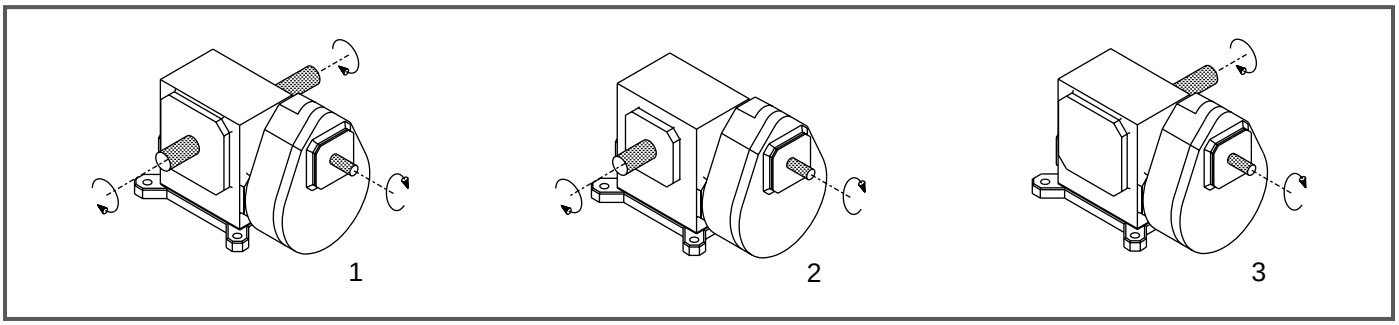


*Note: The input shaft may be rotated in either direction. Units are for mounting as shown. Contact factory for other mountings. Assembly positions also apply to motor flange units ("MQ" and "M").* ***See page 112 for additional assembly options.***

# Double Reduction

## Styles DXU, DXUMQ & DXUM

| UNIT | A | B | C | D | E | F | FA | G | H Dia. | I | J | K | L | M | N | O | O* |
|---|---|---|---|---|---|---|---|---|---|---|---|---|---|---|---|---|---|
| | | | | | | 4.38 | | 2.19 | | | | | | | | | |
| 213 | 5.38 | 5.37 | 5.19 | 2.14 | 1.333 | 3.31 | N/A | 1.66 | .34 | 2.61 | 4.37 | 2.19 | N/A | N/A | 4.00 | 2.16 | 1.94 |
| 215 | 5.56 | 6.50 | 5.97 | 2.52 | 1.540 | 4.31 | N/A | 2.16 | .41 | 3.14 | 5.25 | 2.63 | N/A | N/A | 4.31 | 2.11 | 1.90 |
| 218 | 5.75 | 6.99 | 6.44 | 2.63 | 1.750 | 4.50 | N/A | 2.25 | .41 | 3.24 | 5.75 | 2.88 | N/A | N/A | 4.31 | 2.05 | 1.84 |
| 220 | 6.00 | 7.69 | 7.09 | 2.75 | 2.063 | 4.69 | N/A | 2.34 | .47 | 3.61 | 6.38 | 3.19 | N/A | N/A | 4.68 | 2.29 | 2.08 |
| 224 | 6.19 | 8.37 | 7.69 | 2.81 | 2.375 | 4.88 | N/A | 2.44 | .47 | 3.77 | 7.06 | 3.53 | 10.24 | 1.76 | 5.14 | 2.66 | 2.44 |
| 226 | 6.50 | 9.25 | 8.75 | 3.19 | 2.625 | 5.25 | N/A | 2.63 | .53 | 4.34 | 8.00 | 4.00 | 10.80 | 1.76 | 5.63 | 2.73 | 2.52 |
| 230 | 7.50 | 10.00 | 9.63 | 3.38 | 3.000 | 5.88 | N/A | 2.94 | .53 | 4.84 | 8.44 | 4.22 | 11.30 | 1.76 | 6.75 | 3.60 | 3.36 |
| 232 | 7.75 | 11.12 | 10.25 | 3.50 | 3.250 | 6.13 | N/A | 3.06 | .53 | 5.02 | 9.50 | 4.75 | 11.49 | 1.76 | 7.06 | 3.66 | 3.42 |
| 242 | 9.75 | 13.24 | 12.38 | 3.69 | 4.250 | 7.63 | N/A | 3.81 | .66 | 6.10 | 11.12 | 5.56 | 17.48 | 3.61 | 8.12 | 4.50 | 4.21 |
| 252 | 10.50 | 16.24 | 15.13 | 4.76 | 5.250 | 8.38 | N/A | 4.19 | .78 | 7.50 | 14.12 | 7.06 | 18.88 | 3.61 | 9.06 | 4.78 | 4.53 |
| 2600 | 12.00 | 18.99 | 17.75 | 5.25 | 6.000 | 9.50 | 10.24 | 4.75 | .91 | N/A | 16.49 | 8.25 | 19.60 | 3.61 | 10.00 | 4.66 | 4.66 |
| 2700 | 13.38 | 15.38 | 20.33 | 5.74 | 7.000 | 11.25 | 10.63 | 5.63 | 1.13 | N/A | 13.00 | 6.50 | 19.68 | 2.50 | 11.76 | 5.69 | 5.69 |
| 2800 | 13.50 | 17.37 | 22.61 | 5.75 | 8.000 | 11.50 | 11.93 | 5.75 | 1.13 | N/A | 14.75 | 7.38 | 21.30 | 3.00 | 12.25 | 6.02 | 6.02 |
| 21000 | 16.88 | 21.24 | 27.12 | 6.76 | 10.000 | 14.00 | 14.34 | 7.00 | 1.44 | N/A | 17.00 | 8.50 | 25.78 | 3.50 | 14.75 | 6.80 | 6.80 |

| UNIT | P** | S** | T Dia. | U Dia. | V | WP |
|---|---|---|---|---|---|---|
| 213 | 3/16 x 1.50 | N/A | .625 | N/A | .53 | 5.00 |
| 215 | 3/16 x 1.50 | N/A | .750 | N/A | .59 | 5.00 |
| 218 | 3/16 x 1.38 | N/A | .875 | N/A | .69 | 5.00 |
| 220 | 1/4 x 1.44 | N/A | 1.000 | N/A | .72 | 5.00 |
| 224 | 1/4 x 1.75 | 3/16 x 1.44 | 1.125 | .625 | .75 | 6.50 |
| 226 | 1/4 x 2.00 | 3/16 x 1.44 | 1.250 | .625 | .75 | 6.50 |
| 230 | 1/4 X 2.25 | 3/16 x 1.44 | 1.250 | .625 | .75 | 6.50 |
| 232 | 3/8 X 2.62 | 3/16 x 1.44 | 1.500 | .625 | .88 | 6.50 |
| 242 | 1/2 X 3.06 | 1/4 x 2.17 | 1.875 | 1.250 | 1.00 | 8.50 |
| 252 | 1/2 x 3.50 | 1/4 x 2.17 | 2.000 | 1.250 | 1.13 | 8.50 |
| 2600 | 5/8 x 4.00 | 1/4 x 2.17 | 2.500 | 1.250 | 1.25 | 8.50 |
| 2700 | 5/8 x 4.00 | 1/4 x 2.25 | 2.750 | 1.125 | 1.42 | 10.36 |
| 2800 | 3/4 x 4.50 | 5/16 x 2.75 | 3.000 | 1.375 | 1.65 | 11.64 |
| 21000 | 7/8 x 5.00 | 3/8 x 3.25 | 3.750 | 1.500 | 1.65 | 13.85 |

**applies to double output shaft*
***keyway width by length*

*Note: Sizes 2700 through 21000 have an input shaft which is not aligned with the centerline of the gearbox.*

*Contact factory for further dimension details.*

## NEMA Motor Data

### NEMA Motor Flange Face Locations

| | 48CZ | | | 56C/140TC | | | 180TC | | | 210TC | | | 250TC | | |
|---|---|---|---|---|---|---|---|---|---|---|---|---|---|---|---|
| UNIT | LM | RQ | LQ | LM | RQ | LQ | LM1 | RQ | LQ1 | LM1 | RQ | LQ1 | LM! | RQ | LQ1 |
| 213 | N/A | 7.79 | 8.29 | N/A | 7.79 | 8.29 | N/A | N/A | N/A | N/A | N/A | N/A | N/A | N/A | N/A |
| 215 | N/A | 8.32 | 8.82 | N/A | 8.32 | 8.82 | N/A | N/A | N/A | N/A | N/A | N/A | N/A | N/A | N/A |
| 218 | N/A | 8.42 | 8.92 | N/A | 8.42 | 8.92 | N/A | N/A | N/A | N/A | N/A | N/A | N/A | N/A | N/A |
| 220 | N/A | 8.79 | 9.29 | N/A | 8.79 | 9.29 | N/A | N/A | N/A | N/A | N/A | N/A | N/A | N/A | N/A |
| 224 | N/A | N/A | N/A | 12.49 | 9.38 | 9.88 | N/A | N/A | N/A | N/A | N/A | N/A | N/A | N/A | N/A |
| 226 | N/A | N/A | N/A | 13.05 | 9.94 | 10.44 | N/A | N/A | N/A | N/A | N/A | N/A | N/A | N/A | N/A |
| 230 | N/A | N/A | N/A | 13.55 | 10.44 | 10.94 | N/A | N/A | N/A | N/A | N/A | N/A | N/A | N/A | N/A |
| 232 | N/A | N/A | N/A | 13.74 | 10.63 | 11.13 | N/A | N/A | N/A | N/A | N/A | N/A | N/A | N/A | N/A |
| 242 | N/A | N/A | N/A | N/A | N/A | N/A | 20.66 | 14.46 | 14.97 | 20.66 | 14.46 | 14.97 | 21.22 | 14.86 | 15.53 |
| 252 | N/A | N/A | N/A | N/A | N/A | N/A | 22.06 | 15.86 | 16.37 | 22.06 | 15.86 | 16.37 | 22.62 | 16.26 | 16.93 |
| 2600 | N/A | N/A | N/A | N/A | N/A | N/A | 22.78 | 16.58 | 17.09 | 22.78 | 16.58 | 17.09 | 23.34 | 16.98 | 17.65 |

*Note: All dimensions listed are for reference only. Contact factory for certified dimensions.*

WARNING *For safety, purchaser or user should provide protective guards over shaft extensions and any couplings, sheaves and belts, sprockets and chains, etc., mounted thereon.*

### NEMA Motor Mounting Dimensions

| Frame | AJ | AK | BD | OD | BE | BE1 | ME | ME1 | BORE | KWY.** | BF |
|---|---|---|---|---|---|---|---|---|---|---|---|
| 48CZ | 3.75 | 3.00 | 3.88 | 4.36 | .38 | N/A | .38 | N/A | .500 | 1/8 x 1/16 | .28 |
| 56C | 5.88 | 4.50 | 5.88 | 6.64 | .38 | N/A | .38 | N/A | .625 | 3/16 x 3/32 | .41 |
| 140TC | 5.88 | 4.50 | 5.88 | 6.64 | .38 | N/A | .38 | N/A | .875 | 3/16 x 3/32 | .41 |
| 180TC | 7.25 | 8.50 | 9.00 | 9.00 | N/A | .50 | N/A | .50 | 1.125 | 1/4 x 1/8 | .53 |
| 210TC | 7.25 | 8.50 | 9.00 | 9.00 | N/A | .50 | N/A | .50 | 1.375 | 5/16 x 5/32 | .53 |
| 250TC | 7.25 | 8.50 | 9.00 | 9.00 | N/A | .50 | N/A | .50 | 1.625 | 3/8 x 3/16 | .53 |

***keyway width by depth*

# Double Reduction

## Helical / Worm Dimensions

### Style DXV*(L or H)*

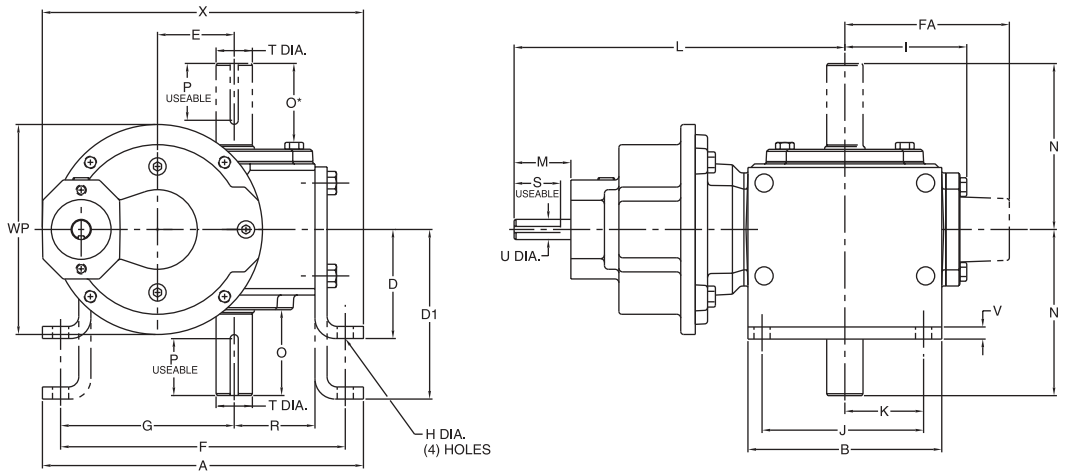


### Styles DXV*(L or H)*MQ & DXV*(L or H)*M

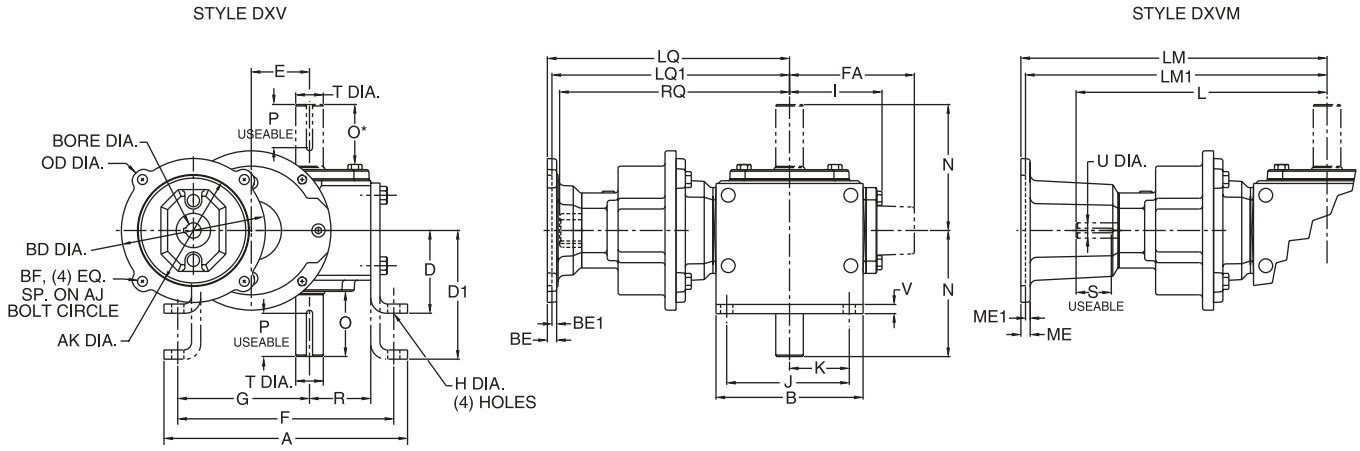


### Assemblies

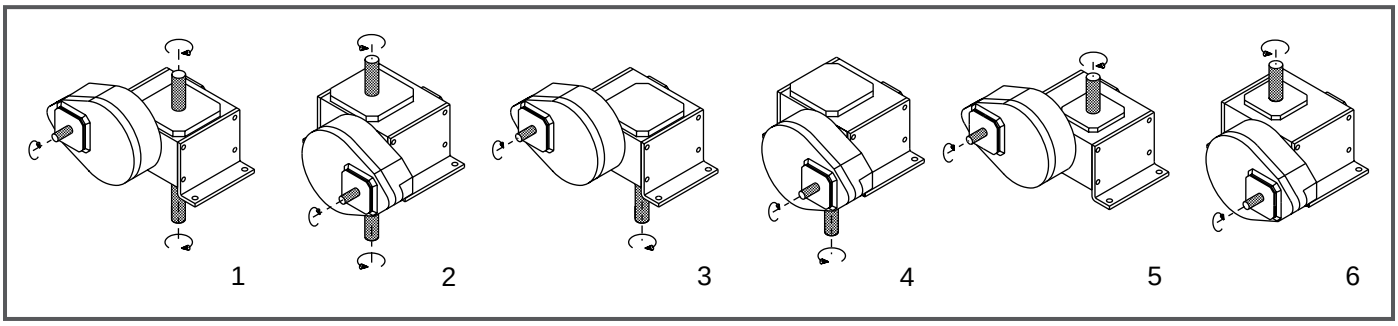


*Note: The input shaft may be rotated in either direction. Units are for mounting as shown. Contact factory for other mountings. Assembly positions also apply to motor flange units ("MQ" and "M").* ***See page 113 for additional assembly options.***

# Double Reduction

## Styles DXV*(L or H)*, DXV*(L or H)*MQ & DXV*(L or H)*M

| UNIT | A | B | D | D1 | E | F | FA | G | H | I | J | K | L | M | N | O | O* | P** |
|---|---|---|---|---|---|---|---|---|---|---|---|---|---|---|---|---|---|---|
| 213 | 7.26 | 4.00 | 2.63 | 3.56 | 1.333 | 6.50 | N/A | 3.86 | .38 | 2.61 | 3.00 | 1.50 | N/A | N/A | 4.00 | 2.16 | 1.94 | 3/16 x 1.50 |
| 215 | 7.88 | 5.00 | 3.00 | 4.38 | 1.540 | 7.00 | N/A | 4.28 | .44 | 3.14 | 4.00 | 2.00 | N/A | N/A | 4.31 | 2.11 | 1.90 | 3/16 x 1.50 |
| 218 | 8.25 | 5.00 | 3.00 | 4.38 | 1.750 | 7.37 | N/A | 4.50 | .44 | 3.24 | 4.00 | 2.00 | N/A | N/A | 4.31 | 2.05 | 1.84 | 3/16 x 1.38 |
| 220 | 9.38 | 6.00 | 3.13 | 4.88 | 2.063 | 8.38 | N/A | 5.09 | .50 | 3.61 | 4.88 | 2.44 | N/A | N/A | 4.68 | 2.29 | 2.08 | 1/4 x 1.44 |
| 224 | 9.94 | 6.00 | 3.38 | 5.25 | 2.375 | 8.81 | N/A | 5.38 | .50 | 3.77 | 4.88 | 2.44 | 10.24 | 1.76 | 5.14 | 2.66 | 2.44 | 1/4 x 1.75 |
| 226 | 11.24 | 7.00 | 3.63 | 5.56 | 2.625 | 10.12 | N/A | 6.12 | .56 | 4.34 | 5.75 | 2.88 | 10.80 | 1.76 | 5.63 | 2.73 | 2.52 | 1/4 x 2.00 |
| 230 | 12.50 | 8.00 | 3.94 | 5.88 | 3.000 | 11.13 | N/A | 6.75 | .56 | 4.84 | 6.00 | 3.00 | 11.30 | 1.76 | 6.75 | 3.60 | 3.36 | 1/4 x 2.25 |
| 232 | 13.00 | 8.50 | 4.69 | 6.25 | 3.250 | 11.88 | N/A | 7.13 | .56 | 5.02 | 6.13 | 3.06 | 11.49 | 1.76 | 7.06 | 3.66 | 3.42 | 3/8 x 2.62 |
| 242 | 16.26 | 10.00 | 5.00 | 7.50 | 4.250 | 14.88 | N/A | 8.69 | .69 | 6.10 | 7.88 | 3.94 | 17.48 | 3.61 | 8.12 | 4.50 | 4.21 | 1/2 x 3.06 |
| 252 | 19.62 | 13.00 | 5.16 | 9.16 | 5.250 | 18.00 | N/A | 10.88 | .78 | 7.50 | 10.00 | 5.00 | 18.88 | 3.61 | 9.06 | 4.78 | 4.53 | 1/2 x 3.50 |
| 2600 | 23.26 | 14.75 | 7.31 | 9.63 | 6.000 | 20.88 | 10.24 | 12.19 | .91 | N/A | 11.76 | 5.88 | 19.60 | 3.61 | 10.00 | 4.66 | 4.66 | 5/8 x 4.00 |
| 2700 | 26.91 | 14.88 | 7.00 | N/A | 7.000 | 23.99 | 10.63 | 13.87 | 1.13 | N/A | 12.50 | 6.25 | 19.68 | 2.50 | 11.76 | 5.69 | 5.69 | 5/8 x 4.00 |
| 2800 | 28.96 | 17.00 | 8.00 | N/A | 8.000 | 25.50 | 11.93 | 14.38 | 1.13 | N/A | 14.00 | 7.00 | 21.30 | 3.00 | 12.25 | 6.02 | 6.02 | 3/4 x 4.50 |
| 21000 | 37.47 | 20.88 | 9.00 | N/A | 10.000 | 30.75 | 14.34 | 17.76 | 1.44 | N/A | 17.75 | 8.88 | 25.78 | 3.50 | 14.75 | 6.80 | 6.80 | 7/8 x 5.00 |

| UNIT | R | S** | T Dia. | U Dia. | V | WP | X |
|---|---|---|---|---|---|---|---|
| 213 | 1.72 | N/A | .625 | N/A | .25 | 5.00 | 7.46 |
| 215 | 1.91 | N/A | .750 | N/A | .25 | 5.00 | 7.81 |
| 218 | 2.06 | N/A | .875 | N/A | .25 | 5.00 | 8.17 |
| 220 | 2.28 | N/A | 1.000 | N/A | .38 | 5.00 | 8.95 |
| 224 | 2.50 | 3/16 x 1.44 | 1.125 | .625 | .38 | 6.50 | 9.95 |
| 226 | 2.94 | 3/16 x 1.44 | 1.250 | .625 | .38 | 6.50 | 10.75 |
| 230 | 3.25 | 3/16 x 1.44 | 1.250 | .625 | .38 | 6.50 | 11.63 |
| 232 | 3.50 | 3/16 x 1.44 | 1.500 | .625 | .38 | 6.50 | 12.13 |
| 242 | 4.44 | 1/4 x 2.17 | 1.875 | 1.250 | .50 | 8.50 | 15.75 |
| 252 | 5.12 | 1/4 x 2.17 | 2.000 | 1.250 | .50 | 8.50 | 17.80 |
| 2600 | 6.50 | 1/4 x 2.17 | 2.500 | 1.250 | .50 | 8.50 | 20.50 |
| 2700 | 7.59 | 1/4 x 2.25 | 2.750 | 1.125 | .75 | 10.36 | 25.84 |
| 2800 | 8.86 | 5/16 x 2.75 | 3.000 | 1.375 | .75 | 11.64 | 29.93 |
| 21000 | 10.36 | 3/8 x 3.25 | 3.750 | 1.500 | 1.00 | 13.85 | 37.35 |

**applies to double output shaft - all sizes, and single output shaft - sizes 242 and larger*
***keyway width by length*

*Note: Sizes 2700 through 21000 have an input shaft which is not aligned with the centerline of the gearbox.*

*Contact factory for further dimension details.*

*Note: All dimensions listed are for reference only. Contact factory for certified dimensions.*

WARNING *For safety, purchaser or user should provide protective guards over shaft extensions and any couplings, sheaves and belts, sprockets and chains, etc., mounted thereon.*

## NEMA Motor Data

### NEMA Motor Flange Face Locations

| | 48CZ | | | 56C/140TC | | | 180TC | | | 210TC | | | 250TC | | |
|---|---|---|---|---|---|---|---|---|---|---|---|---|---|---|---|
| UNIT | LM | RQ | LQ | LM | RQ | LQ | LM1 | RQ | LQ1 | LM1 | RQ | LQ1 | LM! | RQ | LQ1 |
| 213 | N/A | 7.79 | 8.29 | N/A | 7.79 | 8.29 | N/A | N/A | N/A | N/A | N/A | N/A | N/A | N/A | N/A |
| 215 | N/A | 8.32 | 8.82 | N/A | 8.32 | 8.82 | N/A | N/A | N/A | N/A | N/A | N/A | N/A | N/A | N/A |
| 218 | N/A | 8.42 | 8.92 | N/A | 8.42 | 8.92 | N/A | N/A | N/A | N/A | N/A | N/A | N/A | N/A | N/A |
| 220 | N/A | 8.79 | 9.29 | N/A | 8.79 | 9.29 | N/A | N/A | N/A | N/A | N/A | N/A | N/A | N/A | N/A |
| 224 | N/A | N/A | N/A | 12.49 | 9.38 | 9.88 | N/A | N/A | N/A | N/A | N/A | N/A | N/A | N/A | N/A |
| 226 | N/A | N/A | N/A | 13.05 | 9.94 | 10.44 | N/A | N/A | N/A | N/A | N/A | N/A | N/A | N/A | N/A |
| 230 | N/A | N/A | N/A | 13.55 | 10.44 | 10.94 | N/A | N/A | N/A | N/A | N/A | N/A | N/A | N/A | N/A |
| 232 | N/A | N/A | N/A | 13.74 | 10.63 | 11.13 | N/A | N/A | N/A | N/A | N/A | N/A | N/A | N/A | N/A |
| 242 | N/A | N/A | N/A | N/A | N/A | N/A | 20.66 | 14.46 | 14.97 | 20.66 | 14.46 | 14.97 | 21.22 | 14.86 | 15.53 |
| 252 | N/A | N/A | N/A | N/A | N/A | N/A | 22.06 | 15.86 | 16.37 | 22.06 | 15.86 | 16.37 | 22.62 | 16.26 | 16.93 |
| 2600 | N/A | N/A | N/A | N/A | N/A | N/A | 22.78 | 16.58 | 17.09 | 22.78 | 16.58 | 17.09 | 23.34 | 16.98 | 17.65 |

### NEMA Motor Mounting Dimensions

| Frame | AJ | AK | BD | OD | BE | BE1 | ME | ME1 | BORE | KWY.** | BF |
|---|---|---|---|---|---|---|---|---|---|---|---|
| 48CZ | 3.75 | 3.00 | 3.88 | 4.36 | .38 | N/A | .38 | N/A | .500 | 1/8 x 1/16 | .28 |
| 56C | 5.88 | 4.50 | 5.88 | 6.64 | .38 | N/A | .38 | N/A | .625 | 3/16 x 3/32 | .41 |
| 140TC | 5.88 | 4.50 | 5.88 | 6.64 | .38 | N/A | .38 | N/A | .875 | 3/16 x 3/32 | .41 |
| 180TC | 7.25 | 8.50 | 9.00 | 9.00 | N/A | .50 | N/A | .50 | 1.125 | 1/4 x 1/8 | .53 |
| 210TC | 7.25 | 8.50 | 9.00 | 9.00 | N/A | .50 | N/A | .50 | 1.375 | 5/16 x 5/32 | .53 |
| 250TC | 7.25 | 8.50 | 9.00 | 9.00 | N/A | .50 | N/A | .50 | 1.625 | 3/8 x 3/16 | .53 |

***keyway width by depth*

# Double Reduction

## Helical / Worm Dimensions

### Style DXJ

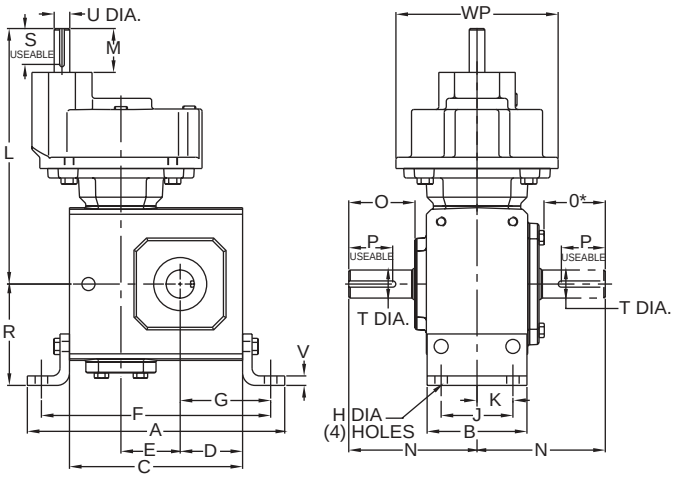


### Styles DXJMQ & DXJM

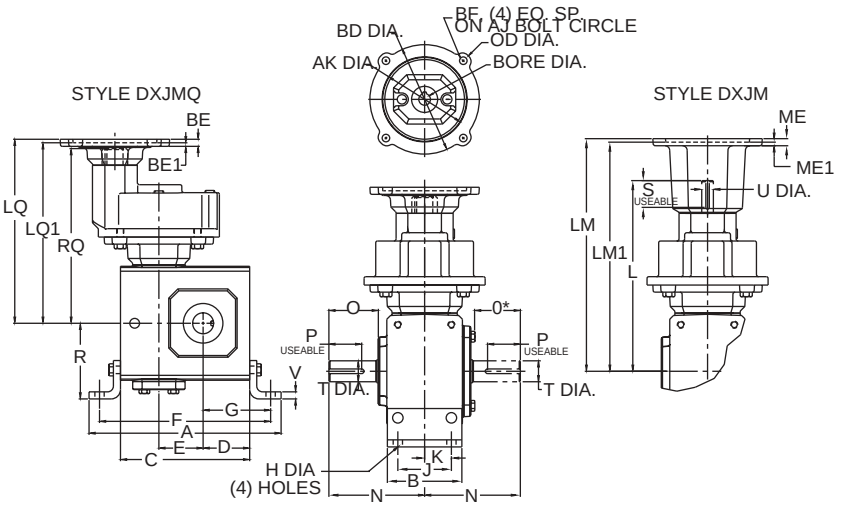


### Assemblies

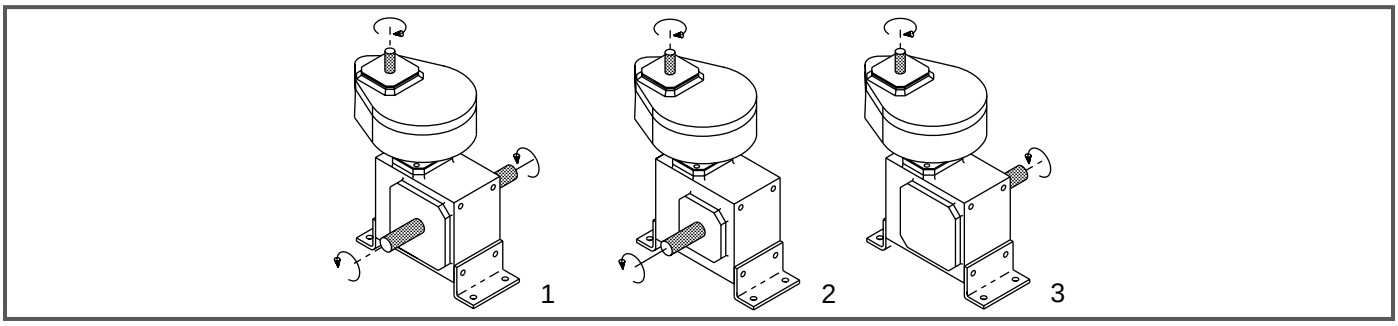


*Note: The input shaft may be rotated in either direction. Units are for mounting as shown. Contact factory for other mountings. Assembly positions also apply to motor flange units ("MQ" and "M").* ***See page 112 for additional assembly options.***

# Double Reduction

## Styles DXJ, DXJMQ & DXJM

| UNIT | A | B | C | D | E | F | G | H Dia. | J | K | L | M | N | O | O* | P** | R | S** |
|---|---|---|---|---|---|---|---|---|---|---|---|---|---|---|---|---|---|---|
| 213 | 7.42 | 2.75 | 4.66 | 1.72 | 1.333 | 6.42 | 2.60 | .38 | 2.00 | 1.00 | N/A | N/A | 4.00 | 2.16 | 1.94 | 3/16 x 1.50 | 2.94 | N/A |
| 215 | 8.14 | 3.50 | 5.38 | 1.91 | 1.540 | 7.08 | 2.76 | .44 | 2.75 | 1.38 | N/A | N/A | 4.31 | 2.11 | 1.90 | 3/16 x 1.50 | 3.50 | N/A |
| 218 | 8.51 | 3.50 | 5.75 | 2.06 | 1.750 | 7.45 | 2.91 | .44 | 2.75 | 1.38 | N/A | N/A | 4.31 | 2.05 | 1.84 | 3/16 x 1.38 | 3.50 | N/A |
| 220 | 9.76 | 4.00 | 6.38 | 2.28 | 2.063 | 8.62 | 3.40 | .50 | 2.75 | 1.38 | N/A | N/A | 4.68 | 2.29 | 2.08 | 1/4 x 1.44 | 4.01 | N/A |
| 224 | 10.31 | 4.00 | 6.94 | 2.50 | 2.375 | 9.19 | 3.63 | .50 | 2.88 | 1.44 | 10.24 | 1.76 | 5.14 | 2.66 | 2.44 | 1/4 x 1.75 | 4.06 | 3/16 x 1.44 |
| 226 | 11.62 | 5.00 | 8.00 | 2.94 | 2.625 | 10.38 | 4.13 | .56 | 3.38 | 1.69 | 10.80 | 1.76 | 5.63 | 2.73 | 2.52 | 1/4 x 2.00 | 5.00 | 3/16 x 1.44 |
| 230 | 12.64 | 6.00 | 8.88 | 3.25 | 3.000 | 11.38 | 4.50 | .56 | 3.88 | 1.94 | 11.30 | 1.76 | 6.75 | 3.60 | 3.36 | 1/4 x 2.25 | 5.62 | 3/16 x 1.44 |
| 232 | 13.14 | 6.00 | 9.38 | 3.50 | 3.250 | 11.88 | 4.75 | .56 | 3.88 | 1.94 | 11.49 | 1.76 | 7.06 | 3.66 | 3.42 | 3/8 x 2.62 | 5.63 | 3/16 x 1.44 |
| 242 | 16.38 | 7.00 | 11.38 | 4.44 | 4.250 | 14.88 | 6.19 | .69 | 5.00 | 2.50 | 17.48 | 3.61 | 8.12 | 4.50 | 4.21 | 1/2 x 3.06 | 6.50 | 1/4 x 2.17 |
| 252 | 19.00 | 7.00 | 14.00 | 5.12 | 5.250 | 17.50 | 6.87 | .69 | 5.81 | 2.91 | 18.88 | 3.61 | 9.06 | 4.78 | 4.53 | 1/2 x 3.50 | 7.75 | 1/4 x 2.17 |

| UNIT | T Dia. | U Dia. | V | WP |
|---|---|---|---|---|
| 213 | .625 | N/A | .25 | 5.00 |
| 215 | .750 | N/A | .25 | 5.00 |
| 218 | .875 | N/A | .25 | 5.00 |
| 220 | 1.000 | N/A | .38 | 5.00 |
| 224 | 1.125 | .625 | .38 | 6.50 |
| 226 | 1.250 | .625 | .38 | 6.50 |
| 230 | 1.250 | .625 | .38 | 6.50 |
| 232 | 1.500 | .625 | .38 | 6.50 |
| 242 | 1.875 | 1.250 | .50 | 8.50 |
| 252 | 2.000 | 1.250 | .50 | 8.50 |

**applies to double output shaft*
***keyway width by length*

## NEMA Motor Data

### NEMA Motor Flange Face Locations

| | 48CZ | | | 56C/140TC | | | 180TC | | | 210TC | | | 250TC | | |
|---|---|---|---|---|---|---|---|---|---|---|---|---|---|---|---|
| UNIT | LM | RQ | LQ | LM | RQ | LQ | LM1 | RQ | LQ1 | LM1 | RQ | LQ1 | LM! | RQ | LQ1 |
| 213 | N/A | 7.79 | 8.29 | N/A | 7.79 | 8.29 | N/A | N/A | N/A | N/A | N/A | N/A | N/A | N/A | N/A |
| 215 | N/A | 8.32 | 8.82 | N/A | 8.32 | 8.82 | N/A | N/A | N/A | N/A | N/A | N/A | N/A | N/A | N/A |
| 218 | N/A | 8.42 | 8.92 | N/A | 8.42 | 8.92 | N/A | N/A | N/A | N/A | N/A | N/A | N/A | N/A | N/A |
| 220 | N/A | 8.79 | 9.29 | N/A | 8.79 | 9.29 | N/A | N/A | N/A | N/A | N/A | N/A | N/A | N/A | N/A |
| 224 | N/A | N/A | N/A | 12.49 | 9.38 | 9.88 | N/A | N/A | N/A | N/A | N/A | N/A | N/A | N/A | N/A |
| 226 | N/A | N/A | N/A | 13.05 | 9.94 | 10.44 | N/A | N/A | N/A | N/A | N/A | N/A | N/A | N/A | N/A |
| 230 | N/A | N/A | N/A | 13.55 | 10.44 | 10.94 | N/A | N/A | N/A | N/A | N/A | N/A | N/A | N/A | N/A |
| 232 | N/A | N/A | N/A | 13.74 | 10.63 | 11.13 | N/A | N/A | N/A | N/A | N/A | N/A | N/A | N/A | N/A |
| 242 | N/A | N/A | N/A | N/A | N/A | N/A | 20.66 | 14.46 | 14.97 | 20.66 | 14.46 | 14.97 | 21.22 | 14.86 | 15.53 |
| 252 | N/A | N/A | N/A | N/A | N/A | N/A | 22.06 | 15.86 | 16.37 | 22.06 | 15.86 | 16.37 | 22.62 | 16.26 | 16.93 |
| 2600 | N/A | N/A | N/A | N/A | N/A | N/A | 22.78 | 16.58 | 17.09 | 22.78 | 16.58 | 17.09 | 23.34 | 16.98 | 17.65 |

### NEMA Motor Mounting Dimensions

| Frame | AJ | AK | BD | OD | BE | BE1 | ME | ME1 | BORE | KWY.** | BF |
|---|---|---|---|---|---|---|---|---|---|---|---|
| 48CZ | 3.75 | 3.00 | 3.88 | 4.36 | .38 | N/A | .38 | N/A | .500 | 1/8 x 1/16 | .28 |
| 56C | 5.88 | 4.50 | 5.88 | 6.64 | .38 | N/A | .38 | N/A | .625 | 3/16 x 3/32 | .41 |
| 140TC | 5.88 | 4.50 | 5.88 | 6.64 | .38 | N/A | .38 | N/A | .875 | 3/16 x 3/32 | .41 |
| 180TC | 7.25 | 8.50 | 9.00 | 9.00 | N/A | .50 | N/A | .50 | 1.125 | 1/4 x 1/8 | .53 |
| 210TC | 7.25 | 8.50 | 9.00 | 9.00 | N/A | .50 | N/A | .50 | 1.375 | 5/16 x 5/32 | .53 |
| 250TC | 7.25 | 8.50 | 9.00 | 9.00 | N/A | .50 | N/A | .50 | 1.625 | 3/8 x 3/16 | .53 |

***keyway width by depth*

*Note: All dimensions listed are for reference only. Contact factory for certified dimensions.*

WARNING *For safety, purchaser or user should provide protective guards over shaft extensions and any couplings, sheaves and belts, sprockets and chains, etc., mounted thereon.*

# Double Reduction

## Helical / Worm Dimensions

### Style DXF

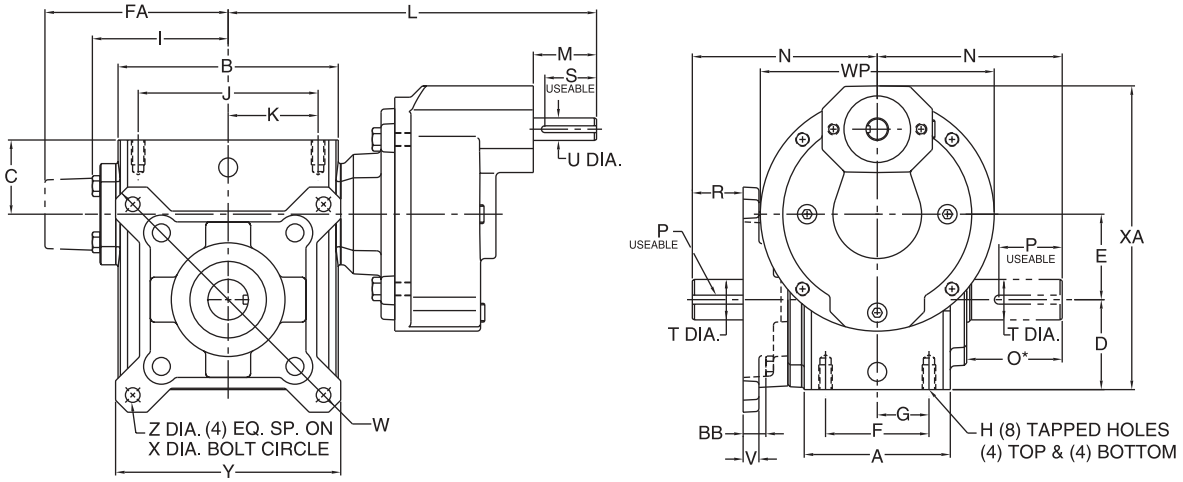


### Styles DXFMQ & DXFM

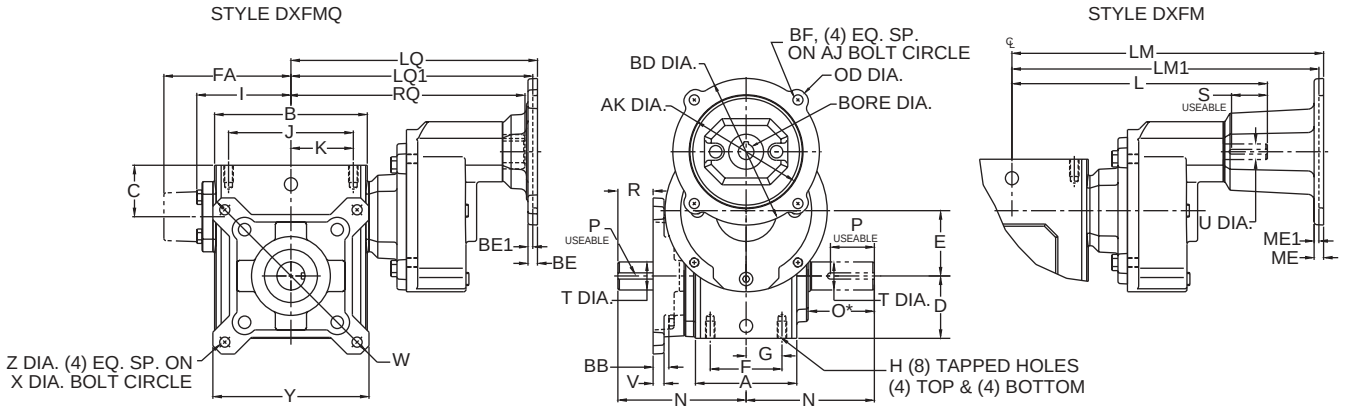


### Assemblies

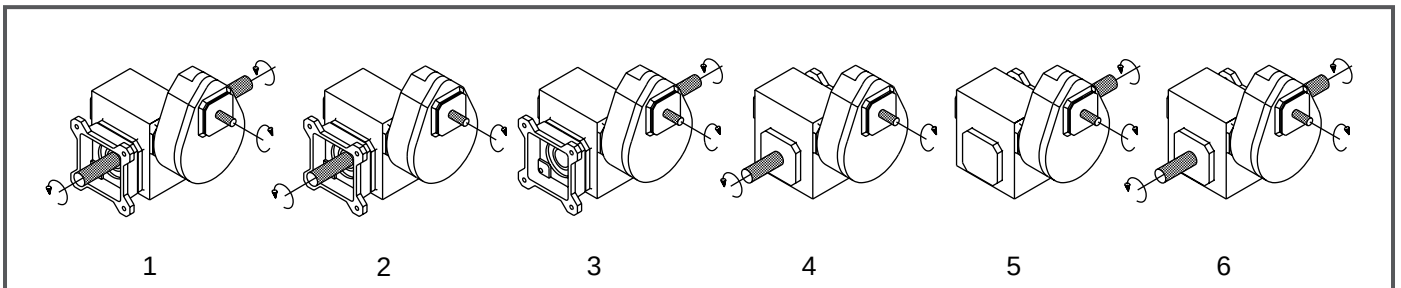


*Note: The input shaft may be rotated in either direction. Units are for mounting as shown. Contact factory for other mountings. Assembly positions also apply to motor flange units ("MQ" and "M").* ***See page 114 for additional assembly options.***

# Double Reduction

## Styles DXF, DXFMQ & DXFM

| UNIT | A | B | BB | C | D | E | F | FA | G | H | H Depth | I | J | K | L | M | N | O* | P** |
|---|---|---|---|---|---|---|---|---|---|---|---|---|---|---|---|---|---|---|---|
| 213 | 2.82 | 3.80 | .08 | 1.61 | 1.72 | 1.333 | 2.00 | N/A | 1.00 | 5/16-18 | .50 | 2.61 | 3.25 | 1.63 | N/A | N/A | 4.00 | 2.16 | 3/16 x 1.50 |
| 215 | 3.44 | 4.88 | .08 | 1.93 | 1.91 | 1.540 | 2.75 | N/A | 1.38 | 5/16-18 | .63 | 3.14 | 4.19 | 2.09 | N/A | N/A | 4.31 | 2.11 | 3/16 x 1.50 |
| 218 | 3.56 | 5.06 | .11 | 1.94 | 2.06 | 1.750 | 2.75 | N/A | 1.38 | 5/16-18 | .63 | 3.24 | 4.19 | 2.09 | N/A | N/A | 4.31 | 2.05 | 3/16 x 1.38 |
| 220 | 3.81 | 5.80 | .55 | 2.03 | 2.28 | 2.063 | 3.00 | N/A | 1.50 | 5/16-18 | .63 | 3.61 | 4.75 | 2.38 | N/A | N/A | 4.68 | 2.29 | 1/4 x 1.44 |
| 224 | 4.06 | 6.12 | .51 | 2.06 | 2.50 | 2.375 | 2.88 | N/A | 1.44 | 3/8-16 | .69 | 3.77 | 5.00 | 2.50 | 10.24 | 1.76 | 5.14 | 2.66 | 1/4 x 1.75 |
| 226 | 4.84 | 7.12 | .04 | 2.44 | 2.94 | 2.625 | 3.38 | N/A | 1.69 | 3/8-16 | .69 | 4.34 | 6.38 | 3.19 | 10.80 | 1.76 | 5.63 | 2.73 | 1/4 x 2.00 |
| 230 | 5.25 | 8.12 | .07 | 2.63 | 3.25 | 3.000 | 4.00 | N/A | 2.00 | 7/16-14 | .88 | 4.84 | 7.00 | 3.50 | 11.30 | 1.76 | 6.75 | 3.60 | 1/4 x 2.25 |
| 232 | 5.75 | 8.50 | .07 | 2.63 | 3.50 | 3.250 | 4.00 | N/A | 2.00 | 7/16-14 | .88 | 5.02 | 7.50 | 3.75 | 11.49 | 1.76 | 7.06 | 3.66 | 3/8 x 2.62 |
| 242 | 6.13 | 10.25 | .06 | 2.69 | 4.44 | 4.250 | 5.00 | N/A | 2.50 | 5/8-11 | 1.00 | 6.10 | 8.50 | 4.25 | 17.48 | 3.61 | 8.12 | 4.50 | 1/2 x 3.06 |
| 252 | 7.19 | 13.00 | .34 | 3.63 | 5.12 | 5.250 | 5.81 | N/A | 2.91 | 5/8-11 | 1.25 | 7.50 | 11.00 | 5.50 | 18.88 | 3.61 | 9.06 | 4.78 | 1/2 x 3.50 |
| 2600 | 8.13 | 14.25 | 1.38 | 4.00 | 6.50 | 6.000 | 6.38 | 11.13 | 3.19 | 5/8-11 | 1.00 | N/A | 12.75 | 6.38 | 19.60 | 3.61 | 10.00 | 4.66 | 5/8 x 4.00 |
| 2700 | 7.63 | 14.88 | 1.57 | 4.33 | 7.59 | 7.000 | 5.50 | 11.37 | 2.75 | 1-8 | 1.56 | N/A | 12.50 | 6.25 | 19.68 | 2.50 | 11.76 | 5.69 | 5/8 x 4.00 |
| 2800 | 8.63 | 17.00 | 1.89 | 4.11 | 8.86 | 8.000 | 6.50 | 12.52 | 3.25 | 1-8 | 1.66 | N/A | 14.25 | 7.13 | 21.30 | 3.00 | 12.25 | 6.02 | 3/4 x 4.50 |
| 21000 | 9.53 | 20.88 | 1.85 | 5.12 | 10.36 | 10.000 | 6.88 | 14.69 | 3.44 | 1 1/4-7 | 2.04 | N/A | 17.75 | 8.88 | 25.78 | 3.50 | 14.75 | 6.80 | 7/8 x 5.00 |

| UNIT | R | S** | T Dia. | U Dia. | V | W | WP | X Dia. | XA | Y | Z Dia. |
|---|---|---|---|---|---|---|---|---|---|---|---|
| 213 | 1.48 | N/A | .625 | N/A | .38 | 5.92 | 5.00 | 5.00 | 6.16 | 4.50 | .34 |
| 215 | 1.44 | N/A | .750 | N/A | .38 | 5.92 | 5.00 | 5.00 | 6.56 | 4.50 | .34 |
| 218 | 1.13 | N/A | .875 | N/A | .38 | 6.64 | 5.00 | 5.88 | 6.92 | 5.00 | .34 |
| 220 | .99 | N/A | 1.000 | N/A | .44 | 7.88 | 5.00 | 7.00 | 7.45 | 5.99 | .41 |
| 224 | 1.47 | 3/16 x 1.44 | 1.125 | .625 | .44 | 8.39 | 6.50 | 7.50 | 8.45 | 6.27 | .41 |
| 226 | 1.99 | 3/16 x 1.44 | 1.250 | .625 | .50 | 8.88 | 6.50 | 8.00 | 9.13 | 6.67 | .41 |
| 230 | 3.03 | 3/16 x 1.44 | 1.250 | .625 | .50 | 9.89 | 6.50 | 9.00 | 9.82 | 7.37 | .41 |
| 232 | 3.08 | 3/16 x 1.44 | 1.500 | .625 | .50 | 9.89 | 6.50 | 9.00 | 10.32 | 7.37 | .41 |
| 242 | 3.62 | 1/4 x 2.17 | 1.875 | 1.250 | .62 | 12.95 | 8.50 | 11.50 | 13.31 | 9.65 | .56 |
| 252 | 3.50 | 1/4 x 2.17 | 2.000 | 1.250 | .75 | 15.50 | 8.50 | 14.00 | 14.99 | 11.75 | .69 |
| 2600 | 2.78 | 1/4 x 2.17 | 2.500 | 1.250 | .75 | 18.00 | 8.50 | 15.63 | 17.12 | 14.00 | .69 |
| 2700 | 4.32 | 1/4 x 2.25 | 2.750 | 1.125 | .75 | 21.00 | 10.36 | 18.38 | 21.84 | 15.63 | .78 |
| 2800 | 3.92 | 5/16 x 2.75 | 3.000 | 1.375 | .75 | 24.00 | 11.64 | 21.00 | 25.93 | 17.88 | 1.03 |
| 21000 | 5.70 | 3/8 x 3.25 | 3.750 | 1.500 | 1.00 | 29.00 | 13.85 | 25.00 | 31.35 | 21.19 | 1.03 |

**applies to double output shaft*
***keyway width by length*

*Note: Sizes 2700 through 21000 have an input shaft which is not aligned with the centerline of the gearbox.*

*Contact factory for further dimension details.*

*Note: All dimensions listed are for reference only. Contact factory for certified dimensions.*

WARNING *For safety, purchaser or user should provide protective guards over shaft extensions and any couplings, sheaves and belts, sprockets and chains, etc., mounted thereon.*

## NEMA Motor Data

### NEMA Motor Flange Face Locations

| | 48CZ | | | 56C/140TC | | | 180TC | | | 210TC | | | 250TC | | |
|---|---|---|---|---|---|---|---|---|---|---|---|---|---|---|---|
| UNIT | LM | RQ | LQ | LM | RQ | LQ | LM1 | RQ | LQ1 | LM1 | RQ | LQ1 | LM! | RQ | LQ1 |
| 213 | N/A | 7.79 | 8.29 | N/A | 7.79 | 8.29 | N/A | N/A | N/A | N/A | N/A | N/A | N/A | N/A | N/A |
| 215 | N/A | 8.32 | 8.82 | N/A | 8.32 | 8.82 | N/A | N/A | N/A | N/A | N/A | N/A | N/A | N/A | N/A |
| 218 | N/A | 8.42 | 8.92 | N/A | 8.42 | 8.92 | N/A | N/A | N/A | N/A | N/A | N/A | N/A | N/A | N/A |
| 220 | N/A | 8.79 | 9.29 | N/A | 8.79 | 9.29 | N/A | N/A | N/A | N/A | N/A | N/A | N/A | N/A | N/A |
| 224 | N/A | N/A | N/A | 12.49 | 9.38 | 9.88 | N/A | N/A | N/A | N/A | N/A | N/A | N/A | N/A | N/A |
| 226 | N/A | N/A | N/A | 13.05 | 9.94 | 10.44 | N/A | N/A | N/A | N/A | N/A | N/A | N/A | N/A | N/A |
| 230 | N/A | N/A | N/A | 13.55 | 10.44 | 10.94 | N/A | N/A | N/A | N/A | N/A | N/A | N/A | N/A | N/A |
| 232 | N/A | N/A | N/A | 13.74 | 10.63 | 11.13 | N/A | N/A | N/A | N/A | N/A | N/A | N/A | N/A | N/A |
| 242 | N/A | N/A | N/A | N/A | N/A | N/A | 20.66 | 14.46 | 14.97 | 20.66 | 14.46 | 14.97 | 21.22 | 14.86 | 15.53 |
| 252 | N/A | N/A | N/A | N/A | N/A | N/A | 22.06 | 15.86 | 16.37 | 22.06 | 15.86 | 16.37 | 22.62 | 16.26 | 16.93 |
| 2600 | N/A | N/A | N/A | N/A | N/A | N/A | 22.78 | 16.58 | 17.09 | 22.78 | 16.58 | 17.09 | 23.34 | 16.98 | 17.65 |

### NEMA Motor Mounting Dimensions

| Frame | AJ | AK | BD | OD | BE | BE1 | ME | ME1 | BORE | KWY.** | BF |
|---|---|---|---|---|---|---|---|---|---|---|---|
| 48CZ | 3.75 | 3.00 | 3.88 | 4.36 | .38 | N/A | .38 | N/A | .500 | 1/8 x 1/16 | .28 |
| 56C | 5.88 | 4.50 | 5.88 | 6.64 | .38 | N/A | .38 | N/A | .625 | 3/16 x 3/32 | .41 |
| 140TC | 5.88 | 4.50 | 5.88 | 6.64 | .38 | N/A | .38 | N/A | .875 | 3/16 x 3/32 | .41 |
| 180TC | 7.25 | 8.50 | 9.00 | 9.00 | N/A | .50 | N/A | .50 | 1.125 | 1/4 x 1/8 | .53 |
| 210TC | 7.25 | 8.50 | 9.00 | 9.00 | N/A | .50 | N/A | .50 | 1.375 | 5/16 x 5/32 | .53 |
| 250TC | 7.25 | 8.50 | 9.00 | 9.00 | N/A | .50 | N/A | .50 | 1.625 | 3/8 x 3/16 | .53 |

***keyway width by depth*

# Double Reduction

## Helical / Worm Dimensions

### Style DXH

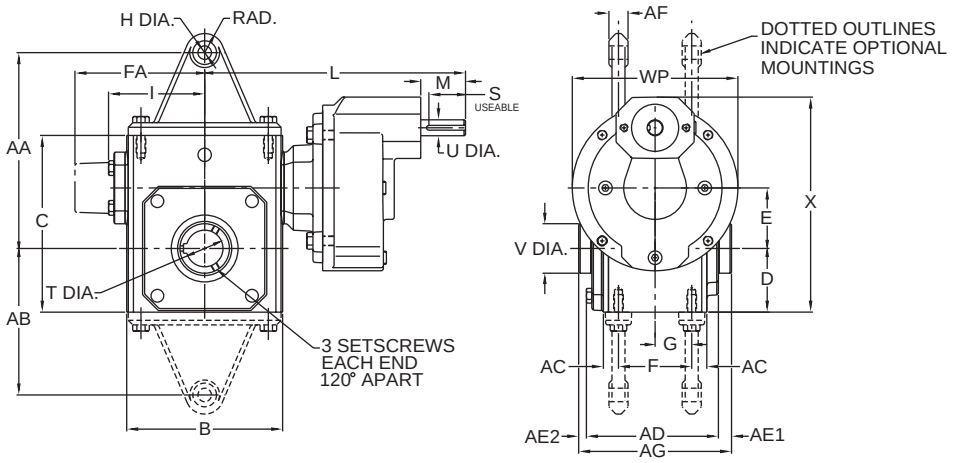


### Styles DXHMQ & DXHM

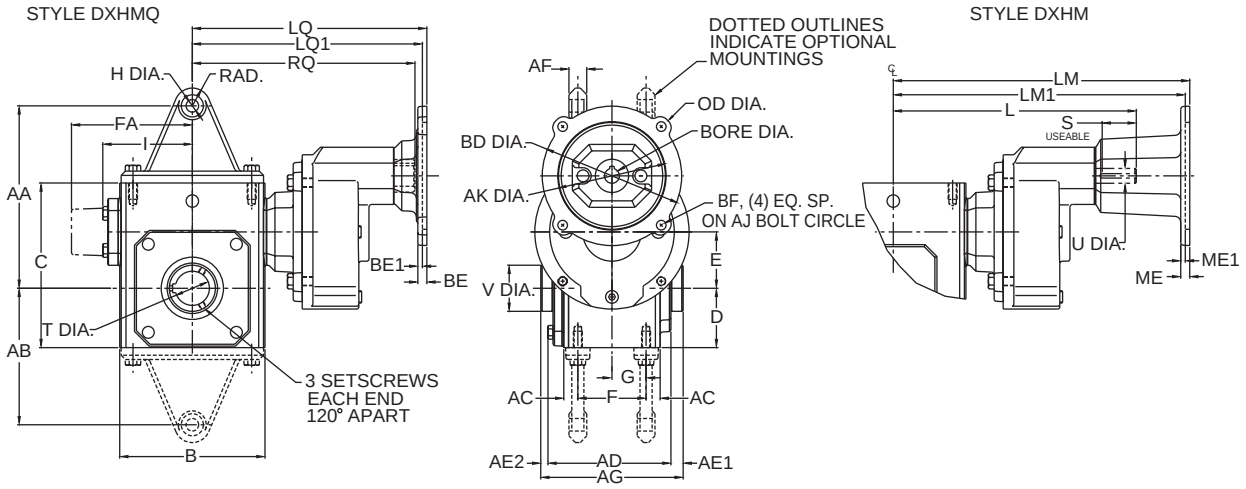


### Assemblies

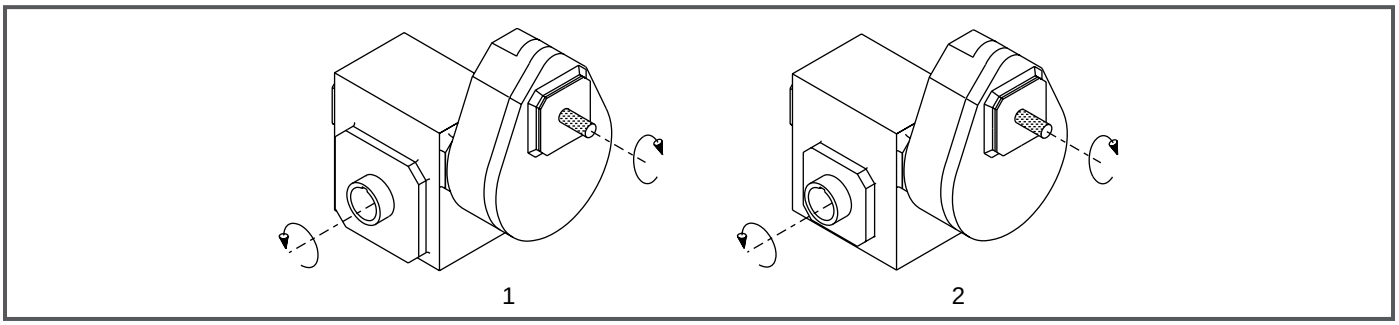


*Note: The input shaft may be rotated in either direction. Units are for mounting as shown. Contact factory for other mountings. Assembly positions also apply to motor flange units ("MQ" and "M").* ***See page 113 for additional assembly options.***

# Double Reduction

## Styles DXH, DXHMQ & DXHM

| UNIT | AA | AB | AC | AD | AE1 | AE2 | AF | AG | B | C | D | E | F | FA | G | H Dia. | I | L | M | RAD. |
|---|---|---|---|---|---|---|---|---|---|---|---|---|---|---|---|---|---|---|---|---|
| 213 | 4.19 | 2.97 | .41 | 3.90 | .53 | .32 | .25 | 4.75 | 3.80 | 4.66 | 1.72 | 1.333 | 2.00 | N/A | 1.00 | .53 | 2.61 | N/A | N/A | .50 |
| 215 | 5.97 | 4.41 | .35 | 4.61 | .51 | .30 | .75 | 5.42 | 5.19 | 5.38 | 1.91 | 1.540 | 2.75 | N/A | 1.38 | .53 | 3.14 | N/A | N/A | .75 |
| 218 | 6.19 | 4.56 | .41 | 4.73 | .49 | .28 | .75 | 5.50 | 5.19 | 5.75 | 2.06 | 1.750 | 2.75 | N/A | 1.38 | .53 | 3.24 | N/A | N/A | .75 |
| 220 | 7.24 | 5.43 | .41 | 4.99 | .61 | .40 | .75 | 6.00 | 5.80 | 6.38 | 2.28 | 2.063 | 3.00 | N/A | 1.50 | .53 | 3.61 | N/A | N/A | .75 |
| 224 | 7.69 | 5.75 | .59 | 5.18 | .51 | .31 | .75 | 6.00 | 6.12 | 6.94 | 2.50 | 2.375 | 2.88 | N/A | 1.44 | .53 | 3.77 | 10.24 | 1.76 | .75 |
| 226 | 8.81 | 6.69 | .73 | 6.01 | .60 | .39 | .75 | 7.00 | 7.38 | 8.00 | 2.94 | 2.625 | 3.38 | N/A | 1.69 | .53 | 4.34 | 10.80 | 1.76 | .75 |
| 230 | 10.63 | 8.25 | .63 | 6.53 | .60 | .36 | .75 | 7.50 | 8.12 | 8.88 | 3.25 | 3.000 | 4.00 | N/A | 2.00 | .53 | 4.84 | 11.30 | 1.76 | .88 |
| 232 | 10.88 | 8.50 | .88 | 7.04 | .54 | .29 | .75 | 7.88 | 8.75 | 9.38 | 3.50 | 3.250 | 4.00 | N/A | 2.00 | .53 | 5.02 | 11.49 | 1.76 | .88 |
| 242 | 11.94 | 9.44 | .56 | 7.53 | .63 | .34 | .75 | 8.50 | 10.25 | 11.38 | 4.44 | 4.250 | 5.00 | N/A | 2.50 | .53 | 6.10 | 17.48 | 3.61 | .75 |
| 252 | 13.88 | 10.12 | .69 | 8.85 | .97 | .68 | 1.00 | 10.50 | 13.00 | 14.00 | 5.12 | 5.250 | 5.81 | N/A | 2.91 | .66 | 7.50 | 18.88 | 3.61 | 1.00 |
| 2600 | 15.00 | 11.50 | .88 | 10.52 | .52 | .52 | .38 | 11.50 | 14.50 | 16.50 | 6.50 | 6.000 | 6.38 | 10.24 | 3.19 | .66 | N/A | 19.60 | 3.61 | .69 |
| 2700 | N/A | N/A | 1.06 | 11.36 | 1.09 | 1.09 | N/A | 13.50 | 14.88 | 18.91 | 7.59 | 7.000 | 5.50 | 10.63 | 2.75 | N/A | N/A | 19.68 | 2.50 | N/A |
| 2800 | N/A | N/A | 1.06 | 12.48 | 1.03 | 1.03 | N/A | 14.50 | 17.00 | 20.96 | 8.86 | 8.000 | 6.50 | 11.93 | 3.25 | N/A | N/A | 21.30 | 3.00 | N/A |
| 21000 | N/A | N/A | 1.33 | 15.78 | 1.39 | 1.39 | N/A | 18.50 | 20.88 | 25.47 | 10.36 | 10.000 | 6.88 | 14.34 | 3.44 | N/A | N/A | 25.78 | 3.50 | N/A |

| UNIT | S** | T-max* | T-kwy*** | U Dia. | V Dia. | WP | X |
|---|---|---|---|---|---|---|---|
| 213 | N/A | .625 | 3/16 x 3/32 | N/A | 1.00 | 5.00 | 6.16 |
| 215 | N/A | .625 | 3/16 x 3/32 | N/A | 1.00 | 5.00 | 6.56 |
| 218 | N/A | 1.000 | 1/4 x 1/8 | N/A | 1.44 | 5.00 | 6.92 |
| 220 | N/A | 1.438 | 3/8 x 3/16 | N/A | 1.94 | 5.00 | 7.45 |
| 224 | 3/16 x 1.44 | 1.438 | 3/8 x 3/16 | .625 | 1.94 | 6.50 | 8.45 |
| 226 | 3/16 x 1.44 | 1.438 | 3/8 x 3/16 | .625 | 1.94 | 6.50 | 9.13 |
| 230 | 3/16 x 1.44 | 1.938 | 1/2 x 1/4 | .625 | 2.51 | 6.50 | 9.82 |
| 232 | 3/16 x 1.44 | 1.938 | 1/2 x 1/4 | .625 | 2.51 | 6.50 | 10.32 |
| 242 | 1/4 x 2.17 | 2.188 | 1/2 x 1/4 | 1.250 | 2.75 | 8.50 | 13.31 |
| 252 | 1/4 x 2.17 | 3.438 | 7/8 x 7/16 | 1.250 | 4.26 | 8.50 | 14.99 |
| 2600 | 1/4 x 2.17 | 3.438 | 7/8 x 7/16 | 1.250 | 4.18 | 8.50 | 17.12 |
| 2700 | 1/4 x 2.25 | 3.938 | 1 x 1/2 | 1.125 | 4.92 | 10.36 | 21.84 |
| 2800 | 5/16 x 2.75 | 4.438 | 1 x 1/2 | 1.375 | 5.55 | 11.64 | 25.93 |
| 21000 | 3/8 x 3.25 | 5.438 | 1-1/4 x 5/8 | 1.500 | 6.67 | 13.85 | 31.35 |

** T dimensions are for max. bore diameter. For other bore diameters refer to catalog page 169.*

*** keyway width by length*
****keyway width by depth*

*Note: Sizes 2700 through 21000 have an input shaft which is not aligned with the centerline of the gearbox.*

*Contact factory for further dimension details.*

*Note: All dimensions listed are for reference only. Contact factory for certified dimensions.*

**WARNING** *For safety, purchaser or user should provide protective guards over shaft extensions and any couplings, sheaves and belts, sprockets and chains, etc., mounted thereon.*

## NEMA Motor Data

### NEMA Motor Flange Face Locations

| | 48CZ | | | 56C/140TC | | | 180TC | | | 210TC | | | 250TC | | |
|---|---|---|---|---|---|---|---|---|---|---|---|---|---|---|---|
| UNIT | LM | RQ | LQ | LM | RQ | LQ | LM1 | RQ | LQ1 | LM1 | RQ | LQ1 | LM! | RQ | LQ1 |
| 213 | N/A | 7.79 | 8.29 | N/A | 7.79 | 8.29 | N/A | N/A | N/A | N/A | N/A | N/A | N/A | N/A | N/A |
| 215 | N/A | 8.32 | 8.82 | N/A | 8.32 | 8.82 | N/A | N/A | N/A | N/A | N/A | N/A | N/A | N/A | N/A |
| 218 | N/A | 8.42 | 8.92 | N/A | 8.42 | 8.92 | N/A | N/A | N/A | N/A | N/A | N/A | N/A | N/A | N/A |
| 220 | N/A | 8.79 | 9.29 | N/A | 8.79 | 9.29 | N/A | N/A | N/A | N/A | N/A | N/A | N/A | N/A | N/A |
| 224 | N/A | N/A | N/A | 12.49 | 9.38 | 9.88 | N/A | N/A | N/A | N/A | N/A | N/A | N/A | N/A | N/A |
| 226 | N/A | N/A | N/A | 13.05 | 9.94 | 10.44 | N/A | N/A | N/A | N/A | N/A | N/A | N/A | N/A | N/A |
| 230 | N/A | N/A | N/A | 13.55 | 10.44 | 10.94 | N/A | N/A | N/A | N/A | N/A | N/A | N/A | N/A | N/A |
| 232 | N/A | N/A | N/A | 13.74 | 10.63 | 11.13 | N/A | N/A | N/A | N/A | N/A | N/A | N/A | N/A | N/A |
| 242 | N/A | N/A | N/A | N/A | N/A | N/A | 20.66 | 14.46 | 14.97 | 20.66 | 14.46 | 14.97 | 21.22 | 14.86 | 15.53 |
| 252 | N/A | N/A | N/A | N/A | N/A | N/A | 22.06 | 15.86 | 16.37 | 22.06 | 15.86 | 16.37 | 22.62 | 16.26 | 16.93 |
| 2600 | N/A | N/A | N/A | N/A | N/A | N/A | 22.78 | 16.58 | 17.09 | 22.78 | 16.58 | 17.09 | 23.34 | 16.98 | 17.65 |

### NEMA Motor Mounting Dimensions

| Frame | AJ | AK | BD | OD | BE | BE1 | ME | ME1 | BORE | KWY.** | BF |
|---|---|---|---|---|---|---|---|---|---|---|---|
| 48CZ | 3.75 | 3.00 | 3.88 | 4.36 | .38 | N/A | .38 | N/A | .500 | 1/8 x 1/16 | .28 |
| 56C | 5.88 | 4.50 | 5.88 | 6.64 | .38 | N/A | .38 | N/A | .625 | 3/16 x 3/32 | .41 |
| 140TC | 5.88 | 4.50 | 5.88 | 6.64 | .38 | N/A | .38 | N/A | .875 | 3/16 x 3/32 | .41 |
| 180TC | 7.25 | 8.50 | 9.00 | 9.00 | N/A | .50 | N/A | .50 | 1.125 | 1/4 x 1/8 | .53 |
| 210TC | 7.25 | 8.50 | 9.00 | 9.00 | N/A | .50 | N/A | .50 | 1.375 | 5/16 x 5/32 | .53 |
| 250TC | 7.25 | 8.50 | 9.00 | 9.00 | N/A | .50 | N/A | .50 | 1.625 | 3/8 x 3/16 | .53 |

***keyway width by depth*

# Double Reduction

## Helical / Worm Dimensions

### Style DXFH

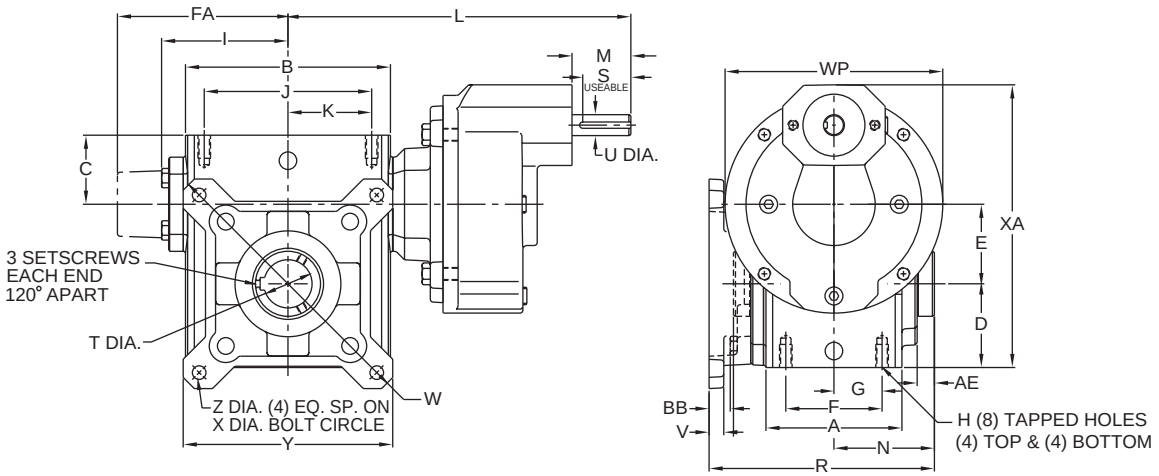


### Styles DXFHMQ & DXFHM

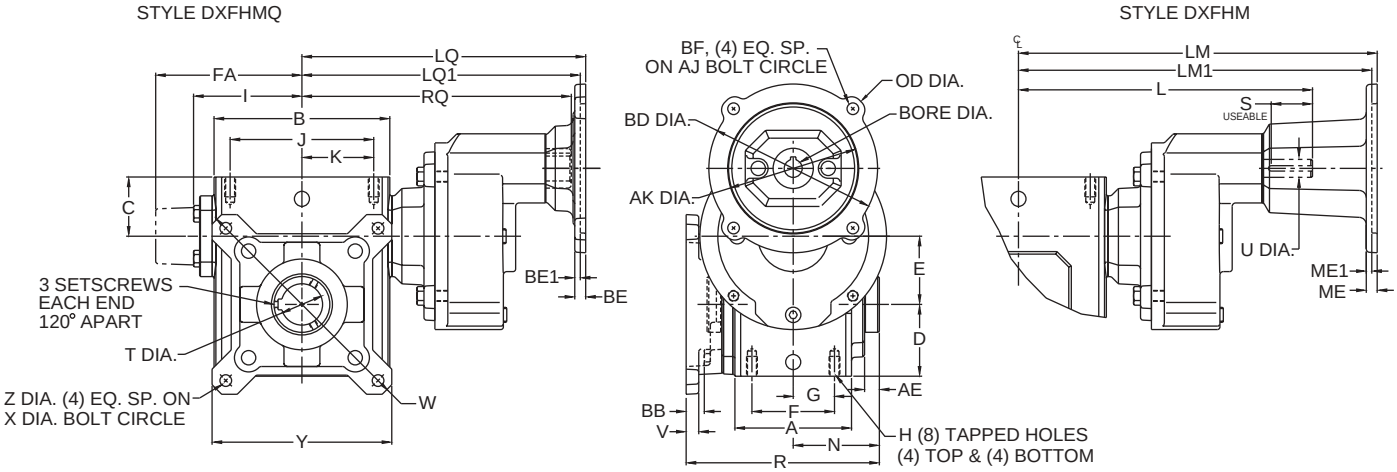


### Assemblies

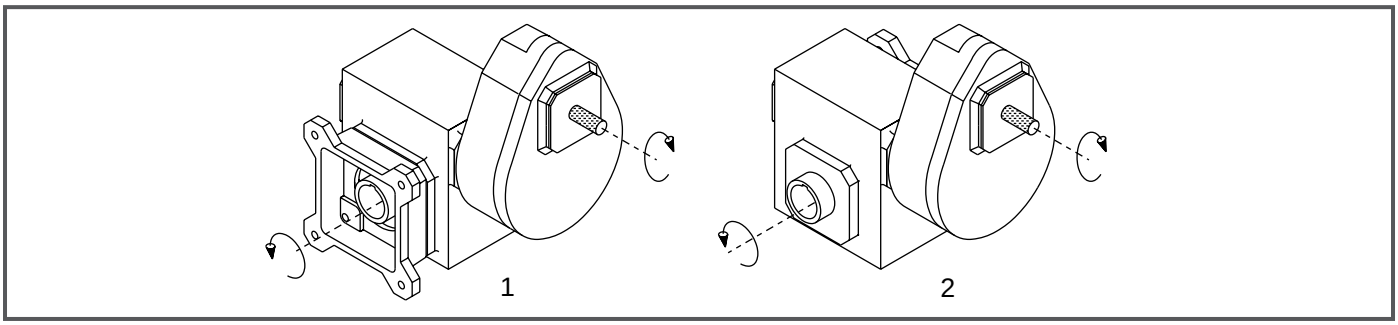


*Note: The input shaft may be rotated in either direction. Units are for mounting as shown. Contact factory for other mountings. Assembly positions also apply to motor flange units ("MQ" and "M").* ***See page 113 for additional assembly options.***

# Double Reduction

## Styles DXFH, DXFHMQ & DXFHM

| UNIT | A | AE | B | BB | C | D | E | F | FA | G | H | H Depth | I | J | K | L | M | N | R |
|---|---|---|---|---|---|---|---|---|---|---|---|---|---|---|---|---|---|---|---|
| 213 | 2.82 | .53 | 3.80 | .08 | 1.61 | 1.72 | 1.333 | 2.00 | N/A | 1.00 | 5/16-18 | .50 | 2.61 | 3.25 | 1.63 | N/A | N/A | 2.38 | 4.90 |
| 215 | 3.44 | .51 | 4.88 | .08 | 1.93 | 1.91 | 1.540 | 2.75 | N/A | 1.38 | 5/16-18 | .63 | 3.14 | 4.19 | 2.09 | N/A | N/A | 2.71 | 5.59 |
| 218 | 3.56 | .49 | 5.06 | .11 | 1.94 | 2.06 | 1.750 | 2.75 | N/A | 1.38 | 5/16-18 | .63 | 3.24 | 4.19 | 2.09 | N/A | N/A | 2.75 | 5.94 |
| 220 | 3.81 | .61 | 5.80 | .55 | 2.03 | 2.28 | 2.063 | 3.00 | N/A | 1.50 | 5/16-18 | .63 | 3.61 | 4.75 | 2.38 | N/A | N/A | 3.00 | 6.69 |
| 224 | 4.06 | .51 | 6.12 | .51 | 2.06 | 2.50 | 2.375 | 2.88 | N/A | 1.44 | 3/8-16 | .69 | 3.77 | 5.00 | 2.50 | 10.24 | 1.76 | 3.00 | 6.73 |
| 226 | 4.84 | .60 | 7.12 | .04 | 2.44 | 2.94 | 2.625 | 3.38 | N/A | 1.69 | 3/8-16 | .69 | 4.34 | 6.38 | 3.19 | 10.80 | 1.76 | 3.50 | 7.20 |
| 230 | 5.25 | .60 | 8.12 | .07 | 2.63 | 3.25 | 3.000 | 4.00 | N/A | 2.00 | 7/16-14 | .88 | 4.84 | 7.00 | 3.50 | 11.30 | 1.76 | 3.75 | 7.53 |
| 232 | 5.75 | .54 | 8.50 | .07 | 2.63 | 3.50 | 3.250 | 4.00 | N/A | 2.00 | 7/16-14 | .88 | 5.02 | 7.50 | 3.75 | 11.49 | 1.76 | 3.94 | 7.97 |
| 242 | 6.13 | .63 | 10.25 | .06 | 2.69 | 4.44 | 4.250 | 5.00 | N/A | 2.50 | 5/8-11 | 1.00 | 6.10 | 8.50 | 4.25 | 17.48 | 3.61 | 4.25 | 8.81 |
| 252 | 7.19 | .97 | 13.00 | .34 | 3.63 | 5.12 | 5.250 | 5.81 | N/A | 2.91 | 5/8-11 | 1.25 | 7.50 | 11.00 | 5.50 | 18.88 | 3.61 | 5.25 | 10.87 |
| 2600 | 8.13 | .52 | 14.25 | 1.38 | 4.00 | 6.50 | 6.000 | 6.38 | 10.24 | 3.19 | 5/8-11 | 1.00 | N/A | 12.75 | 6.38 | 19.60 | 3.61 | 5.75 | 13.01 |
| 2700 | 7.63 | 1.09 | 14.88 | 1.57 | 4.33 | 7.59 | 7.000 | 5.50 | 10.63 | 2.75 | 1-8 | 1.56 | N/A | 12.50 | 6.25 | 19.68 | 2.50 | 6.75 | 14.20 |
| 2800 | 8.63 | 1.03 | 17.00 | 1.89 | 4.11 | 8.86 | 8.000 | 6.50 | 11.93 | 3.25 | 1-8 | 1.66 | N/A | 14.25 | 7.13 | 21.30 | 3.00 | 7.25 | 15.59 |
| 21000 | 9.53 | 1.39 | 20.88 | 1.85 | 5.12 | 10.36 | 10.000 | 6.88 | 14.34 | 3.44 | 1 1/4-7 | 2.04 | N/A | 17.75 | 8.88 | 25.78 | 3.50 | 9.25 | 18.32 |

| UNIT | S** | T-max* | T-kwy*** | U Dia. | V | W | WP | X Dia. | XA | Y | Z Dia. |
|---|---|---|---|---|---|---|---|---|---|---|---|
| 213 | N/A | .625 | 3/16 x 3/32 | N/A | .38 | 5.92 | 5.00 | 5.00 | 6.16 | 4.50 | .34 |
| 215 | N/A | .625 | 3/16 x 3/32 | N/A | .38 | 5.92 | 5.00 | 5.00 | 6.56 | 4.50 | .34 |
| 218 | N/A | 1.000 | 1/4 x 1/8 | N/A | .38 | 6.64 | 5.00 | 5.88 | 6.92 | 5.00 | .34 |
| 220 | N/A | 1.438 | 3/8 x 3/16 | N/A | .44 | 7.88 | 5.00 | 7.00 | 7.45 | 5.99 | .41 |
| 224 | 3/16 x 1.44 | 1.438 | 3/8 x 3/16 | .625 | .44 | 8.39 | 6.50 | 7.50 | 8.45 | 6.27 | .41 |
| 226 | 3/16 x 1.44 | 1.438 | 3/8 x 3/16 | .625 | .50 | 8.88 | 6.50 | 8.00 | 9.13 | 6.67 | .41 |
| 230 | 3/16 x 1.44 | 1.938 | 1/2 x 1/4 | .625 | .50 | 9.89 | 6.50 | 9.00 | 9.82 | 7.37 | .41 |
| 232 | 3/16 x 1.44 | 1.938 | 1/2 x 1/4 | .625 | .50 | 9.89 | 6.50 | 9.00 | 10.32 | 7.37 | .41 |
| 242 | 1/4 x 2.17 | 2.188 | 1/2 x 1/4 | 1.250 | .62 | 12.95 | 8.50 | 11.50 | 13.31 | 9.65 | .56 |
| 252 | 1/4 x 2.17 | 3.438 | 7/8 x 7/16 | 1.250 | .75 | 15.50 | 8.50 | 14.00 | 14.99 | 11.75 | .69 |
| 2600 | 1/4 x 2.17 | 3.438 | 7/8 x 7/16 | 1.250 | .75 | 18.00 | 8.50 | 15.63 | 17.12 | 14.00 | .69 |
| 2700 | 1/4 x 2.25 | 3.938 | 1 x 1/2 | 1.125 | .75 | 21.00 | 10.36 | 18.38 | 21.84 | 15.63 | .78 |
| 2800 | 5/16 x 2.75 | 4.438 | 1 x 1/2 | 1.375 | .75 | 24.00 | 11.64 | 21.00 | 25.93 | 17.88 | 1.03 |
| 21000 | 3/8 x 3.25 | 5.438 | 1-1/4 x 5/8 | 1.500 | 1.00 | 29.00 | 13.85 | 25.00 | 31.35 | 21.19 | 1.03 |

** T dimensions are for max. bore diameter. For other bore diameters refer to catalog page 169.*
*** keyway width by length*
**** keyway width by depth*

*Note: Sizes 2700 through 21000 have an input shaft which is not aligned with the centerline of the gearbox.*

*Contact factory for further dimension details.*

*Note: All dimensions listed are for reference only. Contact factory for certified dimensions.*

WARNING *For safety, purchaser or user should provide protective guards over shaft extensions and any couplings, sheaves and belts, sprockets and chains, etc., mounted thereon.*

## NEMA Motor Data

### NEMA Motor Flange Face Locations

| | 48CZ | | | 56C/140TC | | | 180TC | | | 210TC | | | 250TC | | |
|---|---|---|---|---|---|---|---|---|---|---|---|---|---|---|---|
| UNIT | LM | RQ | LQ | LM | RQ | LQ | LM1 | RQ | LQ1 | LM1 | RQ | LQ1 | LM! | RQ | LQ1 |
| 213 | N/A | 7.79 | 8.29 | N/A | 7.79 | 8.29 | N/A | N/A | N/A | N/A | N/A | N/A | N/A | N/A | N/A |
| 215 | N/A | 8.32 | 8.82 | N/A | 8.32 | 8.82 | N/A | N/A | N/A | N/A | N/A | N/A | N/A | N/A | N/A |
| 218 | N/A | 8.42 | 8.92 | N/A | 8.42 | 8.92 | N/A | N/A | N/A | N/A | N/A | N/A | N/A | N/A | N/A |
| 220 | N/A | 8.79 | 9.29 | N/A | 8.79 | 9.29 | N/A | N/A | N/A | N/A | N/A | N/A | N/A | N/A | N/A |
| 224 | N/A | N/A | N/A | 12.49 | 9.38 | 9.88 | N/A | N/A | N/A | N/A | N/A | N/A | N/A | N/A | N/A |
| 226 | N/A | N/A | N/A | 13.05 | 9.94 | 10.44 | N/A | N/A | N/A | N/A | N/A | N/A | N/A | N/A | N/A |
| 230 | N/A | N/A | N/A | 13.55 | 10.44 | 10.94 | N/A | N/A | N/A | N/A | N/A | N/A | N/A | N/A | N/A |
| 232 | N/A | N/A | N/A | 13.74 | 10.63 | 11.13 | N/A | N/A | N/A | N/A | N/A | N/A | N/A | N/A | N/A |
| 242 | N/A | N/A | N/A | N/A | N/A | N/A | 20.66 | 14.46 | 14.97 | 20.66 | 14.46 | 14.97 | 21.22 | 14.86 | 15.53 |
| 252 | N/A | N/A | N/A | N/A | N/A | N/A | 22.06 | 15.86 | 16.37 | 22.06 | 15.86 | 16.37 | 22.62 | 16.26 | 16.93 |
| 2600 | N/A | N/A | N/A | N/A | N/A | N/A | 22.78 | 16.58 | 17.09 | 22.78 | 16.58 | 17.09 | 23.34 | 16.98 | 17.65 |

### NEMA Motor Mounting Dimensions

| Frame | AJ | AK | BD | OD | BE | BE1 | ME | ME1 | BORE | KWY.** | BF |
|---|---|---|---|---|---|---|---|---|---|---|---|
| 48CZ | 3.75 | 3.00 | 3.88 | 4.36 | .38 | N/A | .38 | N/A | .500 | 1/8 x 1/16 | .28 |
| 56C | 5.88 | 4.50 | 5.88 | 6.64 | .38 | N/A | .38 | N/A | .625 | 3/16 x 3/32 | .41 |
| 140TC | 5.88 | 4.50 | 5.88 | 6.64 | .38 | N/A | .38 | N/A | .875 | 3/16 x 3/32 | .41 |
| 180TC | 7.25 | 8.50 | 9.00 | 9.00 | N/A | .50 | N/A | .50 | 1.125 | 1/4 x 1/8 | .53 |
| 210TC | 7.25 | 8.50 | 9.00 | 9.00 | N/A | .50 | N/A | .50 | 1.375 | 5/16 x 5/32 | .53 |
| 250TC | 7.25 | 8.50 | 9.00 | 9.00 | N/A | .50 | N/A | .50 | 1.625 | 3/8 x 3/16 | .53 |

***keyway width by depth*

# Double Reduction

## Helical / Worm Dimensions

### Style DXV*(L or H)*H

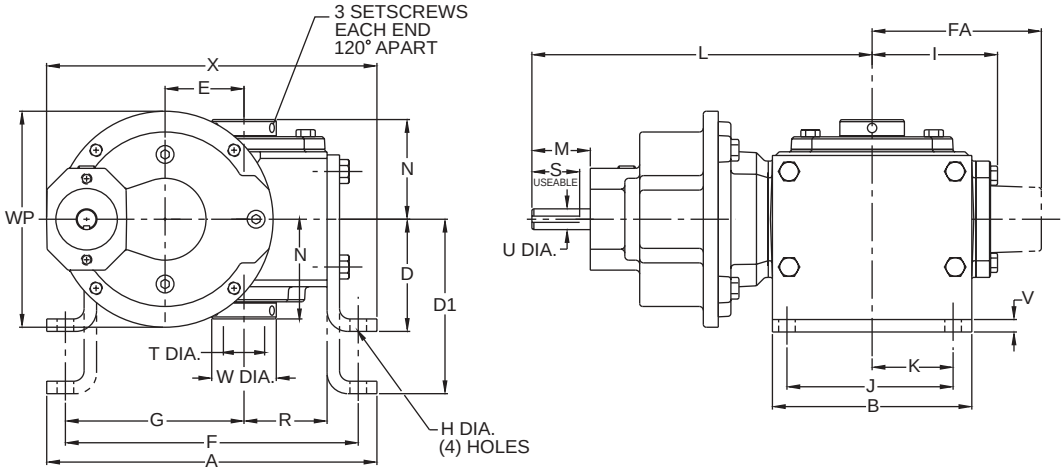


### Styles DXV*(L or H)*HMQ & DXV*(L or H)*M

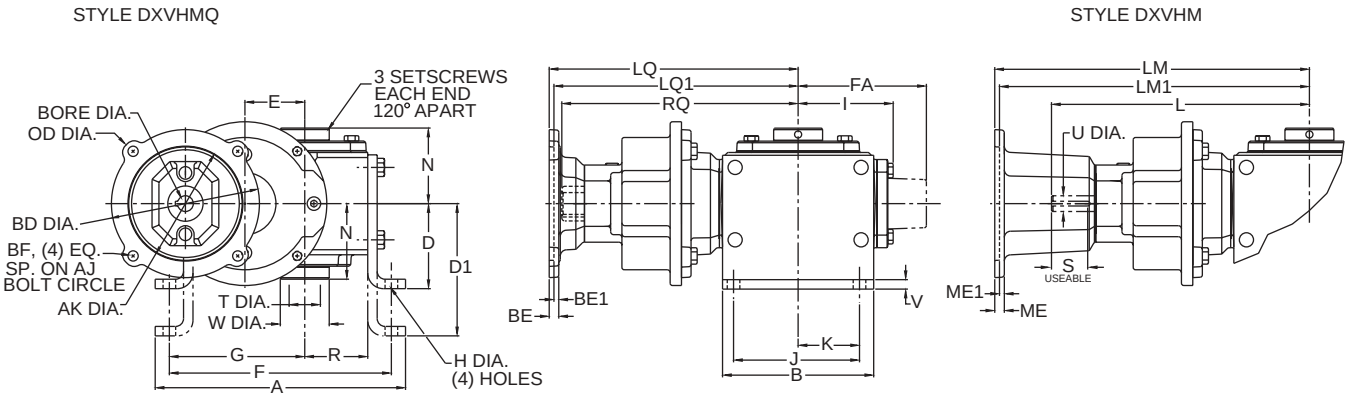


### Assemblies

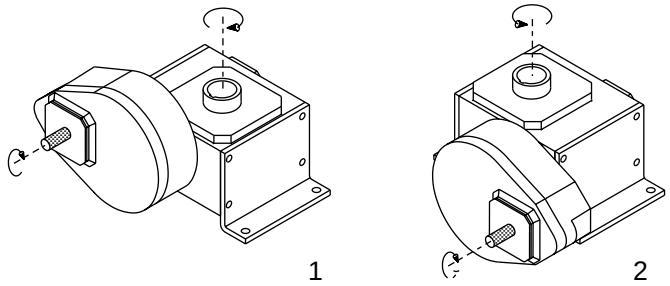


*Note: The input shaft may be rotated in either direction. Units are for mounting as shown. Contact factory for other mountings. Assembly positions also apply to motor flange units ("MQ" and "M").* ***See page 114 for additional assembly options.***

# Double Reduction

## Styles DXV(*L or H*)H, DXV(*L or H*)HMQ & DXV(*L or H*)HM

| UNIT | A | B | D | D1 | E | F | FA | G | H | I | J | K | L | M | N | R | S** | T-max* |
|---|---|---|---|---|---|---|---|---|---|---|---|---|---|---|---|---|---|---|
| 213 | 7.26 | 4.00 | 2.63 | 3.56 | 1.333 | 6.50 | N/A | 3.86 | .38 | 2.61 | 3.00 | 1.50 | N/A | N/A | 2.38 | 1.72 | N/A | .625 |
| 215 | 7.88 | 5.00 | 3.00 | 4.38 | 1.540 | 7.00 | N/A | 4.28 | .44 | 3.14 | 4.00 | 2.00 | N/A | N/A | 2.71 | 1.91 | N/A | .625 |
| 218 | 8.25 | 5.00 | 3.00 | 4.38 | 1.750 | 7.37 | N/A | 4.50 | .44 | 3.24 | 4.00 | 2.00 | N/A | N/A | 2.75 | 2.06 | N/A | 1.000 |
| 220 | 9.38 | 6.00 | 3.13 | 4.88 | 2.063 | 8.38 | N/A | 5.09 | .50 | 3.61 | 4.88 | 2.44 | N/A | N/A | 3.00 | 2.28 | N/A | 1.438 |
| 224 | 9.94 | 6.00 | 3.38 | 5.25 | 2.375 | 8.81 | N/A | 5.38 | .50 | 3.77 | 4.88 | 2.44 | 10.24 | 1.76 | 3.00 | 2.50 | 3/16 x 1.44 | 1.438 |
| 226 | 11.24 | 7.00 | 3.63 | 5.56 | 2.625 | 10.12 | N/A | 6.12 | .56 | 4.34 | 5.75 | 2.88 | 10.80 | 1.76 | 3.50 | 2.94 | 3/16 x 1.44 | 1.438 |
| 230 | 12.50 | 8.00 | 3.94 | 5.88 | 3.000 | 11.13 | N/A | 6.75 | .56 | 4.84 | 6.00 | 3.00 | 11.30 | 1.76 | 3.75 | 3.25 | 3/16 x 1.44 | 1.938 |
| 232 | 13.00 | 8.50 | 4.69 | 6.25 | 3.250 | 11.88 | N/A | 7.13 | .56 | 5.02 | 6.13 | 3.06 | 11.49 | 1.76 | 3.94 | 3.50 | 3/16 x 1.44 | 1.938 |
| 242 | 16.26 | 10.00 | 5.00 | 7.50 | 4.250 | 14.88 | N/A | 8.69 | .69 | 6.10 | 7.88 | 3.94 | 17.48 | 3.61 | 4.25 | 4.44 | 1/4 x 2.17 | 2.188 |
| 252 | 19.62 | 13.00 | 5.16 | 9.16 | 5.250 | 18.00 | N/A | 10.88 | .78 | 7.50 | 10.00 | 5.00 | 18.88 | 3.61 | 5.25 | 5.12 | 1/4 x 2.17 | 3.438 |
| 2600 | 23.26 | 14.75 | 7.31 | 9.63 | 6.000 | 20.88 | 10.24 | 12.19 | .91 | N/A | 11.76 | 5.88 | 19.60 | 3.61 | 5.75 | 6.50 | 1/4 x 2.17 | 3.438 |
| 2700 | 26.91 | 14.88 | 7.00 | N/A | 7.000 | 23.99 | 10.63 | 13.87 | 1.13 | N/A | 12.50 | 6.25 | 19.68 | 2.50 | 6.75 | 7.59 | 1/4 x 2.25 | 3.938 |
| 2800 | 28.96 | 17.00 | 8.00 | N/A | 8.000 | 25.50 | 11.93 | 14.38 | 1.13 | N/A | 14.00 | 7.00 | 21.30 | 3.00 | 7.25 | 8.86 | 5/16 x 2.75 | 4.438 |
| 21000 | 37.47 | 20.88 | 9.00 | N/A | 10.000 | 30.75 | 14.34 | 17.76 | 1.44 | N/A | 17.75 | 8.88 | 25.78 | 3.50 | 9.25 | 10.36 | 3/8 x 3.25 | 5.438 |

| UNIT | T-kwy*** | U Dia. | V | W Dia. | WP | X |
|---|---|---|---|---|---|---|
| 213 | 3/16 x 3/32 | N/A | .25 | 1.00 | 5.00 | 7.46 |
| 215 | 3/16 x 3/32 | N/A | .25 | 1.00 | 5.00 | 7.81 |
| 218 | 1/4 x 1/8 | N/A | .25 | 1.44 | 5.00 | 8.17 |
| 220 | 3/8 x 3/16 | N/A | .38 | 1.94 | 5.00 | 8.95 |
| 224 | 3/8 x 3/16 | .625 | .38 | 1.94 | 6.50 | 9.95 |
| 226 | 3/8 x 3/16 | .625 | .38 | 1.94 | 6.50 | 10.75 |
| 230 | 1/2 x 1/4 | .625 | .38 | 2.51 | 6.50 | 11.63 |
| 232 | 1/2 x 1/4 | .625 | .38 | 2.51 | 6.50 | 12.13 |
| 242 | 1/2 x 1/4 | 1.250 | .50 | 2.75 | 8.50 | 15.75 |
| 252 | 7/8 x 7/16 | 1.250 | .50 | 4.26 | 8.50 | 17.80 |
| 2600 | 7/8 x 7/16 | 1.250 | .50 | 4.18 | 8.50 | 20.50 |
| 2700 | 1 x 1/2 | 1.125 | .75 | 4.92 | 10.36 | 25.84 |
| 2800 | 1 x 1/2 | 1.375 | .75 | 5.55 | 11.64 | 29.93 |
| 21000 | 1-1/4 x 5/8 | 1.500 | 1.00 | 6.67 | 13.85 | 37.35 |

** T dimensions are for max. bore diameter. For other bore diameters refer to catalog page 169.*
*** keyway width by length*

**** keyway width by depth*

*Note: Sizes 2700 through 21000 have an input shaft which is not aligned with the centerline of the gearbox.*

*Contact factory for further dimension details.*

*Note: All dimensions listed are for reference only. Contact factory for certified dimensions.*

**WARNING** *For safety, purchaser or user should provide protective guards over shaft extensions and any couplings, sheaves and belts, sprockets and chains, etc., mounted thereon.*

## NEMA Motor Data

### NEMA Motor Flange Face Locations

| | 48CZ | | | 56C/140TC | | | 180TC | | | 210TC | | | 250TC | | |
|---|---|---|---|---|---|---|---|---|---|---|---|---|---|---|---|
| UNIT | LM | RQ | LQ | LM | RQ | LQ | LM1 | RQ | LQ1 | LM1 | RQ | LQ1 | LM! | RQ | LQ1 |
| 213 | N/A | 7.79 | 8.29 | N/A | 7.79 | 8.29 | N/A | N/A | N/A | N/A | N/A | N/A | N/A | N/A | N/A |
| 215 | N/A | 8.32 | 8.82 | N/A | 8.32 | 8.82 | N/A | N/A | N/A | N/A | N/A | N/A | N/A | N/A | N/A |
| 218 | N/A | 8.42 | 8.92 | N/A | 8.42 | 8.92 | N/A | N/A | N/A | N/A | N/A | N/A | N/A | N/A | N/A |
| 220 | N/A | 8.79 | 9.29 | N/A | 8.79 | 9.29 | N/A | N/A | N/A | N/A | N/A | N/A | N/A | N/A | N/A |
| 224 | N/A | N/A | N/A | 12.49 | 9.38 | 9.88 | N/A | N/A | N/A | N/A | N/A | N/A | N/A | N/A | N/A |
| 226 | N/A | N/A | N/A | 13.05 | 9.94 | 10.44 | N/A | N/A | N/A | N/A | N/A | N/A | N/A | N/A | N/A |
| 230 | N/A | N/A | N/A | 13.55 | 10.44 | 10.94 | N/A | N/A | N/A | N/A | N/A | N/A | N/A | N/A | N/A |
| 232 | N/A | N/A | N/A | 13.74 | 10.63 | 11.13 | N/A | N/A | N/A | N/A | N/A | N/A | N/A | N/A | N/A |
| 242 | N/A | N/A | N/A | N/A | N/A | N/A | 20.66 | 14.46 | 14.97 | 20.66 | 14.46 | 14.97 | 21.22 | 14.86 | 15.53 |
| 252 | N/A | N/A | N/A | N/A | N/A | N/A | 22.06 | 15.86 | 16.37 | 22.06 | 15.86 | 16.37 | 22.62 | 16.26 | 16.93 |
| 2600 | N/A | N/A | N/A | N/A | N/A | N/A | 22.78 | 16.58 | 17.09 | 22.78 | 16.58 | 17.09 | 23.34 | 16.98 | 17.65 |

### NEMA Motor Mounting Dimensions

| Frame | AJ | AK | BD | OD | BE | BE1 | ME | ME1 | BORE | KWY.** | BF |
|---|---|---|---|---|---|---|---|---|---|---|---|
| 48CZ | 3.75 | 3.00 | 3.88 | 4.36 | .38 | N/A | .38 | N/A | .500 | 1/8 x 1/16 | .28 |
| 56C | 5.88 | 4.50 | 5.88 | 6.64 | .38 | N/A | .38 | N/A | .625 | 3/16 x 3/32 | .41 |
| 140TC | 5.88 | 4.50 | 5.88 | 6.64 | .38 | N/A | .38 | N/A | .875 | 3/16 x 3/32 | .41 |
| 180TC | 7.25 | 8.50 | 9.00 | 9.00 | N/A | .50 | N/A | .50 | 1.125 | 1/4 x 1/8 | .53 |
| 210TC | 7.25 | 8.50 | 9.00 | 9.00 | N/A | .50 | N/A | .50 | 1.375 | 5/16 x 5/32 | .53 |
| 250TC | 7.25 | 8.50 | 9.00 | 9.00 | N/A | .50 | N/A | .50 | 1.625 | 3/8 x 3/16 | .53 |

***keyway width by depth*

# Double Reduction

## Helical / Worm Dimensions

### Style DXFE

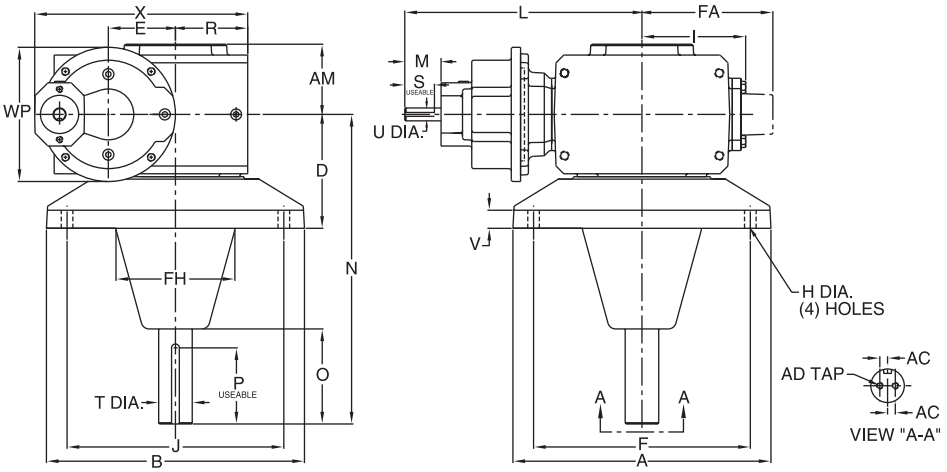


### Styles DXFEMQ & DXFEM

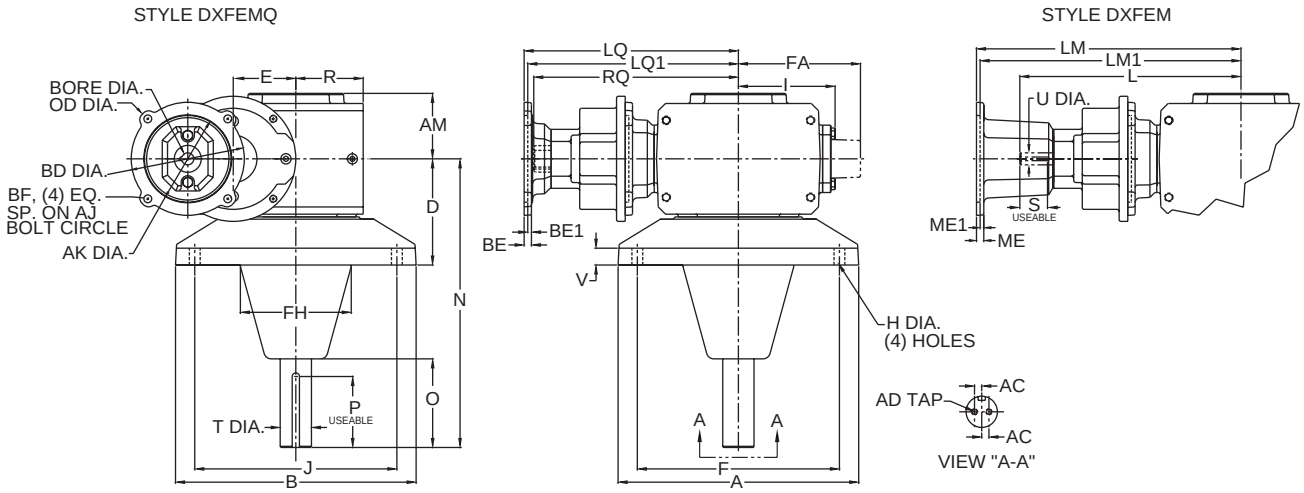


### Assemblies

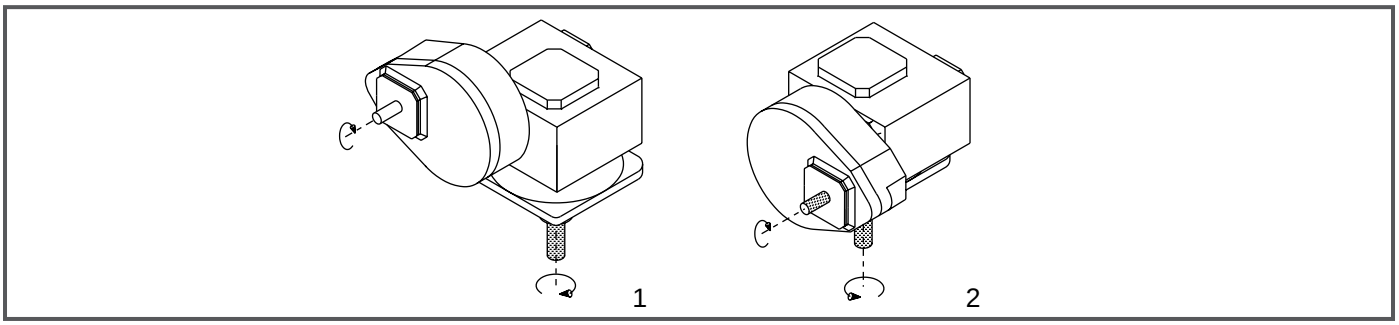


*Note: The input shaft may be rotated in either direction. Units are for mounting as shown. Contact factory for other mountings. Assembly positions also apply to motor flange units ("MQ" and "M").* ***See page 114 for additional assembly options.***

# Double Reduction

## Styles DXFE, DXFEMQ & DXFEM

| UNIT | A | AC | AD | AM | B | D | E | F | FA | FH | H Dia. | I | J | L | M | N | O |
|---|---|---|---|---|---|---|---|---|---|---|---|---|---|---|---|---|---|
| 230 | 11.00 | .375 | .31-18 UNC x 1.00 DP | 3.15 | 11.00 | 4.60 | 3.000 | 9.00 | N/A | 5.12 | .56 | 4.84 | 9.00 | 11.30 | 1.76 | 14.38 | 4.96 |
| 232 | 12.50 | .375 | .31-18 UNC x 1.00 DP | 3.40 | 12.50 | 5.52 | 3.250 | 10.50 | N/A | 5.75 | .56 | 5.02 | 10.50 | 11.49 | 1.76 | 15.00 | 4.63 |
| 242 | 14.00 | .500 | .38-16 UNC x 1.00 DP | 3.62 | 14.00 | 5.74 | 4.250 | 12.00 | N/A | 6.75 | .69 | 6.10 | 12.00 | 17.48 | 3.61 | 16.50 | 5.91 |
| 252 | 16.00 | .750 | .38-16 UNC x 1.00 DP | 4.28 | 16.00 | 6.00 | 5.250 | 14.00 | N/A | 8.00 | .81 | 7.50 | 14.00 | 18.88 | 3.61 | 16.50 | 5.62 |
| 2600 | 19.50 | .750 | .38-16 UNC x 1.00 DP | 5.28 | 19.50 | 7.00 | 6.000 | 17.00 | 10.24 | 9.50 | .88 | N/A | 17.00 | 19.60 | 3.61 | 22.50 | 7.63 |
| 2700 | 22.00 | 1.000 | .38-16 UNC x 1.00 DP | 6.06 | 22.00 | 8.50 | 7.000 | 19.00 | 10.63 | 10.75 | 1.13 | N/A | 19.00 | 19.68 | 2.50 | 24.00 | 7.63 |
| 2800 | 28.00 | 1.062 | .62-11 UNC x 1.50 DP | 6.22 | 28.00 | 10.00 | 8.000 | 24.00 | 11.93 | 13.75 | 1.31 | N/A | 24.00 | 21.30 | 3.00 | 27.06 | 9.25 |
| 21000 | 32.00 | 1.188 | .62-11 UNC x 1.50 DP | 7.94 | 32.00 | 12.50 | 10.000 | 28.00 | 14.34 | 17.00 | 1.31 | N/A | 28.00 | 25.78 | 3.50 | 29.50 | 9.43 |

| UNIT | P** | R | S** | T Dia. | U Dia. | V | WP | X |
|---|---|---|---|---|---|---|---|---|
| 230 | 3/8 x 3.88 | 3.25 | 3/16 x 1.44 | 1.438 | .625 | .78 | 6.50 | 9.82 |
| 232 | 3/8 x 3.69 | 3.50 | 3/16 x 1.44 | 1.625 | .625 | .88 | 6.50 | 10.32 |
| 242 | 3/8 x 4.68 | 4.44 | 1/4 x 2.17 | 1.688 | 1.250 | 1.00 | 8.50 | 13.31 |
| 252 | 1/2 x 4.63 | 5.12 | 1/4 x 2.17 | 2.188 | 1.250 | 1.25 | 8.50 | 14.99 |
| 2600 | 5/8 x 6.50 | 6.50 | 1/4 x 2.17 | 2.438 | 1.250 | 1.50 | 8.50 | 17.12 |
| 2700 | 3/4 x 6.44 | 7.59 | 1/4 x 2.25 | 2.937 | 1.125 | 1.75 | 10.36 | 21.84 |
| 2800 | 7/8 x 8.00 | 8.86 | 5/16 x 2.75 | 3.438 | 1.375 | 2.00 | 11.64 | 25.93 |
| 21000 | 1 x 7.75 | 10.36 | 3/8 x 3.25 | 3.938 | 1.500 | 2.25 | 13.85 | 31.35 |

**applies to double output shaft*
***keyway width by length*

*Note: "0" on units size 2600 thru 21000 is the minimum dimension to output seal or screw head.*

*Sizes 2700 through 21000 have an input shaft which is not aligned with the centerline of the gearbox.*

*Contact factory for further dimension details.*

## NEMA Motor Data

### NEMA Motor Flange Face Locations

| | 56C/140TC | | | 180TC | | | 210TC | | | 250TC | | |
|---|---|---|---|---|---|---|---|---|---|---|---|---|
| UNIT | LM | RQ | LQ | LM1 | RQ | LQ1 | LM1 | RQ | LQ1 | LM! | RQ | LQ1 |
| 230 | 13.55 | 10.44 | 10.94 | N/A | N/A | N/A | N/A | N/A | N/A | N/A | N/A | N/A |
| 232 | 13.74 | 10.63 | 11.13 | N/A | N/A | N/A | N/A | N/A | N/A | N/A | N/A | N/A |
| 242 | N/A | N/A | N/A | 20.66 | 14.46 | 14.97 | 20.66 | 14.46 | 14.97 | 21.22 | 14.86 | 15.53 |
| 252 | N/A | N/A | N/A | 22.06 | 15.86 | 16.37 | 22.06 | 15.86 | 16.37 | 22.62 | 16.26 | 16.93 |
| 2600 | N/A | N/A | N/A | 22.78 | 16.58 | 17.09 | 22.78 | 16.58 | 17.09 | 23.34 | 16.98 | 17.65 |

### NEMA Motor Mounting Dimensions

| Frame | AJ | AK | BD | OD | BE | BE1 | ME | ME1 | BORE | KWY.** | BF |
|---|---|---|---|---|---|---|---|---|---|---|---|
| 56C | 5.88 | 4.50 | 5.88 | 6.64 | .38 | N/A | .38 | N/A | .625 | 3/16 x 3/32 | .41 |
| 140TC | 5.88 | 4.50 | 5.88 | 6.64 | .38 | N/A | .38 | N/A | .875 | 3/16 x 3/32 | .41 |
| 180TC | 7.25 | 8.50 | 9.00 | 9.00 | N/A | .50 | N/A | .50 | 1.125 | 1/4 x 1/8 | .53 |
| 210TC | 7.25 | 8.50 | 9.00 | 9.00 | N/A | .50 | N/A | .50 | 1.375 | 5/16 x 5/32 | .53 |
| 250TC | 7.25 | 8.50 | 9.00 | 9.00 | N/A | .50 | N/A | .50 | 1.625 | 3/8 x 3/16 | .53 |

***keyway width by depth*

*Note: All dimensions listed are for reference only. Contact factory for certified dimensions.*

WARNING *For safety, purchaser or user should provide protective guards over shaft extensions and any couplings, sheaves and belts, sprockets and chains, etc., mounted thereon.*

# Double Reduction

## Helical / Worm Assemblies

### Styles DX & DXT

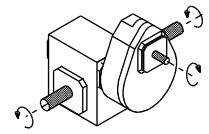
1

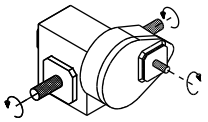
1A

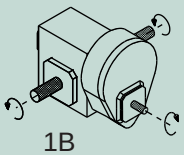
1B

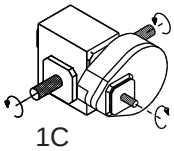
1C

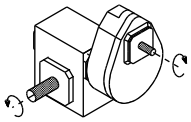
2

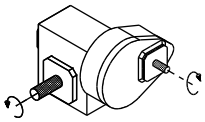
2A

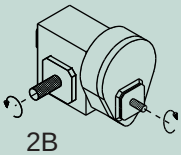
2B

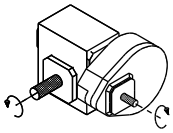
2C

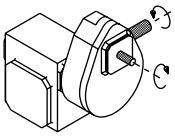
3

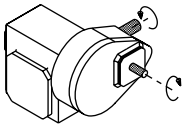
3A

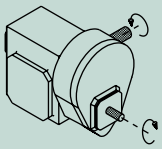
3B

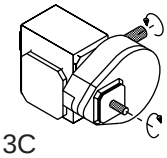
3C

### Style DXU

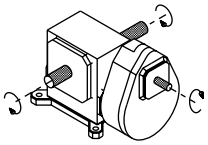
1

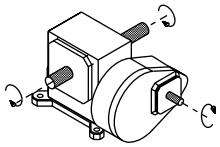
1A

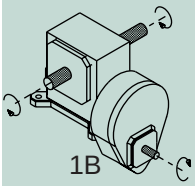
1B

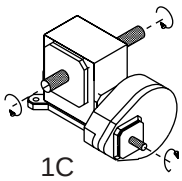
1C

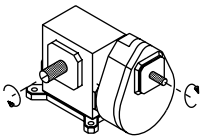
2

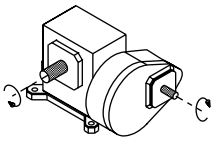
2A

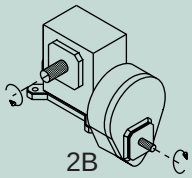
2B

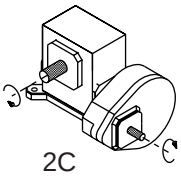
2C

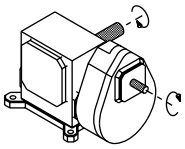
3

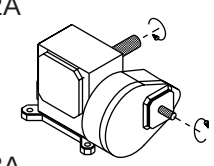
3A

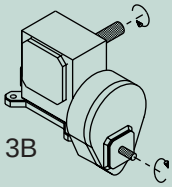
3B

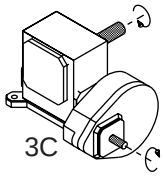
3C

### Style DXJ

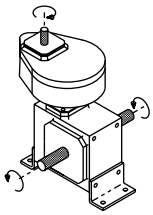
1

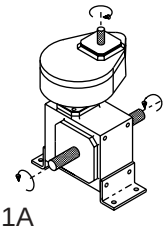
1A

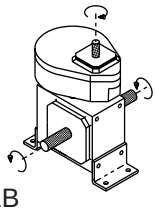
1B

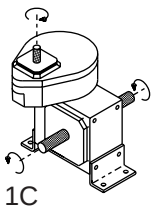
1C

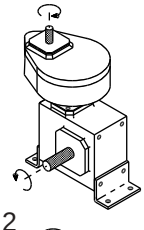
2

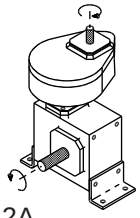
2A

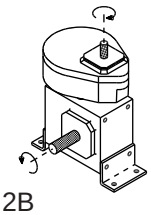
2B

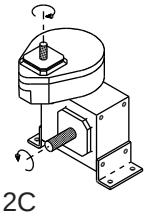
2C

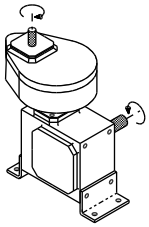
3

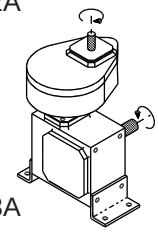
3A

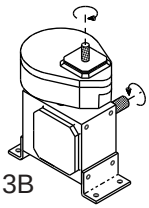
3B

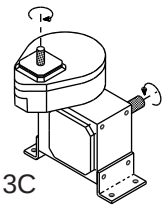
3C

# Double Reduction

## Helical / Worm Assemblies

### Styles DXV*(L or H)*

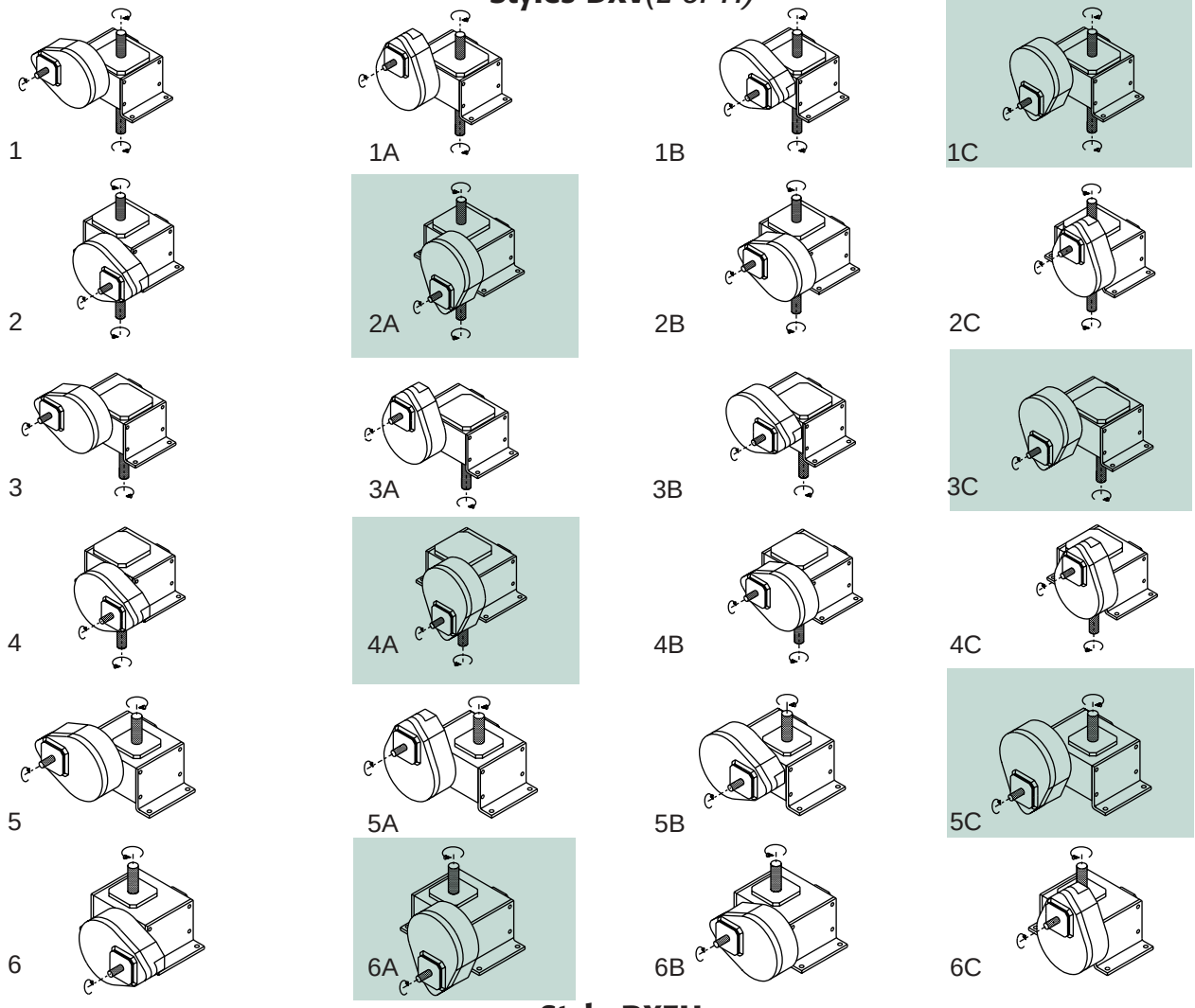


### Style DXFH

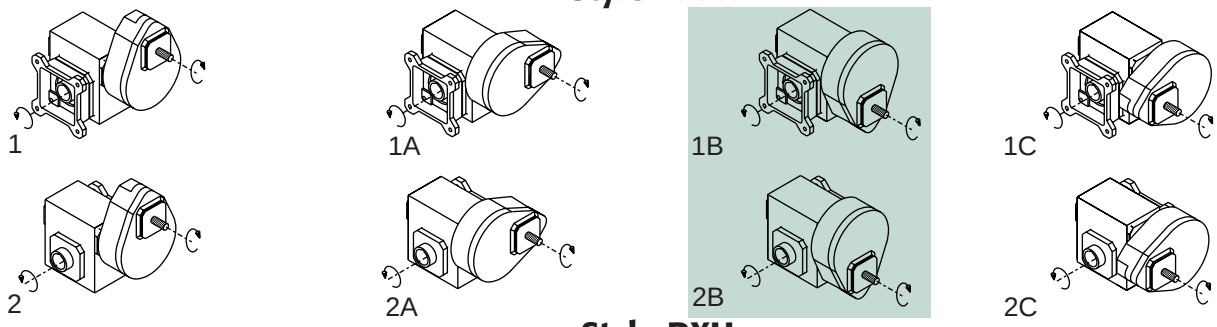


### Style DXH

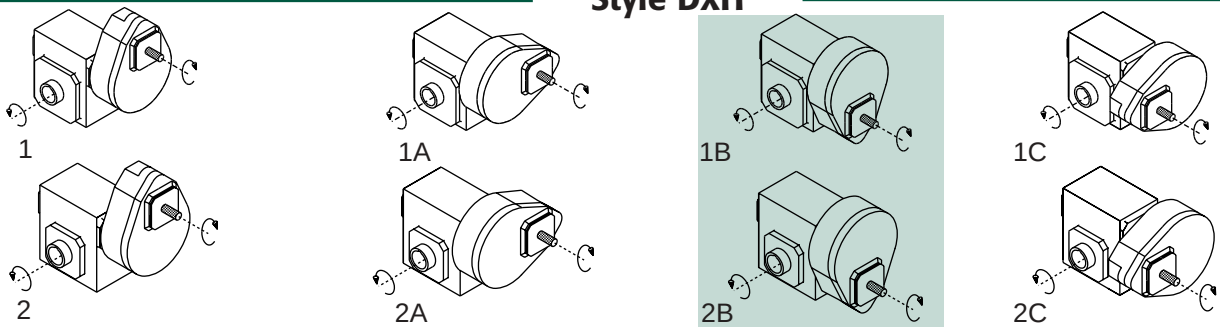


***Note: The shaded mounting positions on assembly pages are not recommended due to the increased probability of leakage from high speed shaft seals.*** *Assembly position options also apply to motor flange units ("MQ" and "M"). The input shaft may be rotated in either direction. Units are for*

# Double Reduction

## Helical / Worm Assemblies

### Style DXF

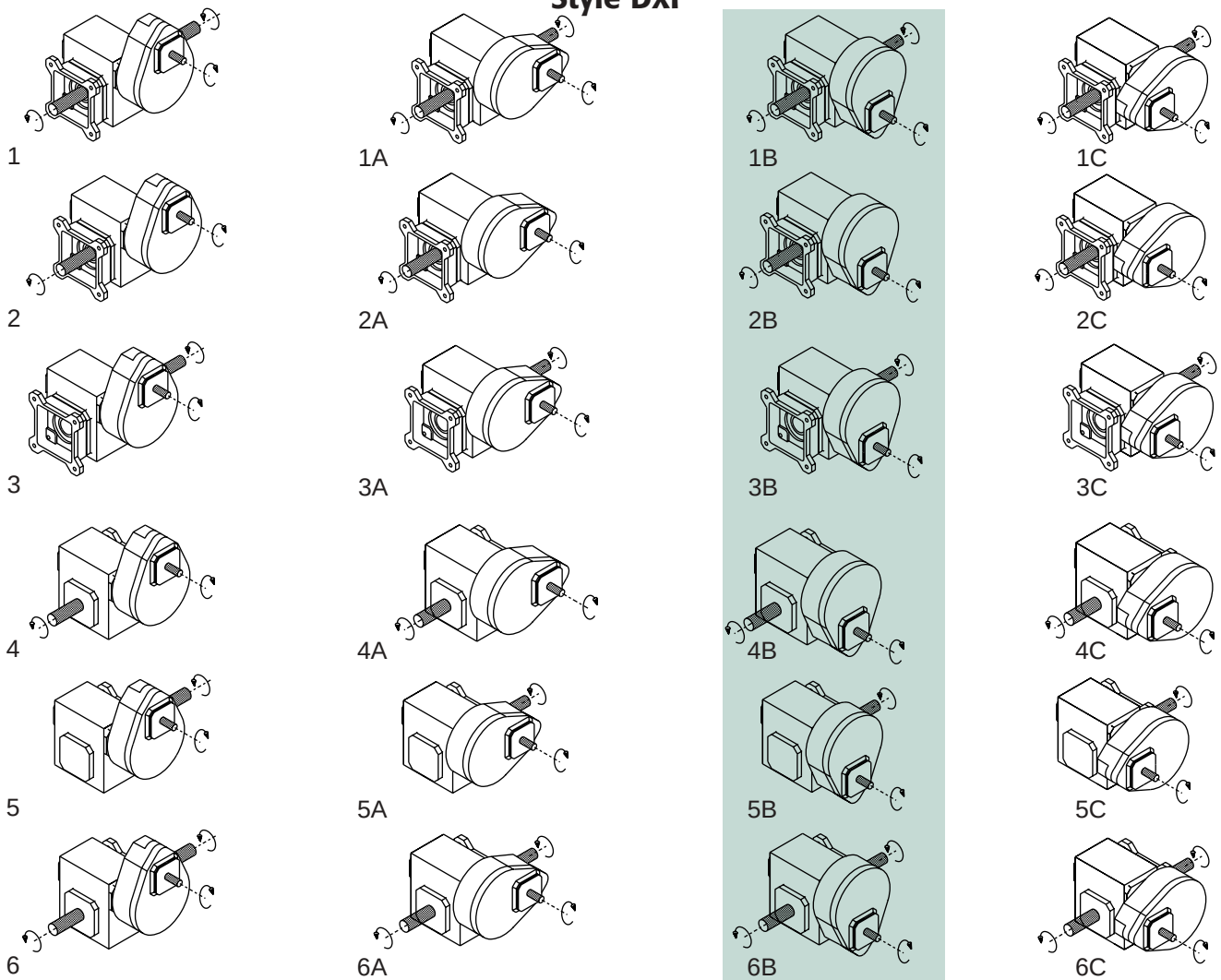


### Style DXV*(L or H)*H

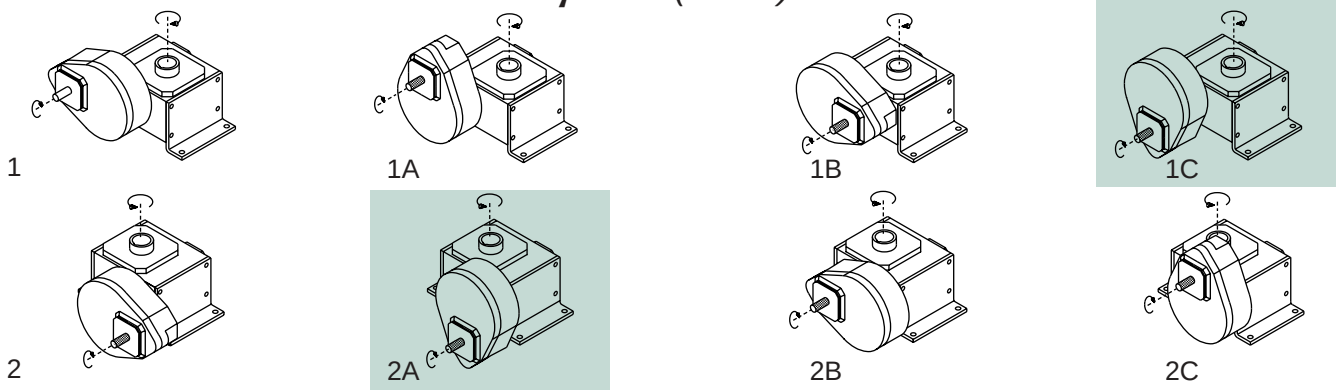


### Style DXFE

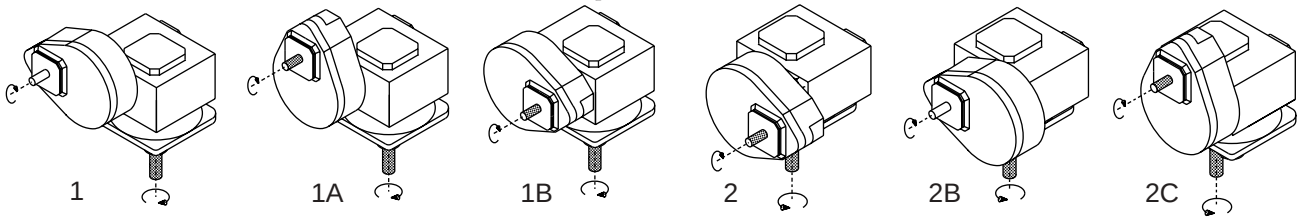


***Note:** The shaded mounting positions on assembly pages are not recommended due to the increased probability of leakage from high speed shaft seals.* *Assembly position options also apply to motor flange units ("MQ" and "M"). The input shaft may be rotated in either direction. Units are for mounting as shown. Contact factory for other mountings.*

# The Triple Reduction Worm/Worm/Worm Flexaline Speed Reducer

New dimension and assembly drawings, and rating tables plus more in the Worm/Worm/Worm section...

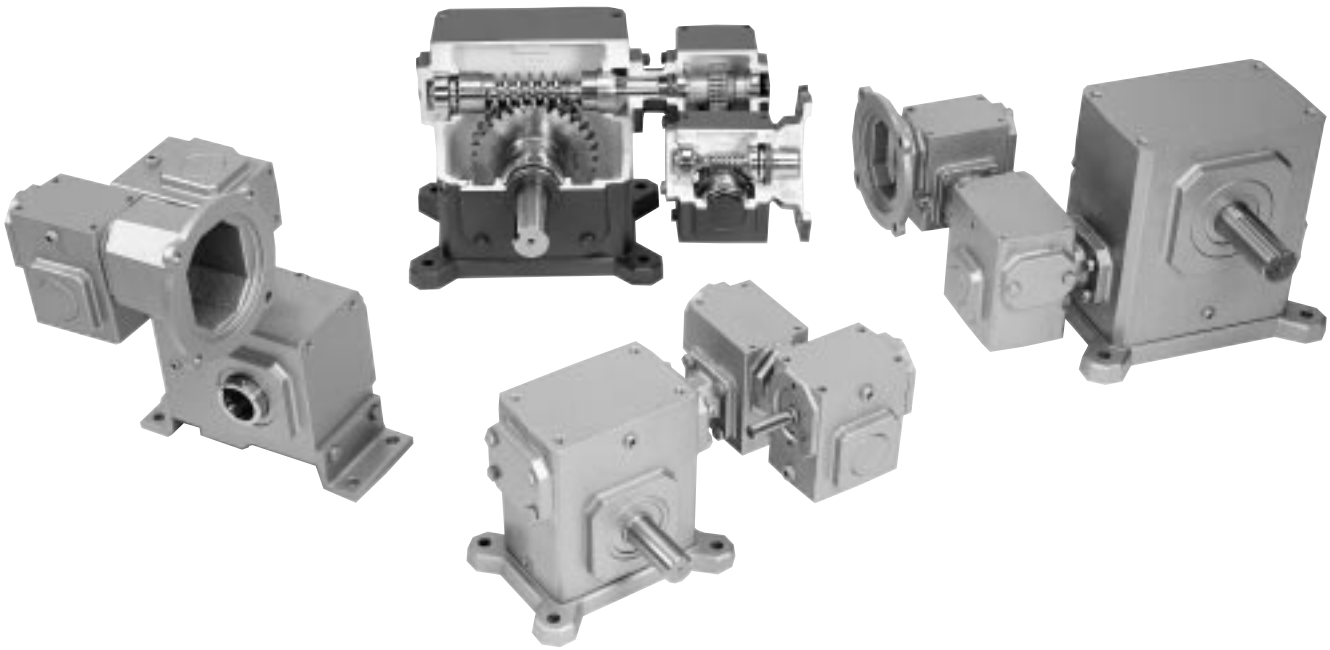

# Triple Reduction
# Flexaline Speed Reducers
# Worm/Worm/Worm

| | Page |
|---|---|
| **Selection Guide** | 118 |
| **Rating Tables** | |
| Sizes 213-224 | 119 |
| Sizes 226-252 | 120 |
| Sizes 2600-21000 | 121 |
| **Approximate Shipping Weights** | 122 |
| **Dimension Sheet Index** | 123 |
| **Dimension Sheets** | 124 - 131 |
| **Accessories and Options** | 156 - 163 |
| **Engineering Information** | 164 |
| **Parts List** | 182 |

*Triple Reduction*

# Worm / Worm / Worm Reduction Product Features

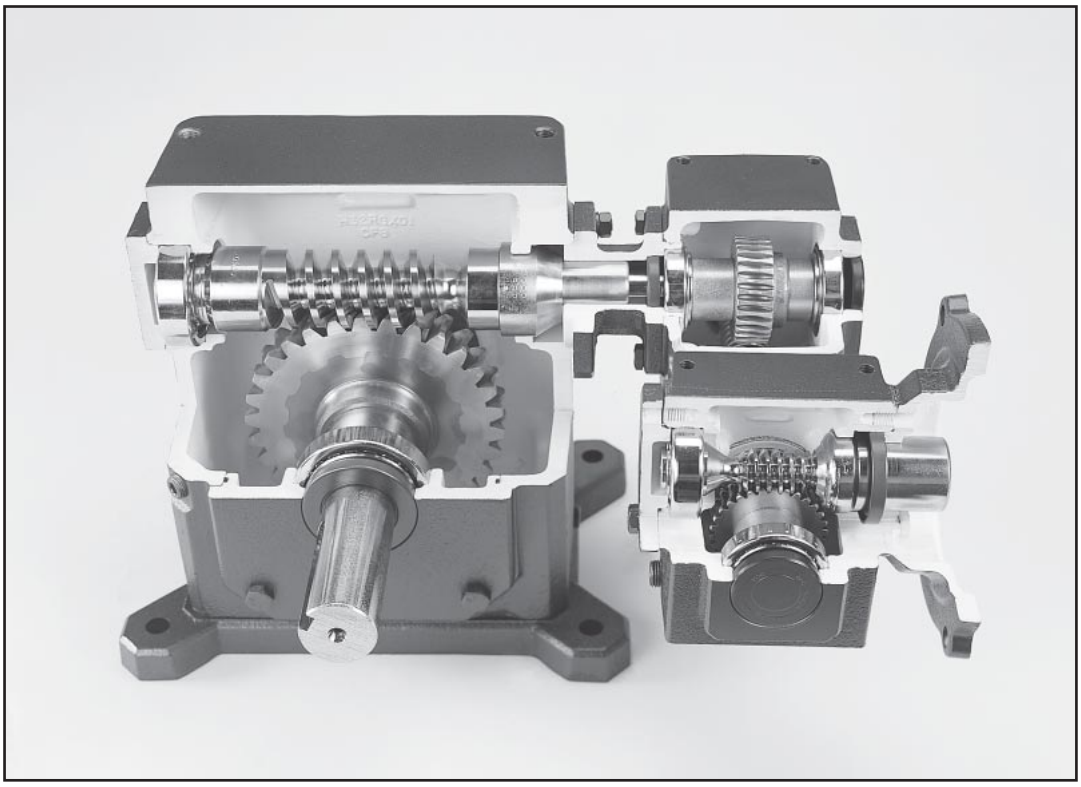

- **Rugged iron housings**, covers, and flanges, provide superior strength and rigidity.
- **Single cover output design** ensures gear centering for maximum efficiency and minimum noise levels.*
- **Three separate housings** in the triple reduction design insures long trouble free life of all components.
- The **worm shaft** is cut integral with the input shaft then hardened, ground, and polished to provide maximum efficiency with minimum gear noise.
- The **bronze worm gear** is chill cast from the highest quality bronze to provide superior wear and lubricity characteristics for longer life and higher efficiency.
- **Premium tapered roller bearings** on output shafts provide greater life, overhung load and thrust capacity.
- **Oversized steel output shafts** provide superior overhung load and torque characteristics.
- **Premium Chicago Rawhide Viton® double lip seals** provide extended life because of increased resistance to high temperature, abrasion and chemicals.*
- **O-rings on input and output covers** provide positive sealing without undependable gaskets or messy silicone sealants.*
- **Non-compressible metal shims** maintain factory bearing settings and gear alignment throughout the life of the product.*
- The unique **quill seal guard** protects the input seal from damage during motor installation.*
- **Large oil capacity** provides positive splash lubrication and superior cooling capability.
- **Metal nameplate drive screwed to housing** insures easy field identification for repair parts and replacement.
- **Units are oil filled at the factory** with the proper lubrication to provide simple and economical installation.**
- **All units are 100% run and leak tested** at the factory to insure that you receive the highest quality product.

**Standard on unit sizes up to and including 5 1/4 inch center distance only. (Size 213 to 252)*
***Seven, eight, and ten inch center distance reducers are shipped without oil. (Sizes 2700, 2800 and 21000)*

# Triple Reduction

## Worm / Worm / Worm Selection Guide

### Style TT

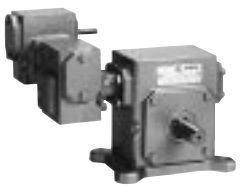

*Ratings - Pg. 119-121*
*Dimensions - Pg. 124-125*

### Style TTM

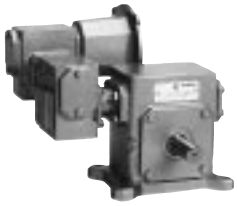

*Ratings - Pg. 119-121*
*Dimensions - Pg. 124-125*

### Style TTMQ

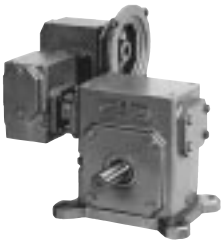

*Ratings - Pg. 119-121*
*Dimensions - Pg. 124-125*

### Style TU

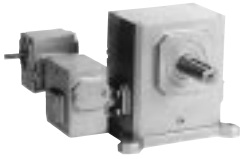

*Ratings - Pg. 119-121*
*Dimensions - Pg. 126-127*

### Style TUM

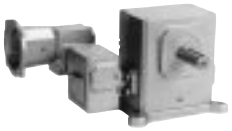

*Ratings - Pg. 119-121*
*Dimensions - Pg. 126-127*

### Style TUMQ

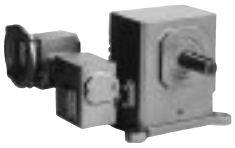

*Ratings - Pg. 119-121*
*Dimensions - Pg. 126-127*

### Style TVL

*Ratings - Pg. 119-121*
*Dimensions - Pg. 128-129*

### Style TVLM

*Ratings - Pg. 119-121*
*Dimensions - Pg. 128-129*

### Style TVLMQ

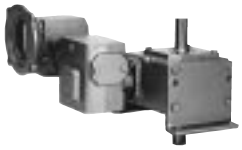

*Ratings - Pg. 119-121*
*Dimensions - Pg. 128-129*

### Style TVH

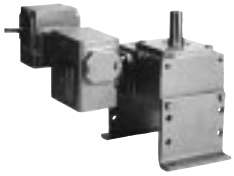

*Ratings - Pg. 119-121*
*Dimensions - Pg. 128-129*

### Style TVHM

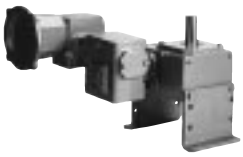

*Ratings - Pg. 119-121*
*Dimensions - Pg. 128-129*

### Style TVHMQ

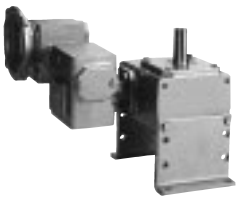

*Ratings - Pg. 119-121*
*Dimensions - Pg. 128-129*

### Style TH

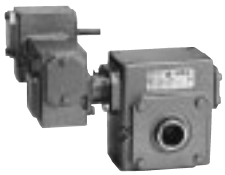

*Ratings - Pg. 119-121*
*Dimensions - Pg. **

### Style THM

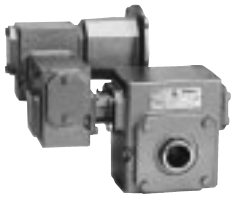

*Ratings - Pg. 119-121*
*Dimensions - Pg. **

### Style THMQ

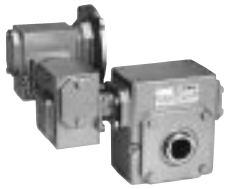

*Ratings - Pg. 119-121*
*Dimensions - Pg. **

### Style TF

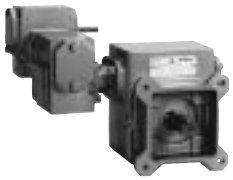

*Ratings - Pg. 119-121*
*Dimensions - Pg. 130-131*

### Style TFM

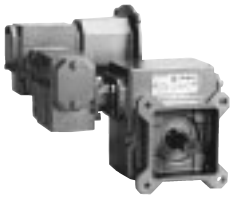

*Ratings - Pg. 119-121*
*Dimensions - Pg. 130-131*

### Style TFMQ

*Ratings - Pg. 119-121*
*Dimensions - Pg. 130-131*

* Contact factory for dimension information

# Triple Reduction

## Worm / Worm / Worm Rating Table

| | | Size 213 | | Size 215 | | Size 218 | | Size 220 | | Size 224 | |
|---|---|---|---|---|---|---|---|---|---|---|---|
| Ratio | Output Speed (RPM)* | Input H.P.* | Output Torque (In. Lbs.) | Input H.P.* | Output Torque (In. Lbs.) | Input H.P.* | Output Torque (In. Lbs.) | Input H.P.* | Output Torque (In. Lbs.) | Input H.P.* | Output Torque (In. Lbs.) |
| 1000 | 1.75 | .0226 | 339 | .0429 | 566 | .0416 | 688 | .0667 | 1127 | .106 | 1801 |
| 1500 | 1.17 | .0191 | 349 | .0323 | 568 | .0385 | 716 | .0560 | 1132 | .0905 | 1821 |
| 2000 | .875 | .0137 | 340 | .0263 | 569 | .0249 | 690 | .0400 | 1132 | .0639 | 1809 |
| 3000 | .583 | .0116 | 351 | .0186 | 570 | .0222 | 718 | .0322 | 1137 | .0523 | 1830 |
| 4000 | .438 | .0078 | 340 | .0151 | 570 | .0141 | 691 | .0227 | 1134 | .0363 | 1814 |
| 5000 | .350 | .0073 | 351 | .0135 | 571 | .0126 | 692 | .0202 | 1134 | .0324 | 1815 |
| 6000 | .292 | .0067 | 352 | .0122 | 571 | .0147 | 720 | .0212 | 1139 | .0345 | 1834 |
| 7500 | .233 | .0060 | 352 | .0108 | 571 | .0118 | 720 | .0171 | 1139 | .0278 | 1835 |
| 10000 | .175 | .0043 | 351 | .0080 | 571 | .0074 | 692 | .0019 | 1135 | .0190 | 1816 |
| 12000 | .146 | .0039 | 352 | .0073 | 571 | .0087 | 721 | .0126 | 1140 | .0205 | 1837 |
| 15000 | .117 | .0035 | 352 | .0062 | 571 | .0074 | 721 | .0107 | 1140 | .0174 | 1837 |
| 20000 | .0875 | .0030 | 351 | .0053 | 571 | .0048 | 692 | .0077 | 1136 | .0124 | 1817 |
| 24000 | .0729 | .0027 | 352 | .0048 | 571 | .0057 | 721 | .0082 | 1141 | .0134 | 1838 |
| 30000 | .0583 | .0023 | 352 | .0042 | 572 | .0050 | 721 | .0071 | 1141 | .0117 | 1838 |
| 40000 | .0438 | .0020 | 351 | .0035 | 572 | .0033 | 692 | .0052 | 1136 | .0083 | 1818 |
| 50000 | .0350 | .0017 | 351 | .0031 | 572 | .0028 | 692 | .0045 | 1136 | .0071 | 1818 |
| 60000 | .0292 | .0016 | 352 | .0029 | 572 | .0035 | 721 | .0050 | 1141 | .0081 | 1838 |
| 75000 | .0233 | .0014 | 352 | .0026 | 571 | .0028 | 721 | .0040 | 1141 | .0065 | 1838 |
| 80000 | .0219 | .0013 | 338 | .0027 | 567 | .0022 | 687 | .0035 | 1127 | .0056 | 1804 |
| 90000 | .0194 | .0013 | 352 | .0024 | 571 | .0026 | 721 | .0037 | 1141 | .0060 | 1838 |
| 100000 | .0175 | .0011 | 338 | .0023 | 567 | .0019 | 687 | .0030 | 1127 | .0049 | 1804 |
| 120000 | .0146 | .0010 | 338 | .0022 | 567 | .0018 | 687 | .0029 | 1127 | .0046 | 1804 |
| 150000 | .0117 | .0008 | 317 | .0019 | 548 | .0015 | 644 | .0027 | 1038 | .0039 | 1711 |
| 180000 | .0097 | .0008 | 317 | .0018 | 548 | .0014 | 644 | .0025 | 1038 | .0035 | 1711 |
| 216000 | .0081 | .0007 | 305 | .0016 | 518 | .0012 | 611 | .0020 | 1038 | .0027 | 1511 |
| **Low Speed Shaft Overhung Load** | | 700 Lbs. | | 860 Lbs. | | 1200 Lbs. | | 1265 Lbs. | | 1770 Lbs. | |

**Output speed and input HP ratings based on 1750 RPM input speed.*

*Note: At speeds above 1750 RPM, units may become thermally limited. For extended operation, limit input HP to 1750 RPM catalog rating.*

*All torque values listed in inch-pounds. The point of application of the overhung load is considered to be one shaft diameter measured outward from the gear case housing. See page 122 for extended bearing (Styles TFE, TFEM & TFEMQ) and input shaft overhung load (OHL) capacity.*

# Triple Reduction

## Worm / Worm / Worm Rating Table

| | | Size 226 | | Size 230 | | Size 232 | | Size 242 | | Size 252 | |
|---|---|---|---|---|---|---|---|---|---|---|---|
| Ratio | Output Speed (RPM)* | Input H.P.* | Output Torque (In. Lbs.) | Input H.P.* | Output Torque (In. Lbs.) | Input H.P.* | Output Torque (In. Lbs.) | Input H.P.* | Output Torque (In. Lbs.) | Input H.P.* | Output Torque (In. Lbs.) |
| 1000 | 1.75 | .136 | 2338 | .220 | 3666 | .291 | 4918 | .551 | 10458 | 1.06 | 19143 |
| 1500 | 1.17 | .101 | 2396 | .170 | 3736 | .239 | 5134 | .376 | 10517 | .764 | 19628 |
| 2000 | .875 | .0816 | 2400 | .140 | 3688 | .184 | 4949 | .325 | 10547 | .621 | 19712 |
| 3000 | .583 | .0572 | 2404 | .109 | 3758 | .153 | 5169 | .222 | 10576 | .490 | 19801 |
| 4000 | .438 | .0462 | 2406 | .0810 | 3700 | .107 | 4965 | .184 | 10592 | .360 | 19839 |
| 5000 | .350 | .0413 | 2407 | .0706 | 3767 | .0934 | 4968 | .154 | 10600 | .317 | 19919 |
| 6000 | .292 | .0372 | 2408 | .0635 | 3769 | .0898 | 5187 | .125 | 10607 | .288 | 19927 |
| 7500 | .233 | .0299 | 2408 | .0557 | 3771 | .0788 | 5190 | .105 | 10615 | .233 | 19961 |
| 10000 | .175 | .0241 | 2409 | .0420 | 3773 | .0550 | 4975 | .0931 | 10618 | .188 | 19980 |
| 12000 | .146 | .0219 | 2409 | .0378 | 3775 | .0537 | 5196 | .0726 | 10621 | .171 | 19990 |
| 15000 | .117 | .0186 | 2410 | .0329 | 3775 | .0467 | 5197 | .0621 | 10625 | .148 | 20002 |
| 20000 | .0875 | .0157 | 2410 | .0305 | 3776 | .0354 | 4978 | .0589 | 10627 | .122 | 20016 |
| 24000 | .0729 | .0142 | 2411 | .0275 | 3777 | .0391 | 5200 | .0472 | 10628 | .111 | 20024 |
| 30000 | .0583 | .0124 | 2411 | .0212 | 3779 | .0301 | 5200 | .0395 | 10631 | .0945 | 20029 |
| 40000 | .0438 | .0105 | 2411 | .0199 | 3777 | .0271 | 4979 | .0387 | 10631 | .0780 | 20030 |
| 50000 | .0350 | .0091 | 2411 | .0180 | 3777 | .0238 | 4979 | .0334 | 10631 | .0676 | 20030 |
| 60000 | .0292 | .0086 | 2411 | .0162 | 3779 | .0231 | 5202 | .0258 | 10631 | .0618 | 20039 |
| 75000 | .0233 | .0071 | 2346 | .0143 | 3779 | .0203 | 5202 | .0270 | 10606 | .0538 | 20039 |
| 80000 | .0219 | .0070 | 2393 | .0140 | 3682 | .0182 | 4941 | .0262 | 10551 | .0539 | 19801 |
| 90000 | .0194 | .0065 | 2346 | .0128 | 3779 | .0182 | 5202 | .0256 | 10606 | .0488 | 20039 |
| 100000 | .0175 | .0060 | 2393 | .0123 | 3682 | .0160 | 4941 | .0226 | 10551 | .0469 | 19801 |
| 120000 | .0146 | .0057 | 2393 | .0110 | 3682 | .0144 | 4941 | .0214 | 10551 | .0425 | 19801 |
| 150000 | .0117 | .0047 | 2250 | .0096 | 3622 | .0119 | 4665 | .0176 | 9930 | .0380 | 19210 |
| 180000 | .0097 | .0043 | 2250 | .0093 | 3622 | .0115 | 4665 | .0165 | 9930 | .0345 | 19210 |
| 216000 | .0081 | .0036 | 2088 | .0082 | 3438 | .0097 | 4341 | .0139 | 9215 | .0308 | 18232 |
| **Low Speed Shaft Overhung Load** | | 1625 Lbs. | | 2170 Lbs. | | 2275 Lbs. | | 3200 Lbs. | | 3560 Lbs. | |

**Output speed and input HP ratings based on 1750 RPM input speed.*

*Note: At speeds above 1750 RPM, units may become thermally limited. For extended operation, limit input HP to 1750 RPM catalog rating.*

*All torque values listed in inch-pounds. The point of application of the overhung load is considered to be one shaft diameter measured outward from the gear case housing. See page 122 for extended bearing (Styles TFE, TFEM & TFEMQ) and input shaft overhung load (OHL) capacity.*

# Triple Reduction

## Worm / Worm / Worm Rating Table

| | | Size 2600 | | Size 2700 | | Size 2800 | | Size 21000 | |
|---|---|---|---|---|---|---|---|---|---|
| Ratio | Output Speed (RPM)* | Input H.P.* | Output Torque (In. Lbs.) | Input H.P.* | Output Torque (In. Lbs.) | Input H.P.* | Output Torque (In. Lbs.) | Input H.P.* | Output Torque (In. Lbs.) |
| 1000 | 1.75 | 1.39 | 25846 | 1.61 | 34294 | 2.22 | 49201 | 3.88 | 87344 |
| 1500 | 1.17 | 1.02 | 26096 | 1.20 | 35310 | 1.61 | 49646 | 2.82 | 88338 |
| 2000 | .875 | .810 | 26222 | .949 | 35450 | 1.28 | 49870 | 2.27 | 88838 |
| 3000 | .583 | .560 | 26349 | .732 | 35591 | .909 | 50096 | 1.61 | 89342 |
| 4000 | .438 | .479 | 26413 | .555 | 35661 | .717 | 50210 | 1.29 | 89595 |
| 5000 | .350 | .421 | 26519 | .471 | 35703 | .605 | 50276 | 1.11 | 89747 |
| 6000 | .292 | .375 | 26476 | .431 | 35732 | .518 | 50323 | .931 | 89850 |
| 7500 | .233 | .330 | 26583 | .366 | 35757 | .441 | 50374 | .805 | 89950 |
| 10000 | .175 | .257 | 26614 | .284 | 35788 | .347 | 50412 | .631 | 90052 |
| 12000 | .146 | .234 | 26560 | .232 | 35800 | .307 | 50432 | .550 | 90100 |
| 15000 | .117 | .203 | 26644 | .223 | 35816 | .270 | 50465 | .478 | 90150 |
| 20000 | .0875 | .168 | 26666 | .183 | 35830 | .224 | 50475 | .395 | 90200 |
| 24000 | .0729 | .153 | 26610 | .149 | 35837 | .197 | 50490 | .356 | 90230 |
| 30000 | .0583 | .135 | 26680 | .146 | 35840 | .167 | 50505 | .298 | 90250 |
| 40000 | .0438 | .115 | 26687 | .115 | 35849 | .141 | 50510 | .276 | 90271 |
| 50000 | .0350 | .0966 | 26687 | .105 | 35849 | .120 | 50510 | .236 | 90271 |
| 60000 | .0292 | .0897 | 26687 | .0974 | 35849 | .109 | 50510 | .209 | 90271 |
| 75000 | .0233 | .0783 | 26687 | .0850 | 34958 | .0920 | 48811 | .176 | 87449 |
| 80000 | .0219 | .0768 | 26382 | .0762 | 34265 | .0863 | 47939 | .168 | 85428 |
| 90000 | .0194 | .0706 | 26687 | .0767 | 34958 | .0825 | 48811 | .163 | 87449 |
| 100000 | .0175 | .0673 | 26382 | .0669 | 34265 | .0734 | 47939 | .143 | 85428 |
| 120000 | .0146 | .0622 | 26382 | .0618 | 34265 | .0669 | 47939 | .127 | 85428 |
| 150000 | .0117 | .0555 | 25595 | .0531 | 33090 | .0582 | 46634 | .110 | 82880 |
| 180000 | .0097 | .0501 | 25595 | .0531 | 33090 | .0582 | 46634 | .102 | 82880 |
| 216000 | .0081 | .0449 | 24233 | .0380 | 29790 | .0412 | 41882 | .0814 | 75016 |
| **Low Speed Shaft Overhung Load** | | 3723 Lbs. | | 6209 Lbs. | | 7761 Lbs. | | 11028 Lbs. | |

**Output speed and input HP ratings based on 1750 RPM input speed.*

*Note: At speeds above 1750 RPM, units may become thermally limited. For extended operation, limit input HP to 1750 RPM catalog rating.*

*All torque values listed in inch-pounds. The point of application of the overhung load is considered to be one shaft diameter measured outward from the gear case housing. See page 122 for extended bearing (Styles TFE, TFEM & TFEMQ) and input shaft overhung load (OHL) capacity.*

# Triple Reduction

## Thrust, Overhung Load Ratings & Shipping Weights

### Thrust Ratings - *Triple Reduction Worm/Worm/Worm (LBS.)*

*Low Speed Shaft*

| Unit Size | 213 | 215 | 218 | 220 | 224 | 226 | 230 | 232 | 242 | 252 | 2600 | 2700 | 2800 | 21000 |
|---|---|---|---|---|---|---|---|---|---|---|---|---|---|---|
| All Ratios | 1144 | 1144 | 1144 | 1144 | 2091 | 2091 | 2574 | 2574 | 2533 | 3412 | 3990 | 4009 | 4777 | 6808 |

### Extended Bearing Design
### Output Shaft Overhung Load Capacity (LBS.)

| Unit Size | 230 | 232 | 242 | 252 | 2600 | 2700 | 2800 | 21000 |
|---|---|---|---|---|---|---|---|---|
| O.H.L. Capacity | 605 | 959 | 1200 | 2524 | 2245 | 3791 | 4850 | 8500 |

*O.H.L. = Overhung Load*
*Note: Load located at end of output shaft*

### High Speed Shaft Overhung Load Capacity (LBS.)

| Unit Size | 213 | 215 | 218 | 220 | 224 | 226 | 230 | 232 | 242 | 252 | 2600 | 2700 | 2800 | 21000 |
|---|---|---|---|---|---|---|---|---|---|---|---|---|---|---|
| O.H.L. Capacity | 75 | 75 | 75 | 75 | 75 | 75 | 75 | 75 | 75 | 75 | 75 | 75 | 75 | 125 |

*O.H.L. = Overhung Load*
*Note: The point of application of the overhung load is considered to be one shaft diameter measured outward from the gear case housing.*

### Worm/Worm/Worm Approximate Shipping Weights (LBS.)

| Style | 213 | 215 | 218 | 220 | 224 | 226 | 230 | 232 | 242 | 252 | 2600 | 2700 | 2800 | 21000 |
|---|---|---|---|---|---|---|---|---|---|---|---|---|---|---|
| TT | 42 | 47 | 50 | 52 | 66 | 79 | 104 | 115 | 169 | 297 | 409 | 498 | 745 | 1187 |
| TTM | 54 | 59 | 62 | 64 | 80 | 93 | 118 | 129 | 183 | 313 | 431 | 520 | 770 | 1218 |
| TTMQ | 46 | 51 | 54 | 56 | 72 | 85 | 110 | 120 | 175 | 308 | 415 | 504 | 758 | 1210 |
| TU | 42 | 47 | 50 | 52 | 66 | 79 | 104 | 115 | 169 | 297 | 409 | 498 | 745 | 1187 |
| TUM | 54 | 59 | 62 | 64 | 80 | 93 | 118 | 129 | 183 | 313 | 431 | 520 | 770 | 1218 |
| TUMQ | 46 | 51 | 54 | 56 | 72 | 85 | 110 | 120 | 175 | 308 | 415 | 504 | 758 | 1210 |
| TVL | 43 | 49 | 51 | 60 | 74 | 90 | 118 | 129 | 205 | 332 | 447 | 569 | 823 | 1343 |
| TVLM | 55 | 61 | 63 | 72 | 88 | 104 | 132 | 143 | 219 | 348 | 454 | 576 | 830 | 1352 |
| TVLMQ | 47 | 53 | 55 | 64 | 80 | 100 | 124 | 137 | 211 | 343 | 449 | 571 | 826 | 1351 |
| TVH | 43 | 49 | 51 | 60 | 74 | 90 | 118 | 129 | 205 | 332 | 447 | 569 | 823 | 1343 |
| TVHM | 55 | 61 | 63 | 72 | 88 | 104 | 132 | 143 | 219 | 348 | 454 | 576 | 830 | 1352 |
| TVHMQ | 47 | 53 | 55 | 64 | 80 | 100 | 124 | 137 | 211 | 343 | 449 | 571 | 826 | 1351 |
| TF | 42 | 47 | 50 | 56 | 76 | 89 | 120 | 131 | 189 | 315 | 432 | 513 | 763 | 1208 |
| TFM | 49 | 54 | 57 | 63 | 83 | 96 | 127 | 138 | 196 | 322 | 439 | 520 | 770 | 1217 |
| TFMQ | 45 | 50 | 53 | 59 | 79 | 92 | 123 | 134 | 192 | 318 | 434 | 515 | 766 | 1216 |

# Dimension Sheet Index
# Triple Reduction Worm/Worm/Worm


| Style | Page |
|---|---|
| TT | 124 - 125 |
| TTM,TTMQ | 124 - 125 |
| TU | 126 - 127 |
| TUM,TUMQ | 126 - 127 |
| TV*(L or H)* | 128 - 129 |
| TV*(L or H)*M,TV*(L or H)*MQ | 128 - 129 |
| TF | 130 - 131 |
| TFM,TFMQ | 130 - 131 |


Contact factory for dimensions of styles not listed.

Note: All dimensions shown in dimension sheets are for reference only.
Contact factory for certified dimensions.

WARNING For safety, purchaser or user should provide protective guards over shaft extensions and any couplings, sheaves and belts, sprockets and chains, etc., mounted thereon.

# *Triple Reduction*

## Worm / Worm / Worm Dimensions

### Style TT

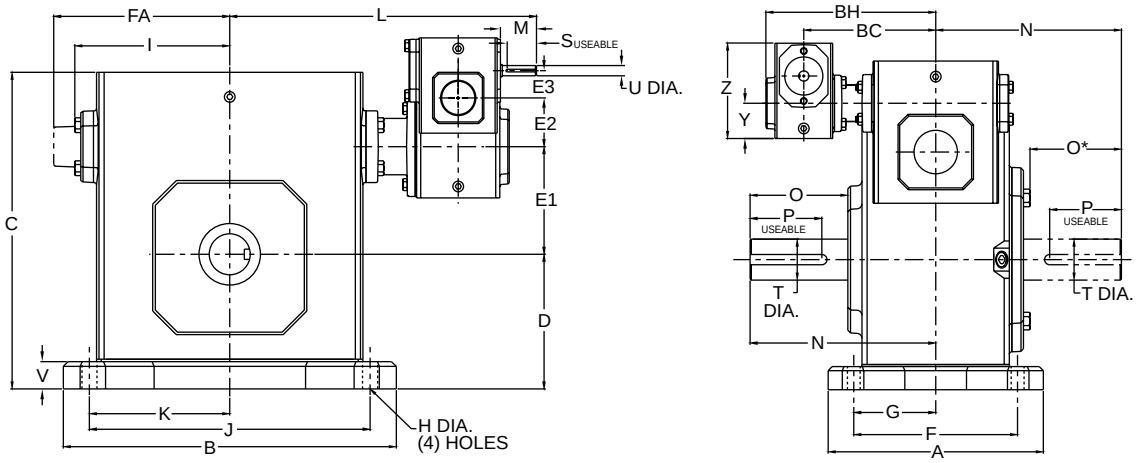


### Styles TTMQ & TTM

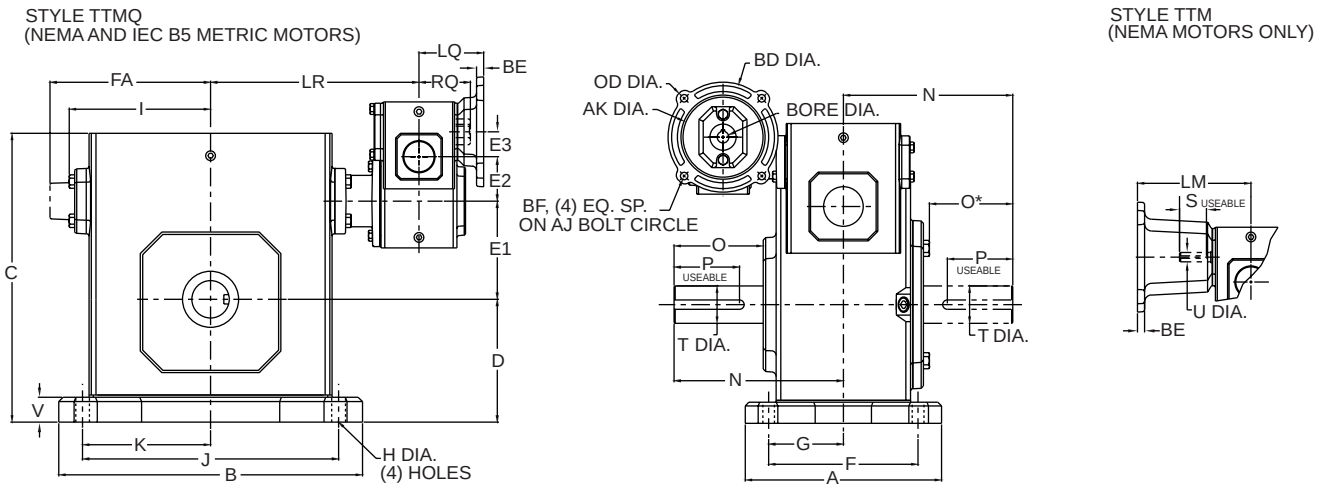


*Note: The input shaft may be rotated in either direction. Units are for mounting as shown. Contact factory for other mountings or assembly position options.*

# Triple Reduction

## Styles TT, TTMQ & TTM

| UNIT | A | B | BC | BH | C | D | E1 | E2 | E3 | F | FA | G | H Dia. | I | J | K | L | LR | M | N | O | O* |
|---|---|---|---|---|---|---|---|---|---|---|---|---|---|---|---|---|---|---|---|---|---|---|
| | | | | | | | | | | 4.38 | | 2.19 | | | | | | | | | | |
| 213 | 5.38 | 5.37 | 5.32 | 7.16 | 5.19 | 2.25 | 1.333 | 1.333 | 1.333 | 3.31 | N/A | 1.66 | .34 | 2.61 | 4.37 | 2.19 | 9.14 | 5.32 | 1.76 | 4.00 | 2.16 | 1.94 |
| 215 | 5.56 | 6.50 | 5.32 | 7.16 | 5.97 | 2.50 | 1.540 | 1.333 | 1.333 | 4.31 | N/A | 2.16 | .41 | 3.14 | 5.25 | 2.63 | 9.67 | 5.85 | 1.76 | 4.31 | 2.11 | 1.90 |
| 218 | 5.75 | 6.99 | 5.32 | 7.16 | 6.44 | 2.75 | 1.750 | 1.333 | 1.333 | 4.50 | N/A | 2.25 | .41 | 3.24 | 5.75 | 2.88 | 9.77 | 5.94 | 1.76 | 4.31 | 2.05 | 1.84 |
| 220 | 6.00 | 7.69 | 5.32 | 7.16 | 7.09 | 3.00 | 2.063 | 1.333 | 1.333 | 4.69 | N/A | 2.34 | .47 | 3.61 | 6.38 | 3.19 | 10.14 | 6.32 | 1.76 | 4.68 | 2.29 | 2.08 |
| 224 | 6.19 | 8.37 | 5.32 | 7.16 | 7.69 | 3.25 | 2.375 | 1.333 | 1.333 | 4.88 | N/A | 2.44 | .47 | 3.77 | 7.06 | 3.53 | 10.27 | 6.44 | 1.76 | 5.14 | 2.66 | 2.44 |
| 226 | 6.50 | 9.25 | 5.32 | 7.16 | 8.75 | 3.69 | 2.625 | 1.333 | 1.333 | 5.25 | N/A | 2.63 | .53 | 4.34 | 8.00 | 4.00 | 10.83 | 7.01 | 1.76 | 5.63 | 2.73 | 2.52 |
| 230 | 7.50 | 10.00 | 5.85 | 7.69 | 9.63 | 4.00 | 3.000 | 1.540 | 1.333 | 5.88 | N/A | 2.94 | .53 | 4.84 | 8.44 | 4.22 | 11.69 | 7.86 | 1.76 | 6.75 | 3.60 | 3.36 |
| 232 | 7.75 | 11.12 | 5.85 | 7.69 | 10.25 | 4.38 | 3.250 | 1.540 | 1.333 | 6.13 | N/A | 3.06 | .53 | 5.02 | 9.50 | 4.75 | 11.87 | 8.05 | 1.76 | 7.06 | 3.66 | 3.42 |
| 242 | 9.75 | 13.24 | 6.32 | 8.16 | 12.38 | 5.44 | 4.250 | 2.063 | 1.333 | 7.63 | N/A | 3.81 | .66 | 6.10 | 11.12 | 5.56 | 13.00 | 9.18 | 1.76 | 8.12 | 4.50 | 4.21 |
| 252 | 10.50 | 16.24 | 7.01 | 8.85 | 15.13 | 6.25 | 5.250 | 2.625 | 1.333 | 8.38 | N/A | 4.19 | .78 | 7.50 | 14.12 | 7.06 | 15.40 | 11.57 | 1.76 | 9.06 | 4.78 | 4.53 |
| 2600 | 12.00 | 18.99 | 8.05 | 10.25 | 17.75 | 7.75 | 6.000 | 3.250 | 1.540 | 9.50 | 10.24 | 4.75 | .91 | N/A | 16.49 | 8.25 | 17.65 | 13.30 | 1.76 | 10.00 | 4.66 | 4.66 |
| 2700 | 13.38 | 15.38 | 8.05 | 10.25 | 20.33 | 9.00 | 7.000 | 3.250 | 1.540 | 11.25 | 10.63 | 5.63 | 1.13 | N/A | 13.00 | 6.50 | 17.31 | 12.96 | 1.76 | 11.76 | 5.69 | 5.69 |
| 2800 | 13.50 | 17.37 | 9.18 | 11.57 | 22.61 | 10.50 | 8.000 | 4.250 | 2.063 | 11.50 | 11.93 | 5.75 | 1.13 | N/A | 14.75 | 7.38 | 18.77 | 13.94 | 1.76 | 12.25 | 6.02 | 6.02 |
| 21000 | 16.88 | 21.24 | 11.57 | 14.47 | 27.12 | 12.00 | 10.000 | 5.250 | 2.625 | 14.00 | 14.34 | 7.00 | 1.44 | N/A | 17.00 | 8.50 | 23.13 | 17.05 | 2.38 | 14.75 | 6.80 | 6.80 |

| UNIT | P** | S** | T Dia. | U Dia. | V | Y | Z |
|---|---|---|---|---|---|---|---|
| 213 | 3/16 x 1.50 | 1/8 x 1.44 | .625 | .500 | .53 | 1.72 | 4.66 |
| 215 | 3/16 x 1.50 | 1/8 x 1.44 | .750 | .500 | .59 | 1.72 | 4.66 |
| 218 | 3/16 x 1.38 | 1/8 x 1.44 | .875 | .500 | .69 | 1.72 | 4.66 |
| 220 | 1/4 x 1.44 | 1/8 x 1.44 | 1.000 | .500 | .72 | 1.72 | 4.66 |
| 224 | 1/4 x 1.75 | 1/8 x 1.44 | 1.125 | .500 | .75 | 1.72 | 4.66 |
| 226 | 1/4 x 2.00 | 1/8 x 1.44 | 1.250 | .500 | .75 | 1.72 | 4.66 |
| 230 | 1/4 X 2.25 | 1/8 x 1.44 | 1.250 | .500 | .75 | 1.72 | 4.66 |
| 232 | 3/8 X 2.62 | 1/8 x 1.44 | 1.500 | .500 | .88 | 1.72 | 4.66 |
| 242 | 1/2 X 3.06 | 1/8 x 1.44 | 1.875 | .500 | 1.00 | 1.72 | 4.66 |
| 252 | 1/2 x 3.50 | 1/8 x 1.44 | 2.000 | .500 | 1.13 | 1.72 | 4.66 |
| 2600 | 5/8 x 4.00 | 3/16 x 1.50 | 2.500 | .625 | 1.25 | 1.91 | 5.38 |
| 2700 | 5/8 x 4.00 | 3/16 x 1.50 | 2.750 | .625 | 1.42 | 1.91 | 5.38 |
| 2800 | 3/4 x 4.50 | 3/16 x 1.50 | 3.000 | .625 | 1.65 | 2.28 | 6.38 |
| 21000 | 7/8 x 5.00 | 3/16 x 1.75 | 3.750 | .750 | 1.65 | 2.94 | 8.00 |

**applies to double output shaft*
***keyway width by length*

*Note: All dimensions listed are for reference only. Contact factory for certified dimensions.*

WARNING *For safety, purchaser or user should provide protective guards over shaft extensions and any couplings, sheaves and belts, sprockets and chains, etc., mounted thereon.*

## NEMA Motor Data

### NEMA Motor Mounting Dimensions

| Frame | AJ | AK | BD | OD | BE | BORE | KWY.** | BF |
|---|---|---|---|---|---|---|---|---|
| 48CZ | 3.75 | 3.00 | 3.88 | 4.36 | .38 | .500 | 1/8 x 1/16 | .28 |
| 56C | 5.88 | 4.50 | 5.88 | 6.64 | .38 | .625 | 3/16 x 3/32 | .41 |
| 140TC | 5.88 | 4.50 | 5.88 | 6.64 | .38 | .875 | 3/16 x 3/32 | .41 |
| 180TC | 7.25 | 8.50 | 9.00 | N/A | N/A | 1.125 | 1/4 x 1/8 | .53 |
| 210TC | 7.25 | 8.50 | 9.00 | N/A | N/A | 1.375 | 5/16 x 5/32 | .53 |

***keyway width by depth*

### NEMA Motor Flange Face Locations

| | 48CZ | | | 56C/140TC | | | 180TC | | | 210TC | | |
|---|---|---|---|---|---|---|---|---|---|---|---|---|
| UNIT | LM | RQ | LQ | LM | RQ | LQ | LM | RQ | LQ | LM | RQ | LQ |
| 213 | 5.63 | 3.09 | 3.46 | 6.07 | 3.09 | 3.46 | N/A | N/A | N/A | N/A | N/A | N/A |
| 215 | 5.63 | 3.09 | 3.46 | 6.07 | 3.09 | 3.46 | N/A | N/A | N/A | N/A | N/A | N/A |
| 218 | 5.63 | 3.09 | 3.46 | 6.07 | 3.09 | 3.46 | N/A | N/A | N/A | N/A | N/A | N/A |
| 220 | 5.63 | 3.09 | 3.46 | 6.07 | 3.09 | 3.46 | N/A | N/A | N/A | N/A | N/A | N/A |
| 224 | 5.63 | 3.09 | 3.46 | 6.07 | 3.09 | 3.46 | N/A | N/A | N/A | N/A | N/A | N/A |
| 226 | 5.63 | 3.09 | 3.46 | 6.07 | 3.09 | 3.46 | N/A | N/A | N/A | N/A | N/A | N/A |
| 230 | 5.63 | 3.09 | 3.46 | 6.07 | 3.09 | 3.46 | N/A | N/A | N/A | N/A | N/A | N/A |
| 232 | 5.63 | 3.09 | 3.46 | 6.07 | 3.09 | 3.46 | N/A | N/A | N/A | N/A | N/A | N/A |
| 242 | 5.63 | 3.09 | 3.46 | 6.07 | 3.09 | 3.46 | N/A | N/A | N/A | N/A | N/A | N/A |
| 252 | 5.63 | 3.09 | 3.46 | 6.07 | 3.09 | 3.46 | N/A | N/A | N/A | N/A | N/A | N/A |
| 2600 | 6.16 | 3.62 | 3.99 | 6.60 | 3.62 | 3.99 | N/A | N/A | N/A | N/A | N/A | N/A |
| 2700 | 6.16 | 3.62 | 3.99 | 6.60 | 3.62 | 3.99 | N/A | N/A | N/A | N/A | N/A | N/A |
| 2800 | 6.63 | 4.06 | 4.46 | 7.07 | 4.06 | 4.46 | N/A | N/A | N/A | N/A | N/A | N/A |
| 21000 | N/A | N/A | N/A | 8.32 | 4.82 | 5.19 | 9.32 | 5.13 | 5.62 | 9.32 | N/A | N/A |

### IEC B5 & B3/B5 Metric Motor Flange Face Locations

| | D63D | | D71D | | D80D | | D90D | | D100LD D112MD | |
|---|---|---|---|---|---|---|---|---|---|---|
| UNIT | LQ | RQ | LQ | RQ | LQ | RQ | LQ | RQ | LQ | RQ |
| 213 | 2.62 | 2.45 | 2.65 | 2.47 | 2.89 | 2.71 | N/A | N/A | N/A | N/A |
| 215 | 2.62 | 2.45 | 2.65 | 2.47 | 2.89 | 2.71 | N/A | N/A | N/A | N/A |
| 218 | 2.62 | 2.45 | 2.65 | 2.47 | 2.89 | 2.71 | N/A | N/A | N/A | N/A |
| 220 | 2.62 | 2.45 | 2.65 | 2.47 | 2.89 | 2.71 | N/A | N/A | N/A | N/A |
| 224 | 2.62 | 2.45 | 2.65 | 2.47 | 2.89 | 2.71 | N/A | N/A | N/A | N/A |
| 226 | 2.62 | 2.45 | 2.65 | 2.47 | 2.89 | 2.71 | N/A | N/A | N/A | N/A |
| 230 | 2.62 | 2.45 | 2.65 | 2.47 | 2.89 | 2.71 | N/A | N/A | N/A | N/A |
| 232 | 2.62 | 2.45 | 2.65 | 2.47 | 2.89 | 2.71 | N/A | N/A | N/A | N/A |
| 242 | 2.62 | 2.45 | 2.65 | 2.47 | 2.89 | 2.71 | N/A | N/A | N/A | N/A |
| 252 | 2.62 | 2.45 | 2.65 | 2.47 | 2.89 | 2.71 | N/A | N/A | N/A | N/A |
| 2600 | 3.15 | 2.98 | 3.18 | 3.00 | 3.42 | 3.24 | N/A | N/A | N/A | N/A |
| 2700 | 3.15 | 2.98 | 3.18 | 3.00 | 3.42 | 3.24 | N/A | N/A | N/A | N/A |
| 2800 | 3.62 | 3.43 | 3.65 | 3.44 | 3.89 | 3.68 | N/A | N/A | N/A | N/A |
| 21000 | N/A | N/A | 4.28 | 4.09 | 4.90 | 4.72 | 4.90 | 4.72 | 5.30 | 5.07 |

## Metric Motor Data

### IEC B5 & B3/B5 Metric Motor Mounting Dimensions

*(All dimensions given in millimeters)*

| Frame | AJ | AK | BD | OD | BE | BORE | KWY.** | BF TAP |
|---|---|---|---|---|---|---|---|---|
| D63D | 115 | 95 | 117 | 131 | 10 | 11 | 4 x 2 | M8 x 1.25 |
| D71D | 130 | 110 | 132 | 146 | 11 | 14 | 5 x 2.5 | M8 x 1.25 |
| D80D | 165 | 130 | 165 | 184 | 15 | 19 | 6 x 3 | M10 x 1.50 |
| D90D | 165 | 130 | 165 | 184 | 15 | 24 | 8 x 3.5 | M10 x 1.50 |
| D100LD* | 215 | 180 | 216 | 237 | 18 | 28 | 8 x 3.5 | M12 x 1.75 |

**also applies to D112MD*
***keyway width by depth*

# Triple Reduction

## Worm / Worm / Worm Dimensions

### Style TU

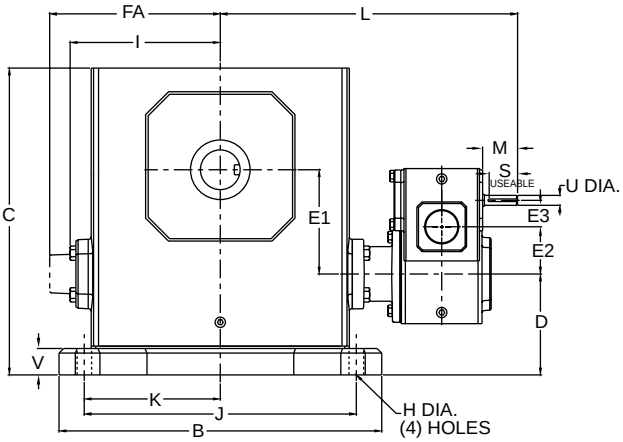


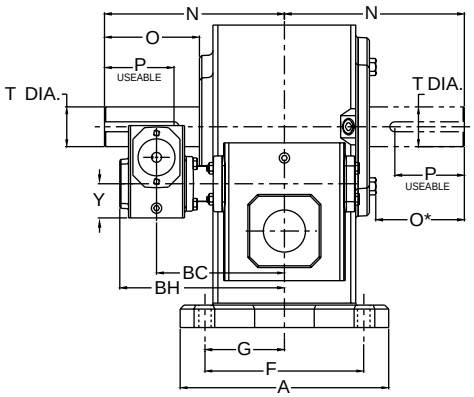


### Styles TUMQ & TUM

STYLE TUMQ
(NEMA AND IEC B5 METRIC MOTORS)

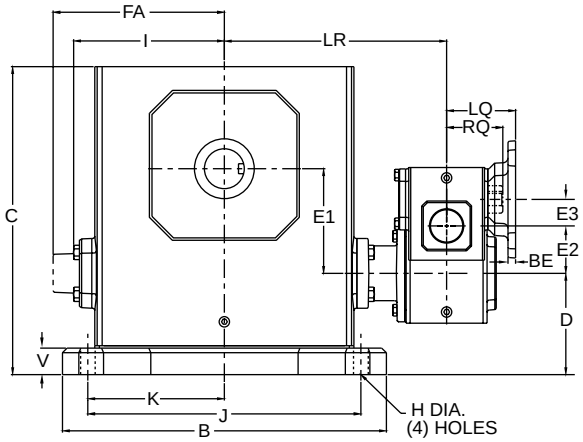


STYLE TUM
(NEMA MOTORS ONLY)

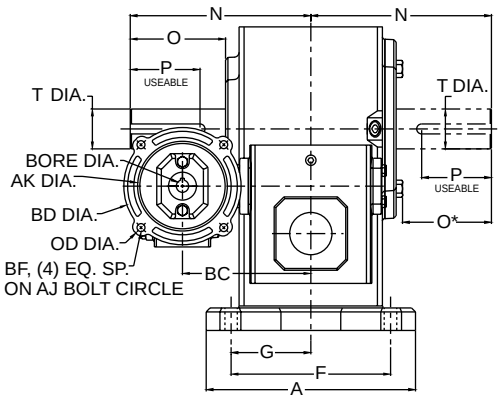


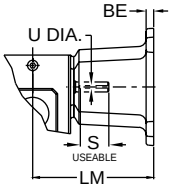


*Note: The input shaft may be rotated in either direction. Units are for mounting as shown. Contact factory for other mountings or assembly position options.*

# Triple Reduction

## Styles TU, TUMQ & TUM

| UNIT | A | B | BC | BH | C | D | E1 | E2 | E3 | F | FA | G | H Dia. | I | J | K | L | LR | M | N | O | O* |
|---|---|---|---|---|---|---|---|---|---|---|---|---|---|---|---|---|---|---|---|---|---|---|
| | | | | | | | | | | 4.38 | | 2.19 | | | | | | | | | | |
| 213 | 5.38 | 5.37 | 5.32 | 7.16 | 5.19 | 2.14 | 1.333 | 1.333 | 1.333 | 3.31 | N/A | 1.66 | .34 | 2.61 | 4.37 | 2.19 | 9.14 | 5.32 | 1.76 | 4.00 | 2.16 | 1.94 |
| 215 | 5.56 | 6.50 | 5.32 | 7.16 | 5.97 | 2.52 | 1.540 | 1.333 | 1.333 | 4.31 | N/A | 2.16 | .41 | 3.14 | 5.25 | 2.63 | 9.67 | 5.85 | 1.76 | 4.31 | 2.11 | 1.90 |
| 218 | 5.75 | 6.99 | 5.32 | 7.16 | 6.44 | 2.63 | 1.750 | 1.333 | 1.333 | 4.50 | N/A | 2.25 | .41 | 3.24 | 5.75 | 2.88 | 9.77 | 5.94 | 1.76 | 4.31 | 2.05 | 1.84 |
| 220 | 6.00 | 7.69 | 5.32 | 7.16 | 7.09 | 2.75 | 2.063 | 1.333 | 1.333 | 4.69 | N/A | 2.34 | .47 | 3.61 | 6.38 | 3.19 | 10.14 | 6.32 | 1.76 | 4.68 | 2.29 | 2.08 |
| 224 | 6.19 | 8.37 | 5.32 | 7.16 | 7.69 | 2.81 | 2.375 | 1.333 | 1.333 | 4.88 | N/A | 2.44 | .47 | 3.77 | 7.06 | 3.53 | 10.27 | 6.44 | 1.76 | 5.14 | 2.66 | 2.44 |
| 226 | 6.50 | 9.25 | 5.32 | 7.16 | 8.75 | 3.19 | 2.625 | 1.333 | 1.333 | 5.25 | N/A | 2.63 | .53 | 4.34 | 8.00 | 4.00 | 10.83 | 7.01 | 1.76 | 5.63 | 2.73 | 2.52 |
| 230 | 7.50 | 10.00 | 5.85 | 7.69 | 9.63 | 3.38 | 3.000 | 1.540 | 1.333 | 5.88 | N/A | 2.94 | .53 | 4.84 | 8.44 | 4.22 | 11.69 | 7.86 | 1.76 | 6.75 | 3.60 | 3.36 |
| 232 | 7.75 | 11.12 | 5.85 | 7.69 | 10.25 | 3.50 | 3.250 | 1.540 | 1.333 | 6.13 | N/A | 3.06 | .53 | 5.02 | 9.50 | 4.75 | 11.87 | 8.05 | 1.76 | 7.06 | 3.66 | 3.42 |
| 242 | 9.75 | 13.24 | 6.32 | 8.16 | 12.38 | 3.69 | 4.250 | 2.063 | 1.333 | 7.63 | N/A | 3.81 | .66 | 6.10 | 11.12 | 5.56 | 13.00 | 9.18 | 1.76 | 8.12 | 4.50 | 4.21 |
| 252 | 10.50 | 16.24 | 7.01 | 8.85 | 15.13 | 4.76 | 5.250 | 2.625 | 1.333 | 8.38 | N/A | 4.19 | .78 | 7.50 | 14.12 | 7.06 | 15.40 | 11.57 | 1.76 | 9.06 | 4.78 | 4.53 |
| 2600 | 12.00 | 18.99 | 8.05 | 10.25 | 17.75 | 5.25 | 6.000 | 3.250 | 1.540 | 9.50 | 10.24 | 4.75 | .91 | N/A | 16.49 | 8.25 | 17.65 | 13.30 | 1.76 | 10.00 | 4.66 | 4.66 |
| 2700 | 13.38 | 15.38 | 8.05 | 10.25 | 20.33 | 5.74 | 7.000 | 3.250 | 1.540 | 11.25 | 10.63 | 5.63 | 1.13 | N/A | 13.00 | 6.50 | 17.31 | 12.96 | 1.76 | 11.76 | 5.69 | 5.69 |
| 2800 | 13.50 | 17.37 | 9.18 | 11.57 | 22.61 | 5.75 | 8.000 | 4.250 | 2.063 | 11.50 | 11.93 | 5.75 | 1.13 | N/A | 14.75 | 7.38 | 18.77 | 13.94 | 1.76 | 12.25 | 6.02 | 6.02 |
| 21000 | 16.88 | 21.24 | 11.57 | 14.47 | 27.12 | 6.76 | 10.000 | 5.250 | 2.625 | 14.00 | 14.34 | 7.00 | 1.44 | N/A | 17.00 | 8.50 | 23.13 | 17.05 | 2.38 | 14.75 | 6.80 | 6.80 |

| UNIT | P** | S** | T Dia. | U Dia. | V | Y |
|---|---|---|---|---|---|---|
| 213 | 3/16 x 1.50 | 1/8 x 1.44 | .625 | .500 | .53 | 1.72 |
| 215 | 3/16 x 1.50 | 1/8 x 1.44 | .750 | .500 | .59 | 1.72 |
| 218 | 3/16 x 1.38 | 1/8 x 1.44 | .875 | .500 | .69 | 1.72 |
| 220 | 1/4 x 1.44 | 1/8 x 1.44 | 1.000 | .500 | .72 | 1.72 |
| 224 | 1/4 x 1.75 | 1/8 x 1.44 | 1.125 | .500 | .75 | 1.72 |
| 226 | 1/4 x 2.00 | 1/8 x 1.44 | 1.250 | .500 | .75 | 1.72 |
| 230 | 1/4 X 2.25 | 1/8 x 1.44 | 1.250 | .500 | .75 | 1.72 |
| 232 | 3/8 X 2.62 | 1/8 x 1.44 | 1.500 | .500 | .88 | 1.72 |
| 242 | 1/2 X 3.06 | 1/8 x 1.44 | 1.875 | .500 | 1.00 | 1.72 |
| 252 | 1/2 x 3.50 | 1/8 x 1.44 | 2.000 | .500 | 1.13 | 1.72 |
| 2600 | 5/8 x 4.00 | 3/16 x 1.50 | 2.500 | .625 | 1.25 | 1.91 |
| 2700 | 5/8 x 4.00 | 3/16 x 1.50 | 2.750 | .625 | 1.42 | 1.91 |
| 2800 | 3/4 x 4.50 | 3/16 x 1.50 | 3.000 | .625 | 1.65 | 2.28 |
| 21000 | 7/8 x 5.00 | 3/16 x 1.75 | 3.750 | .750 | 1.65 | 2.94 |

**applies to double output shaft*
***keyway width by length*

*Note: All dimensions listed are for reference only. Contact factory for certified dimensions.*

WARNING *For safety, purchaser or user should provide protective guards over shaft extensions and any couplings, sheaves and belts, sprockets and chains, etc., mounted thereon.*

## NEMA Motor Data

### NEMA Motor Mounting Dimensions

| Frame | AJ | AK | BD | OD | BE | BORE | KWY.** | BF |
|---|---|---|---|---|---|---|---|---|
| 48CZ | 3.75 | 3.00 | 3.88 | 4.36 | .38 | .500 | 1/8 x 1/16 | .28 |
| 56C | 5.88 | 4.50 | 5.88 | 6.64 | .38 | .625 | 3/16 x 3/32 | .41 |
| 140TC | 5.88 | 4.50 | 5.88 | 6.64 | .38 | .875 | 3/16 x 3/32 | .41 |
| 180TC | 7.25 | 8.50 | 9.00 | N/A | N/A | 1.125 | 1/4 x 1/8 | .53 |
| 210TC | 7.25 | 8.50 | 9.00 | N/A | N/A | 1.375 | 5/16 x 5/32 | .53 |

***keyway width by depth*

### NEMA Motor Flange Face Locations

| | 48CZ | | | 56C/140TC | | | 180TC | | | 210TC | | |
|---|---|---|---|---|---|---|---|---|---|---|---|---|
| UNIT | LM | RQ | LQ | LM | RQ | LQ | LM | RQ | LQ | LM | RQ | LQ |
| 213 | 5.63 | 3.09 | 3.46 | 6.07 | 3.09 | 3.46 | N/A | N/A | N/A | N/A | N/A | N/A |
| 215 | 5.63 | 3.09 | 3.46 | 6.07 | 3.09 | 3.46 | N/A | N/A | N/A | N/A | N/A | N/A |
| 218 | 5.63 | 3.09 | 3.46 | 6.07 | 3.09 | 3.46 | N/A | N/A | N/A | N/A | N/A | N/A |
| 220 | 5.63 | 3.09 | 3.46 | 6.07 | 3.09 | 3.46 | N/A | N/A | N/A | N/A | N/A | N/A |
| 224 | 5.63 | 3.09 | 3.46 | 6.07 | 3.09 | 3.46 | N/A | N/A | N/A | N/A | N/A | N/A |
| 226 | 5.63 | 3.09 | 3.46 | 6.07 | 3.09 | 3.46 | N/A | N/A | N/A | N/A | N/A | N/A |
| 230 | 5.63 | 3.09 | 3.46 | 6.07 | 3.09 | 3.46 | N/A | N/A | N/A | N/A | N/A | N/A |
| 232 | 5.63 | 3.09 | 3.46 | 6.07 | 3.09 | 3.46 | N/A | N/A | N/A | N/A | N/A | N/A |
| 242 | 5.63 | 3.09 | 3.46 | 6.07 | 3.09 | 3.46 | N/A | N/A | N/A | N/A | N/A | N/A |
| 252 | 5.63 | 3.09 | 3.46 | 6.07 | 3.09 | 3.46 | N/A | N/A | N/A | N/A | N/A | N/A |
| 2600 | 6.16 | 3.62 | 3.99 | 6.60 | 3.62 | 3.99 | N/A | N/A | N/A | N/A | N/A | N/A |
| 2700 | 6.16 | 3.62 | 3.99 | 6.60 | 3.62 | 3.99 | N/A | N/A | N/A | N/A | N/A | N/A |
| 2800 | 6.63 | 4.06 | 4.46 | 7.07 | 4.06 | 4.46 | N/A | N/A | N/A | N/A | N/A | N/A |
| 21000 | N/A | N/A | N/A | 8.32 | 4.82 | 5.19 | 9.32 | 5.13 | 5.62 | 9.32 | N/A | N/A |

### IEC B5 & B3/B5 Metric Motor Flange Face Locations

| | D63D | | D71D | | D80D | | D90D | | D100LD D112MD | |
|---|---|---|---|---|---|---|---|---|---|---|
| UNIT | LQ | RQ | LQ | RQ | LQ | RQ | LQ | RQ | LQ | RQ |
| 213 | 2.62 | 2.45 | 2.65 | 2.47 | 2.89 | 2.71 | N/A | N/A | N/A | N/A |
| 215 | 2.62 | 2.45 | 2.65 | 2.47 | 2.89 | 2.71 | N/A | N/A | N/A | N/A |
| 218 | 2.62 | 2.45 | 2.65 | 2.47 | 2.89 | 2.71 | N/A | N/A | N/A | N/A |
| 220 | 2.62 | 2.45 | 2.65 | 2.47 | 2.89 | 2.71 | N/A | N/A | N/A | N/A |
| 224 | 2.62 | 2.45 | 2.65 | 2.47 | 2.89 | 2.71 | N/A | N/A | N/A | N/A |
| 226 | 2.62 | 2.45 | 2.65 | 2.47 | 2.89 | 2.71 | N/A | N/A | N/A | N/A |
| 230 | 2.62 | 2.45 | 2.65 | 2.47 | 2.89 | 2.71 | N/A | N/A | N/A | N/A |
| 232 | 2.62 | 2.45 | 2.65 | 2.47 | 2.89 | 2.71 | N/A | N/A | N/A | N/A |
| 242 | 2.62 | 2.45 | 2.65 | 2.47 | 2.89 | 2.71 | N/A | N/A | N/A | N/A |
| 252 | 2.62 | 2.45 | 2.65 | 2.47 | 2.89 | 2.71 | N/A | N/A | N/A | N/A |
| 2600 | 3.15 | 2.98 | 3.18 | 3.00 | 3.42 | 3.24 | N/A | N/A | N/A | N/A |
| 2700 | 3.15 | 2.98 | 3.18 | 3.00 | 3.42 | 3.24 | N/A | N/A | N/A | N/A |
| 2800 | 3.62 | 3.43 | 3.65 | 3.44 | 3.89 | 3.68 | N/A | N/A | N/A | N/A |
| 21000 | N/A | N/A | 4.28 | 4.09 | 4.90 | 4.72 | 4.90 | 4.72 | 5.30 | 5.07 |

*Note: Metric motor flanges are available in quill style (TUMQ) only.*

## Metric Motor Data

### IEC B5 & B3/B5 Metric Motor Mounting Dimensions

*(All dimensions given in millimeters)*

| Frame | AJ | AK | BD | OD | BE | BORE | KWY.** | BF TAP |
|---|---|---|---|---|---|---|---|---|
| D63D | 115 | 95 | 117 | 131 | 10 | 11 | 4 x 2 | M8 x 1.25 |
| D71D | 130 | 110 | 132 | 146 | 11 | 14 | 5 x 2.5 | M8 x 1.25 |
| D80D | 165 | 130 | 165 | 184 | 15 | 19 | 6 x 3 | M10 x 1.50 |
| D90D | 165 | 130 | 165 | 184 | 15 | 24 | 8 x 3.5 | M10 x 1.50 |
| D100LD* | 215 | 180 | 216 | 237 | 18 | 28 | 8 x 3.5 | M12 x 1.75 |

**also applies to D112MD*
***keyway width by depth*

# *Triple Reduction*

## Worm / Worm / Worm Dimensions

### Style TV*(L or H)*

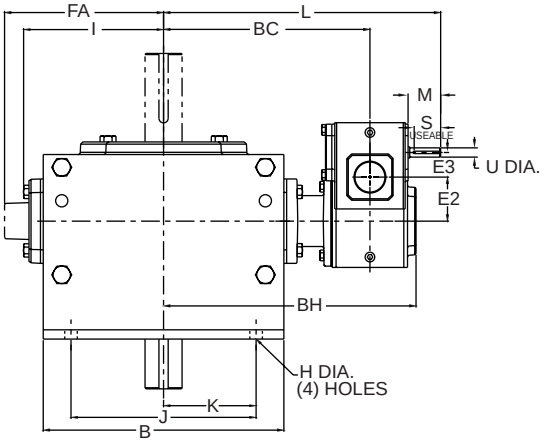


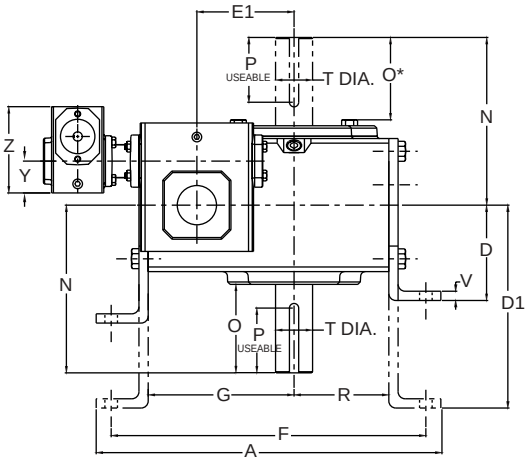


### Styles TV*(L or H)*MQ &TV*(L or H)*M

STYLE TV*(L or H)*MQ
(NEMA AND IEC B5 METRIC MOTORS)

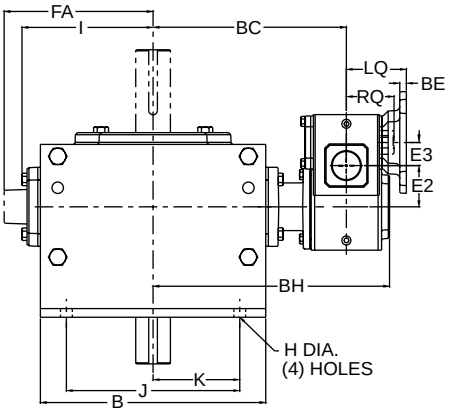


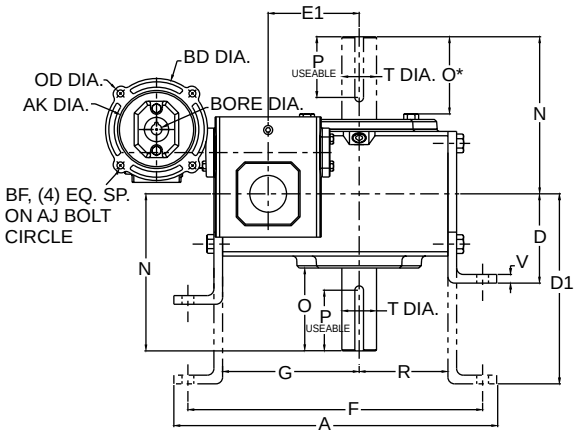


STYLE TV*(L or H)*M
(NEMA MOTORS ONLY)

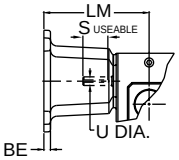


*Note: The input shaft may be rotated in either direction. Units are for mounting as shown. Contact factory for other mountings or assembly position options.*

# Triple Reduction

## Styles TV(*L or H*), TV(*L or H*)MQ & TV(*L or H*)M

| UNIT | A | B | BC | BH | D | D1 | E1 | E2 | E3 | F | FA | G | H | I | J | K | L | M | N | O | O* |
|---|---|---|---|---|---|---|---|---|---|---|---|---|---|---|---|---|---|---|---|---|---|
| 213 | 7.26 | 4.00 | 5.32 | 7.16 | 2.63 | 3.56 | 1.333 | 1.333 | 1.333 | 6.50 | N/A | 3.86 | .38 | 2.61 | 3.00 | 1.50 | 9.14 | 1.76 | 4.00 | 2.16 | 1.94 |
| 215 | 7.88 | 5.00 | 5.85 | 7.69 | 3.00 | 4.38 | 1.540 | 1.333 | 1.333 | 7.00 | N/A | 4.28 | .44 | 3.14 | 4.00 | 2.00 | 9.67 | 1.76 | 4.31 | 2.11 | 1.90 |
| 218 | 8.25 | 5.00 | 5.94 | 7.79 | 3.00 | 4.38 | 1.750 | 1.333 | 1.333 | 7.37 | N/A | 4.50 | .44 | 3.24 | 4.00 | 2.00 | 9.77 | 1.76 | 4.31 | 2.05 | 1.84 |
| 220 | 9.38 | 6.00 | 6.32 | 8.16 | 3.13 | 4.88 | 2.063 | 1.333 | 1.333 | 8.38 | N/A | 5.09 | .50 | 3.61 | 4.88 | 2.44 | 10.14 | 1.76 | 4.68 | 2.29 | 2.08 |
| 224 | 9.94 | 6.00 | 6.44 | 8.29 | 3.38 | 5.25 | 2.375 | 1.333 | 1.333 | 8.81 | N/A | 5.38 | .50 | 3.77 | 4.88 | 2.44 | 10.27 | 1.76 | 5.14 | 2.66 | 2.44 |
| 226 | 11.24 | 7.00 | 7.01 | 8.85 | 3.63 | 5.56 | 2.625 | 1.333 | 1.333 | 10.12 | N/A | 6.12 | .56 | 4.34 | 5.75 | 2.88 | 10.83 | 1.76 | 5.63 | 2.73 | 2.52 |
| 230 | 12.50 | 8.00 | 7.86 | 10.06 | 3.94 | 5.88 | 3.000 | 1.540 | 1.333 | 11.13 | N/A | 6.75 | .56 | 4.84 | 6.00 | 3.00 | 11.69 | 1.76 | 6.75 | 3.60 | 3.36 |
| 232 | 13.00 | 8.50 | 8.05 | 10.25 | 4.69 | 6.25 | 3.250 | 1.540 | 1.333 | 11.88 | N/A | 7.13 | .56 | 5.02 | 6.13 | 3.06 | 11.87 | 1.76 | 7.06 | 3.66 | 3.42 |
| 242 | 16.26 | 10.00 | 9.18 | 11.57 | 5.00 | 7.50 | 4.250 | 2.063 | 1.333 | 14.88 | N/A | 8.69 | .69 | 6.10 | 7.88 | 3.94 | 13.00 | 1.76 | 8.12 | 4.50 | 4.21 |
| 252 | 19.62 | 13.00 | 11.57 | 14.47 | 5.16 | 9.16 | 5.250 | 2.625 | 1.333 | 18.00 | N/A | 10.88 | .78 | 7.50 | 10.00 | 5.00 | 15.40 | 1.76 | 9.06 | 4.78 | 4.53 |
| 2600 | 23.26 | 14.75 | 13.30 | 16.70 | 7.31 | 9.63 | 6.000 | 3.250 | 1.540 | 20.88 | 10.24 | 12.19 | .91 | N/A | 11.76 | 5.88 | 17.65 | 1.76 | 10.00 | 4.66 | 4.66 |
| 2700 | 26.91 | 14.88 | 12.96 | 16.90 | 7.00 | N/A | 7.000 | 3.250 | 1.540 | 23.99 | 10.63 | 13.87 | 1.13 | N/A | 12.50 | 6.25 | 17.31 | 1.76 | 11.76 | 5.69 | 5.69 |
| 2800 | 28.96 | 17.00 | 13.94 | 18.19 | 8.00 | N/A | 8.000 | 4.250 | 2.063 | 25.50 | 11.93 | 14.38 | 1.13 | N/A | 14.00 | 7.00 | 18.77 | 1.76 | 12.25 | 6.02 | 6.02 |
| 21000 | 37.47 | 20.88 | 17.05 | 22.30 | 9.00 | N/A | 10.000 | 5.250 | 2.625 | 30.75 | 14.34 | 17.76 | 1.44 | N/A | 17.75 | 8.88 | 23.13 | 2.38 | 14.75 | 6.80 | 6.80 |

| UNIT | P** | R | S** | T Dia. | U Dia. | V | Y | Z |
|---|---|---|---|---|---|---|---|---|
| 213 | 3/16 x 1.50 | 1.72 | 1/8 x 1.44 | .625 | .500 | .25 | 1.72 | 4.66 |
| 215 | 3/16 x 1.50 | 1.91 | 1/8 x 1.44 | .750 | .500 | .25 | 1.72 | 4.66 |
| 218 | 3/16 x 1.38 | 2.06 | 1/8 x 1.44 | .875 | .500 | .25 | 1.72 | 4.66 |
| 220 | 1/4 x 1.44 | 2.28 | 1/8 x 1.44 | 1.000 | .500 | .38 | 1.72 | 4.66 |
| 224 | 1/4 x 1.75 | 2.50 | 1/8 x 1.44 | 1.125 | .500 | .38 | 1.72 | 4.66 |
| 226 | 1/4 x 2.00 | 2.94 | 1/8 x 1.44 | 1.250 | .500 | .38 | 1.72 | 4.66 |
| 230 | 1/4 X 2.25 | 3.25 | 1/8 x 1.44 | 1.250 | .500 | .38 | 1.72 | 4.66 |
| 232 | 3/8 X 2.62 | 3.50 | 1/8 x 1.44 | 1.500 | .500 | .38 | 1.72 | 4.66 |
| 242 | 1/2 X 3.06 | 4.44 | 1/8 x 1.44 | 1.875 | .500 | .50 | 1.72 | 4.66 |
| 252 | 1/2 x 3.50 | 5.12 | 1/8 x 1.44 | 2.000 | .500 | .50 | 1.72 | 4.66 |
| 2600 | 5/8 x 4.00 | 6.50 | 3/16 x 1.50 | 2.500 | .625 | .50 | 1.91 | 5.38 |
| 2700 | 5/8 x 4.00 | 7.59 | 3/16 x 1.50 | 2.750 | .625 | .75 | 1.91 | 5.38 |
| 2800 | 3/4 x 4.50 | 8.86 | 3/16 x 1.50 | 3.000 | .625 | .75 | 2.28 | 6.38 |
| 21000 | 7/8 x 5.00 | 10.36 | 3/16 x 1.75 | 3.750 | .750 | 1.00 | 2.94 | 8.00 |

**applies to double output shaft - all sizes, and single output shaft - sizes 242 & larger*
***keyway width by length*

*Note: All dimensions listed are for reference only. Contact factory for certified dimensions.*

WARNING *For safety, purchaser or user should provide protective guards over shaft extensions and any couplings, sheaves and belts, sprockets and chains, etc., mounted thereon.*

### IEC B5 & B3/B5 Metric Motor Flange Face Locations

| | D63D | | D71D | | D80D | | D90D | | D100LD D112MD | |
|---|---|---|---|---|---|---|---|---|---|---|
| UNIT | LQ | RQ | LQ | RQ | LQ | RQ | LQ | RQ | LQ | RQ |
| 213 | 2.62 | 2.45 | 2.65 | 2.47 | 2.89 | 2.71 | N/A | N/A | N/A | N/A |
| 215 | 2.62 | 2.45 | 2.65 | 2.47 | 2.89 | 2.71 | N/A | N/A | N/A | N/A |
| 218 | 2.62 | 2.45 | 2.65 | 2.47 | 2.89 | 2.71 | N/A | N/A | N/A | N/A |
| 220 | 2.62 | 2.45 | 2.65 | 2.47 | 2.89 | 2.71 | N/A | N/A | N/A | N/A |
| 224 | 2.62 | 2.45 | 2.65 | 2.47 | 2.89 | 2.71 | N/A | N/A | N/A | N/A |
| 226 | 2.62 | 2.45 | 2.65 | 2.47 | 2.89 | 2.71 | N/A | N/A | N/A | N/A |
| 230 | 2.62 | 2.45 | 2.65 | 2.47 | 2.89 | 2.71 | N/A | N/A | N/A | N/A |
| 232 | 2.62 | 2.45 | 2.65 | 2.47 | 2.89 | 2.71 | N/A | N/A | N/A | N/A |
| 242 | 2.62 | 2.45 | 2.65 | 2.47 | 2.89 | 2.71 | N/A | N/A | N/A | N/A |
| 252 | 2.62 | 2.45 | 2.65 | 2.47 | 2.89 | 2.71 | N/A | N/A | N/A | N/A |
| 2600 | 3.15 | 2.98 | 3.18 | 3.00 | 3.42 | 3.24 | N/A | N/A | N/A | N/A |
| 2700 | 3.15 | 2.98 | 3.18 | 3.00 | 3.42 | 3.24 | N/A | N/A | N/A | N/A |
| 2800 | 3.62 | 3.43 | 3.65 | 3.44 | 3.89 | 3.68 | N/A | N/A | N/A | N/A |
| 21000 | N/A | N/A | 4.28 | 4.09 | 4.90 | 4.72 | 4.90 | 4.72 | 5.30 | 5.07 |

## NEMA Motor Data

### NEMA Motor Mounting Dimensions

| Frame | AJ | AK | BD | OD | BE | BORE | KWY.** | BF |
|---|---|---|---|---|---|---|---|---|
| 48CZ | 3.75 | 3.00 | 3.88 | 4.36 | .38 | .500 | 1/8 x 1/16 | .28 |
| 56C | 5.88 | 4.50 | 5.88 | 6.64 | .38 | .625 | 3/16 x 3/32 | .41 |
| 140TC | 5.88 | 4.50 | 5.88 | 6.64 | .38 | .875 | 3/16 x 3/32 | .41 |
| 180TC | 7.25 | 8.50 | 9.00 | N/A | N/A | 1.125 | 1/4 x 1/8 | .53 |
| 210TC | 7.25 | 8.50 | 9.00 | N/A | N/A | 1.375 | 5/16 x 5/32 | .53 |

***keyway width by depth*

### NEMA Motor Flange Face Locations

| | 48CZ | | | 56C/140TC | | | 180TC | | | 210TC | | |
|---|---|---|---|---|---|---|---|---|---|---|---|---|
| UNIT | LM | RQ | LQ | LM | RQ | LQ | LM | RQ | LQ | LM | RQ | LQ |
| 213 | 5.63 | 3.09 | 3.46 | 6.07 | 3.09 | 3.46 | N/A | N/A | N/A | N/A | N/A | N/A |
| 215 | 5.63 | 3.09 | 3.46 | 6.07 | 3.09 | 3.46 | N/A | N/A | N/A | N/A | N/A | N/A |
| 218 | 5.63 | 3.09 | 3.46 | 6.07 | 3.09 | 3.46 | N/A | N/A | N/A | N/A | N/A | N/A |
| 220 | 5.63 | 3.09 | 3.46 | 6.07 | 3.09 | 3.46 | N/A | N/A | N/A | N/A | N/A | N/A |
| 224 | 5.63 | 3.09 | 3.46 | 6.07 | 3.09 | 3.46 | N/A | N/A | N/A | N/A | N/A | N/A |
| 226 | 5.63 | 3.09 | 3.46 | 6.07 | 3.09 | 3.46 | N/A | N/A | N/A | N/A | N/A | N/A |
| 230 | 5.63 | 3.09 | 3.46 | 6.07 | 3.09 | 3.46 | N/A | N/A | N/A | N/A | N/A | N/A |
| 232 | 5.63 | 3.09 | 3.46 | 6.07 | 3.09 | 3.46 | N/A | N/A | N/A | N/A | N/A | N/A |
| 242 | 5.63 | 3.09 | 3.46 | 6.07 | 3.09 | 3.46 | N/A | N/A | N/A | N/A | N/A | N/A |
| 252 | 5.63 | 3.09 | 3.46 | 6.07 | 3.09 | 3.46 | N/A | N/A | N/A | N/A | N/A | N/A |
| 2600 | 6.16 | 3.62 | 3.99 | 6.60 | 3.62 | 3.99 | N/A | N/A | N/A | N/A | N/A | N/A |
| 2700 | 6.16 | 3.62 | 3.99 | 6.60 | 3.62 | 3.99 | N/A | N/A | N/A | N/A | N/A | N/A |
| 2800 | 6.63 | 4.06 | 4.46 | 7.07 | 4.06 | 4.46 | N/A | N/A | N/A | N/A | N/A | N/A |
| 21000 | N/A | N/A | N/A | 8.32 | 4.82 | 5.19 | 9.32 | 5.13 | 5.62 | 9.32 | N/A | N/A |

## Metric Motor Data

### IEC B5 & B3/B5 Metric Motor Mounting Dimensions

*(All dimensions given in millimeters)*

| Frame | AJ | AK | BD | OD | BE | BORE | KWY.** | BF TAP |
|---|---|---|---|---|---|---|---|---|
| D63D | 115 | 95 | 117 | 131 | 10 | 11 | 4 x 2 | M8 x 1.25 |
| D71D | 130 | 110 | 132 | 146 | 11 | 14 | 5 x 2.5 | M8 x 1.25 |
| D80D | 165 | 130 | 165 | 184 | 15 | 19 | 6 x 3 | M10 x 1.50 |
| D90D | 165 | 130 | 165 | 184 | 15 | 24 | 8 x 3.5 | M10 x 1.50 |
| D100LD* | 215 | 180 | 216 | 237 | 18 | 28 | 8 x 3.5 | M12 x 1.75 |

**also applies to D112MD*
***keyway width by depth*

# Triple Reduction

## Worm / Worm / Worm Dimensions

### Style TF

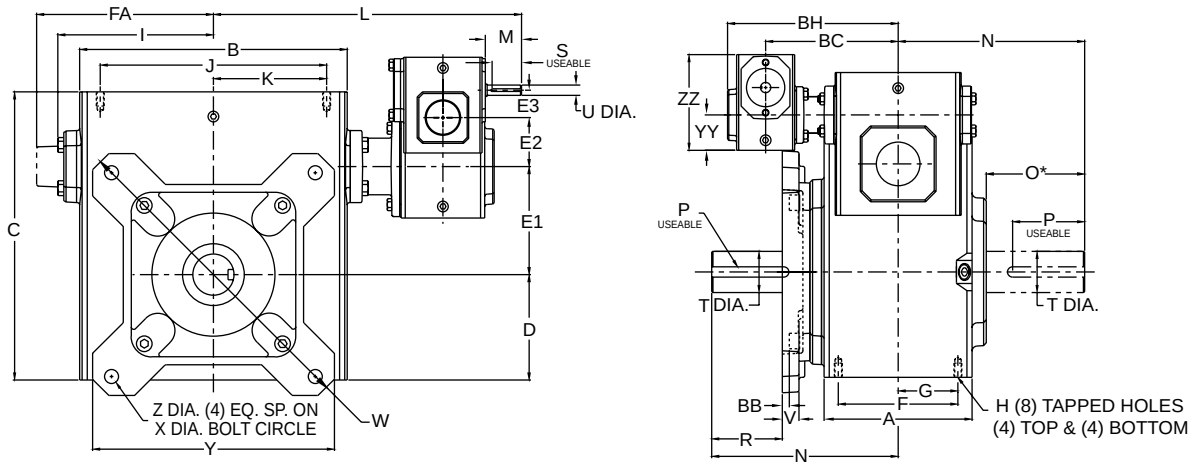


### Styles TFMQ & TFM

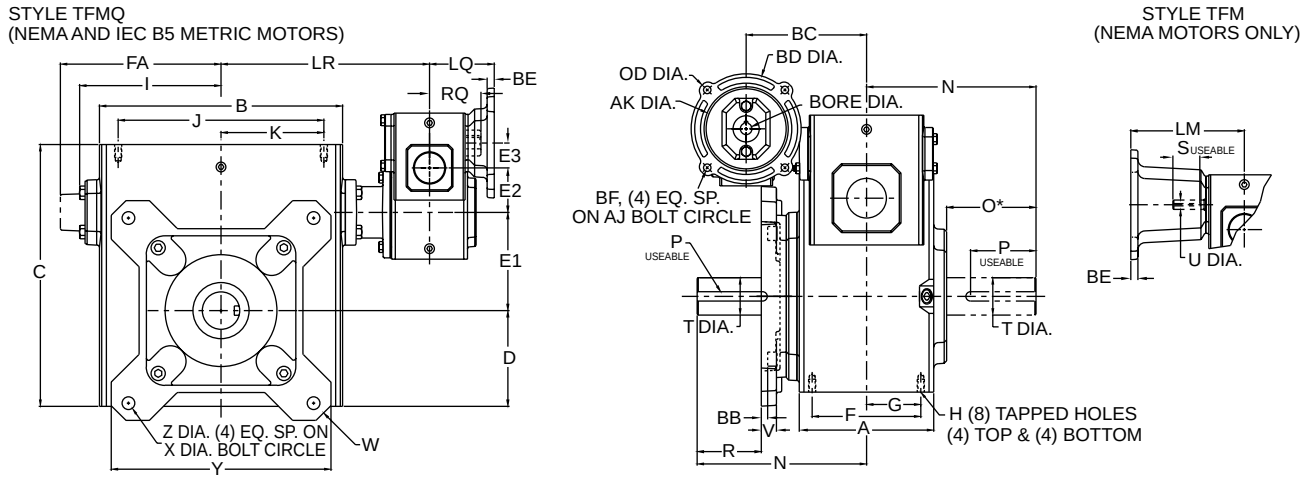


*Note: The input shaft may be rotated in either direction. Units are for mounting as shown. Contact factory for other mountings or assembly position options.*

# Triple Reduction

## Styles TF, TFMQ & TFM

| UNIT | A | B | BB | BC | BH | C | D | E1 | E2 | E3 | F | FA | G | H | H Depth | I | J | K | L | LR | M | N | O* |
|---|---|---|---|---|---|---|---|---|---|---|---|---|---|---|---|---|---|---|---|---|---|---|---|
| 213 | 2.82 | 3.80 | .08 | 5.32 | 7.16 | 4.66 | 1.72 | 1.333 | 1.333 | 1.333 | 2.00 | N/A | 1.00 | 5/16-18 | .50 | 2.61 | 3.25 | 1.63 | 9.14 | 5.32 | 1.76 | 4.00 | 2.16 |
| 215 | 3.44 | 4.88 | .08 | 5.32 | 7.16 | 5.38 | 1.91 | 1.540 | 1.333 | 1.333 | 2.75 | N/A | 1.38 | 5/16-18 | .63 | 3.14 | 4.19 | 2.09 | 9.67 | 5.85 | 1.76 | 4.31 | 2.11 |
| 218 | 3.56 | 5.06 | .11 | 5.32 | 7.16 | 5.75 | 2.06 | 1.750 | 1.333 | 1.333 | 2.75 | N/A | 1.38 | 5/16-18 | .63 | 3.24 | 4.19 | 2.09 | 9.77 | 5.94 | 1.76 | 4.31 | 2.05 |
| 220 | 3.81 | 5.80 | .55 | 5.32 | 7.16 | 6.38 | 2.28 | 2.063 | 1.333 | 1.333 | 3.00 | N/A | 1.50 | 5/16-18 | .63 | 3.61 | 4.75 | 2.38 | 10.14 | 6.32 | 1.76 | 4.68 | 2.29 |
| 224 | 4.06 | 6.12 | .51 | 5.32 | 7.16 | 6.94 | 2.50 | 2.375 | 1.333 | 1.333 | 2.88 | N/A | 1.44 | 3/8-16 | .69 | 3.77 | 5.00 | 2.50 | 10.27 | 6.44 | 1.76 | 5.14 | 2.66 |
| 226 | 4.84 | 7.12 | .04 | 5.32 | 7.16 | 8.00 | 2.94 | 2.625 | 1.333 | 1.333 | 3.38 | N/A | 1.69 | 3/8-16 | .69 | 4.34 | 6.38 | 3.19 | 10.83 | 7.01 | 1.76 | 5.63 | 2.73 |
| 230 | 5.25 | 8.12 | .07 | 5.85 | 7.69 | 8.88 | 3.25 | 3.000 | 1.540 | 1.333 | 4.00 | N/A | 2.00 | 7/16-14 | .88 | 4.84 | 7.00 | 3.50 | 11.69 | 7.86 | 1.76 | 6.75 | 3.60 |
| 232 | 5.75 | 8.50 | .07 | 5.85 | 7.69 | 9.38 | 3.50 | 3.250 | 1.540 | 1.333 | 4.00 | N/A | 2.00 | 7/16-14 | .88 | 5.02 | 7.50 | 3.75 | 11.87 | 8.05 | 1.76 | 7.06 | 3.66 |
| 242 | 6.13 | 10.25 | .06 | 6.32 | 8.16 | 11.38 | 4.44 | 4.250 | 2.063 | 1.333 | 5.00 | N/A | 2.50 | 5/8-11 | 1.00 | 6.10 | 8.50 | 4.25 | 13.00 | 9.18 | 1.76 | 8.12 | 4.50 |
| 252 | 7.19 | 13.00 | .34 | 7.01 | 8.85 | 14.00 | 5.12 | 5.250 | 2.625 | 1.333 | 5.81 | N/A | 2.91 | 5/8-11 | 1.25 | 7.50 | 11.00 | 5.50 | 15.40 | 11.57 | 1.76 | 9.06 | 4.78 |
| 2600 | 8.13 | 14.25 | 1.38 | 8.05 | 10.25 | 16.50 | 6.50 | 6.000 | 3.250 | 1.540 | 6.38 | 10.24 | 3.19 | 5/8-11 | 1.00 | N/A | 12.75 | 6.38 | 17.65 | 13.30 | 1.76 | 10.00 | 4.65 |
| 2700 | 7.63 | 14.88 | 1.57 | 8.05 | 10.25 | 18.91 | 7.59 | 7.000 | 3.250 | 1.540 | 5.50 | 10.63 | 2.75 | 1-8 | 1.56 | N/A | 12.50 | 6.25 | 17.31 | 12.96 | 1.76 | 11.76 | 5.65 |
| 2800 | 8.63 | 17.00 | 1.89 | 9.18 | 11.57 | 20.96 | 8.86 | 8.000 | 4.250 | 2.063 | 6.50 | 11.93 | 3.25 | 1-8 | 1.66 | N/A | 14.25 | 7.13 | 18.77 | 13.94 | 1.76 | 12.25 | 5.98 |
| 21000 | 9.53 | 20.88 | 1.85 | 11.57 | 14.47 | 25.47 | 10.36 | 10.000 | 5.250 | 2.625 | 6.88 | 14.34 | 3.44 | 1 1/4-7 | 2.04 | N/A | 17.75 | 8.88 | 23.13 | 17.05 | 2.38 | 14.75 | 6.76 |

| UNIT | P** | R | S** | T Dia. | U Dia. | V | W | X Dia. | Y | YY | Z Dia. | ZZ |
|---|---|---|---|---|---|---|---|---|---|---|---|---|
| 213 | 3/16 x 1.50 | 1.48 | 1/8 x 1.44 | .625 | .500 | .38 | 5.92 | 5.00 | 4.50 | 1.72 | .34 | 4.66 |
| 215 | 3/16 x 1.50 | 1.44 | 1/8 x 1.44 | .750 | .500 | .38 | 5.92 | 5.00 | 4.50 | 1.72 | .34 | 4.66 |
| 218 | 3/16 x 1.38 | 1.13 | 1/8 x 1.44 | .875 | .500 | .38 | 6.64 | 5.88 | 5.00 | 1.72 | .34 | 4.66 |
| 220 | 1/4 x 1.44 | .99 | 1/8 x 1.44 | 1.000 | .500 | .44 | 7.88 | 7.00 | 5.99 | 1.72 | .41 | 4.66 |
| 224 | 1/4 x 1.75 | 1.47 | 1/8 x 1.44 | 1.125 | .500 | .44 | 8.39 | 7.50 | 6.27 | 1.72 | .41 | 4.66 |
| 226 | 1/4 x 2.00 | 1.99 | 1/8 x 1.44 | 1.250 | .500 | .50 | 8.88 | 8.00 | 6.67 | 1.72 | .41 | 4.66 |
| 230 | 1/4 X 2.25 | 3.03 | 1/8 x 1.44 | 1.250 | .500 | .50 | 9.89 | 9.00 | 7.37 | 1.91 | .41 | 5.38 |
| 232 | 3/8 X 2.62 | 3.08 | 1/8 x 1.44 | 1.500 | .500 | .50 | 9.89 | 9.00 | 7.37 | 1.91 | .41 | 5.38 |
| 242 | 1/2 X 3.06 | 3.62 | 1/8 x 1.44 | 1.875 | .500 | .62 | 12.95 | 11.50 | 9.65 | 2.28 | .56 | 6.38 |
| 252 | 1/2 x 3.50 | 3.50 | 1/8 x 1.44 | 2.000 | .500 | .75 | 15.50 | 14.00 | 11.75 | 2.94 | .69 | 8.00 |
| 2600 | 5/8 x 4.00 | 2.78 | 3/16 x 1.50 | 2.500 | .625 | .75 | 18.00 | 15.63 | 14.00 | 3.50 | .69 | 9.38 |
| 2700 | 5/8 x 4.00 | 4.32 | 3/16 x 1.50 | 2.750 | .625 | .75 | 21.00 | 18.38 | 15.63 | 3.50 | .78 | 9.38 |
| 2800 | 3/4 x 4.50 | 3.92 | 3/16 x 1.50 | 3.000 | .625 | .75 | 24.00 | 21.00 | 17.88 | 4.44 | 1.03 | 11.38 |
| 21000 | 7/8 x 5.00 | 5.70 | 3/16 x 1.75 | 3.750 | .750 | .75 | 29.00 | 25.00 | 21.19 | 5.12 | 1.03 | 14.00 |

**applies to double output shaft*
***keyway width by length*

*Note: All dimensions listed are for reference only. Contact factory for certified dimensions.*

WARNING *For safety, purchaser or user should provide protective guards over shaft extensions and any couplings, sheaves and belts, sprockets and chains, etc., mounted thereon.*

## NEMA Motor Data

### NEMA Motor Mounting Dimensions

| Frame | AJ | AK | BD | OD | BE | BORE | KWY.** | BF |
|---|---|---|---|---|---|---|---|---|
| 48CZ | 3.75 | 3.00 | 3.88 | 4.36 | .38 | .500 | 1/8 x 1/16 | .28 |
| 56C | 5.88 | 4.50 | 5.88 | 6.64 | .38 | .625 | 3/16 x 3/32 | .41 |
| 140TC | 5.88 | 4.50 | 5.88 | 6.64 | .38 | .875 | 3/16 x 3/32 | .41 |
| 180TC | 7.25 | 8.50 | 9.00 | N/A | N/A | 1.125 | 1/4 x 1/8 | .53 |
| 210TC | 7.25 | 8.50 | 9.00 | N/A | N/A | 1.375 | 5/16 x 5/32 | .53 |

***keyway width by depth*

### NEMA Motor Flange Face Locations

| | 48CZ | | | 56C/140TC | | | 180TC | | | 210TC | | |
|---|---|---|---|---|---|---|---|---|---|---|---|---|
| UNIT | LM | RQ | LQ | LM | RQ | LQ | LM | RQ | LQ | LM | RQ | LQ |
| 213 | 5.63 | 3.09 | 3.46 | 6.07 | 3.09 | 3.46 | N/A | N/A | N/A | N/A | N/A | N/A |
| 215 | 5.63 | 3.09 | 3.46 | 6.07 | 3.09 | 3.46 | N/A | N/A | N/A | N/A | N/A | N/A |
| 218 | 5.63 | 3.09 | 3.46 | 6.07 | 3.09 | 3.46 | N/A | N/A | N/A | N/A | N/A | N/A |
| 220 | 5.63 | 3.09 | 3.46 | 6.07 | 3.09 | 3.46 | N/A | N/A | N/A | N/A | N/A | N/A |
| 224 | 5.63 | 3.09 | 3.46 | 6.07 | 3.09 | 3.46 | N/A | N/A | N/A | N/A | N/A | N/A |
| 226 | 5.63 | 3.09 | 3.46 | 6.07 | 3.09 | 3.46 | N/A | N/A | N/A | N/A | N/A | N/A |
| 230 | 5.63 | 3.09 | 3.46 | 6.07 | 3.09 | 3.46 | N/A | N/A | N/A | N/A | N/A | N/A |
| 232 | 5.63 | 3.09 | 3.46 | 6.07 | 3.09 | 3.46 | N/A | N/A | N/A | N/A | N/A | N/A |
| 242 | 5.63 | 3.09 | 3.46 | 6.07 | 3.09 | 3.46 | N/A | N/A | N/A | N/A | N/A | N/A |
| 252 | 5.63 | 3.09 | 3.46 | 6.07 | 3.09 | 3.46 | N/A | N/A | N/A | N/A | N/A | N/A |
| 2600 | 6.16 | 3.62 | 3.99 | 6.60 | 3.62 | 3.99 | N/A | N/A | N/A | N/A | N/A | N/A |
| 2700 | 6.16 | 3.62 | 3.99 | 6.60 | 3.62 | 3.99 | N/A | N/A | N/A | N/A | N/A | N/A |
| 2800 | 6.63 | 4.06 | 4.46 | 7.07 | 4.06 | 4.46 | N/A | N/A | N/A | N/A | N/A | N/A |
| 21000 | N/A | N/A | N/A | 8.32 | 4.82 | 5.19 | 9.32 | 5.13 | 5.62 | 9.32 | N/A | N/A |

### IEC B5 & B3/B5 Metric Motor Flange Face Locations

| | D63D | | D71D | | D80D | | D90D | | D100LD D112MD | |
|---|---|---|---|---|---|---|---|---|---|---|
| UNIT | LQ | RQ | LQ | RQ | LQ | RQ | LQ | RQ | LQ | RQ |
| 213 | 2.62 | 2.45 | 2.65 | 2.47 | 2.89 | 2.71 | N/A | N/A | N/A | N/A |
| 215 | 2.62 | 2.45 | 2.65 | 2.47 | 2.89 | 2.71 | N/A | N/A | N/A | N/A |
| 218 | 2.62 | 2.45 | 2.65 | 2.47 | 2.89 | 2.71 | N/A | N/A | N/A | N/A |
| 220 | 2.62 | 2.45 | 2.65 | 2.47 | 2.89 | 2.71 | N/A | N/A | N/A | N/A |
| 224 | 2.62 | 2.45 | 2.65 | 2.47 | 2.89 | 2.71 | N/A | N/A | N/A | N/A |
| 226 | 2.62 | 2.45 | 2.65 | 2.47 | 2.89 | 2.71 | N/A | N/A | N/A | N/A |
| 230 | 2.62 | 2.45 | 2.65 | 2.47 | 2.89 | 2.71 | N/A | N/A | N/A | N/A |
| 232 | 2.62 | 2.45 | 2.65 | 2.47 | 2.89 | 2.71 | N/A | N/A | N/A | N/A |
| 242 | 2.62 | 2.45 | 2.65 | 2.47 | 2.89 | 2.71 | N/A | N/A | N/A | N/A |
| 252 | 2.62 | 2.45 | 2.65 | 2.47 | 2.89 | 2.71 | N/A | N/A | N/A | N/A |
| 2600 | 3.15 | 2.98 | 3.18 | 3.00 | 3.42 | 3.24 | N/A | N/A | N/A | N/A |
| 2700 | 3.15 | 2.98 | 3.18 | 3.00 | 3.42 | 3.24 | N/A | N/A | N/A | N/A |
| 2800 | 3.62 | 3.43 | 3.65 | 3.44 | 3.89 | 3.68 | N/A | N/A | N/A | N/A |
| 21000 | N/A | N/A | 4.28 | 4.09 | 4.90 | 4.72 | 4.90 | 4.72 | 5.30 | 5.07 |

## Metric Motor Data

### IEC B5 & B3/B5 Metric Motor Mounting Dimensions

*(All dimensions given in millimeters)*

| Frame | AJ | AK | BD | OD | BE | BORE | KWY.** | BF TAP |
|---|---|---|---|---|---|---|---|---|
| D63D | 115 | 95 | 117 | 131 | 10 | 11 | 4 x 2 | M8 x 1.25 |
| D71D | 130 | 110 | 132 | 146 | 11 | 14 | 5 x 2.5 | M8 x 1.25 |
| D80D | 165 | 130 | 165 | 184 | 15 | 19 | 6 x 3 | M10 x 1.50 |
| D90D | 165 | 130 | 165 | 184 | 15 | 24 | 8 x 3.5 | M10 x 1.50 |
| D100LD* | 215 | 180 | 216 | 237 | 18 | 28 | 8 x 3.5 | M12 x 1.75 |

**also applies to D112MD*
***keyway width by depth*

## Triple Reduction
## Worm/Worm/Worm Assembly Index


| Standard Assemblies | Page |
|---|---|
| Style TT, TTM, TTMQ | As shown in dimension sheet on *page 124* |
| Style TU, TUM, TUMQ | As shown in dimension sheet on *page 126* |
| Style TV*(L or H)*, TV*(L or H)*M, TV*(L or H)*MQ | As shown in dimension sheet on *page 128* |
| Style TF, TFM, TFMQ | As shown in dimension sheet on *page 130* |

*All other assemblies and styles contact factory.*

# Motorized Reducers
# AC Motors & Grove Gear Reducers

New rating tables that make your gearmotor selection and ordering easy.

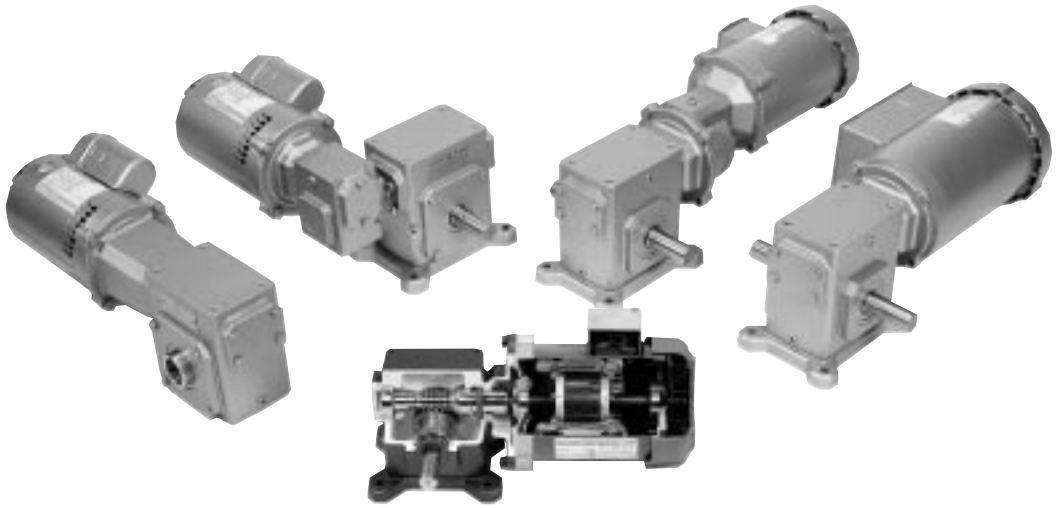

Page

**Cutaway** . . . . . 134

**Selection Guide** . . . . . 135

**Rating Tables**
- Single Phase - Totally Enclosed
  - -Style BMQ . . . . . 136 - 137
  - -Style TMQ . . . . . 138 - 139
- Single Phase - BISSC Washdown Duty
  - -Style BMQ . . . . . 140
  - -Style TMQ . . . . . 141
- Three Phase - Totally Enclosed
  - -Style BMQ . . . . . 142 - 143
  - -Style TMQ . . . . . 144 - 145
- Three Phase - BISSC Washdown Duty
  - -Style BMQ . . . . . 146 - 147
  - -Style TMQ . . . . . 148 - 149
- Three Phase - Inverter Duty
  - -Style BMQ . . . . . 150 - 151
  - -Style TMQ . . . . . 152 - 153

**Dimensions** . . . . . 154

# Motorized Reducers

## Motorized Reducer Product Features

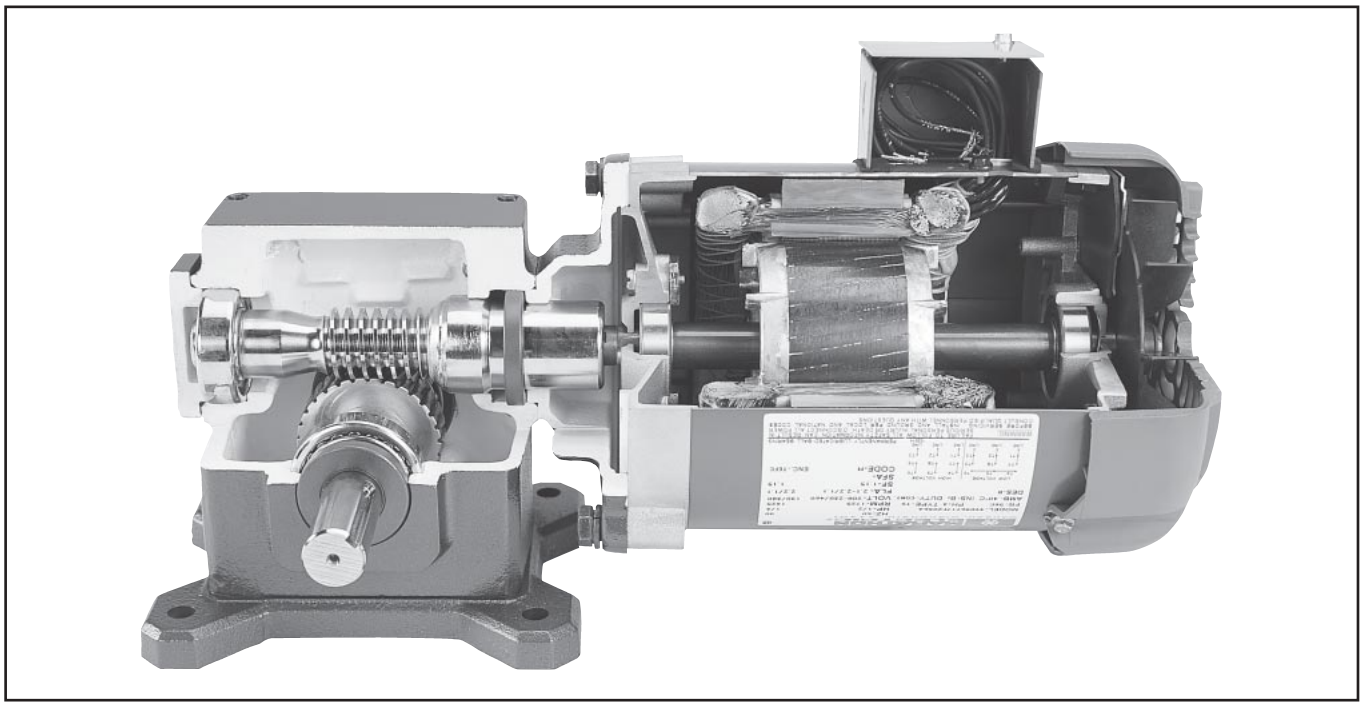

- **AC Motors are "C" face mounted** to quill style reducers to provide a clean, compact design.
- **Motor frames are made of heavy gauge steel** to provide quiet, trouble free operation.
- **Windings are 100% copper** for efficient, cool running characteristics.
- **Rugged iron housings**, covers, and flanges provide superior strength and rigidity.
- **Single cover output design** ensures gear centering for maximum efficiency and minimum noise levels.*
- The **worm shaft** is cut integral with the input shaft then hardened, ground, and polished to provide maximum efficiency with minimum gear noise.
- The **bronze worm gear** is chill cast from the highest quality bronze to provide superior wear and lubricity characteristics for longer life and and higher efficiency.
- **Premium tapered roller bearings** on output shafts provide greater life, overhung load and thrust capacity.
- **Oversized steel output shafts** provide superior over hung load and torque characteristics.
- **Premium Chicago Rawhide Viton® double lip seals** provide extended life because of increased resistance to high temperature, abrasion and chemicals.*
- **O rings on input and output covers** provide positive sealing without undependable gaskets or messy silicone sealants.*
- **Non-compressible metal shims** maintain factory bearing settings and gear alignment throughout the life of the product.*
- The unique **quill seal guard** protects the input seal from damage during motor installation.*
- **Large oil capacity** provides positive splash lubrication and superior cooling capability.
- **Metal nameplate drive screwed to housing** insures easy field identification for repair parts and replacement.
- **Units are oil filled at the factory** with the proper lubrication to provide simple and economical installation.
- **All units are 100% run and leak tested** at the factory to insure that you receive the highest quality product.

**Standard on unit sizes up to and including 5 1/4 inch center distance only. (Size 213 to 252)*

# Motorized Reducers

## Selection Guide

### Style BM

*Ratings - Pg. **
*Dimensions - Pg. **

### Style BMQ

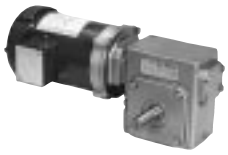

*Ratings - Pg. 136-153*
*Dimensions - Pg. **

### Style TM

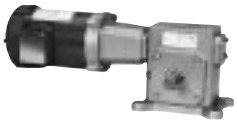

*Ratings - Pg. **
*Dimensions - Pg. **

### Style TMQ

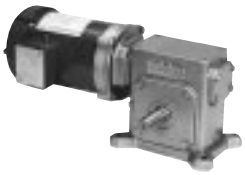

*Ratings - Pg. 136-153*
*Dimensions - Pg. **

### Style VLMQ

*Ratings - Pg. **
*Dimensions - Pg. **

### Style VHM

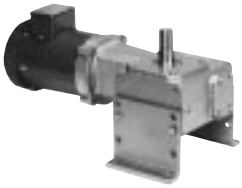

*Ratings - Pg. **
*Dimensions - Pg. **

### Style VHMQ

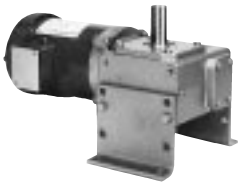

*Ratings - Pg. **
*Dimensions - Pg. **

### Style JM

*Ratings - Pg. **
*Dimensions - Pg. **

### Style JMQ

*Ratings - Pg. **
*Dimensions - Pg. **

### Style FM

*Ratings - Pg. **
*Dimensions - Pg. **

### Style FMQ

*Ratings - Pg. **
*Dimensions - Pg. **

### Style HM

*Ratings - Pg. **
*Dimensions - Pg. **

### Style HMQ

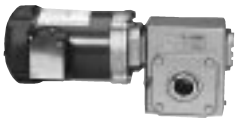

*Ratings - Pg. **
*Dimensions - Pg. **

### Style CM

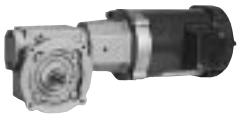

*Ratings - Pg. **
*Dimensions - Pg. **

### Style CMQ

*Ratings - Pg. **
*Dimensions - Pg. **

### Style DXTMQ

*Ratings - Pg. **
*Dimensions - Pg. **

### Style DTM

*Ratings - Pg. **
*Dimensions - Pg. **

### Style DTMQ

*Ratings - Pg. **
*Dimensions - Pg. **

*Contact factory for ratings and/or dimension information.

# Style BMQ

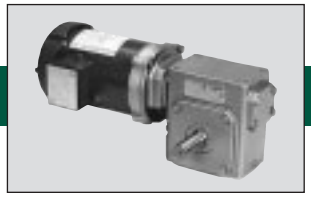

## AC Gearmotor

### Single Phase • Totally Enclosed
### 115/208-230 VAC - 60 HZ
### 1750 RPM Input Speed

| Output RPM | Motor HP | Model Number Motor + Reducer | Output TQ (IN. LBS.) | OHL (LBS.) | Service Factor | F.L. AMPS 115V/230V | Apprx. Weight Motor + Reducer | AG Dim. |
|---|---|---|---|---|---|---|---|---|
| | 1/4 | G511 + BMQ213 | 41 | 700 | 4.23 | 4.2 / 2.1 | 16 lb. + 17 lb. | 7.88 |
| 350 | 1/2 | G515 + BMQ213 | 81 | 700 | 2.12 | 8.0 / 4.0 | 23 lb. + 17 lb. | 9.13 |
| | 3/4 | G517 + BMQ213 | 122 | 700 | 1.41 | 11.0 / 5.5 | 30 lb. + 17 lb. | 10.26 |
| 5:1 | 1 | G519 + BMQ213 | 163 | 700 | 1.06 | 13.4 / 6.7 | 31 lb. + 17 lb. | 10.76 |
| Ratio | 1-1/2 | G531 + BMQ215 | 248 | 860 | 1.03 | 15.2 / 7.6 | 40 lb. + 22 lb. | 11.76 |
| | 2 | # G575 + BMQ220 | 333 | 1000 | 1.26 | 20.0 / 10.0 | 51 lb. + 30 lb. | 12.76 |
| | 1/4 | G511 + BMQ213 | 56 | 700 | 3.48 | 4.2 / 2.1 | 16 lb. + 17 lb. | 7.88 |
| 233 | 1/2 | G515 + BMQ213 | 112 | 700 | 1.74 | 8.0 / 4.0 | 23 lb. + 17 lb. | 9.13 |
| | 3/4 | G517 + BMQ213 | 168 | 700 | 1.16 | 11.0 / 5.5 | 30 lb. + 17 lb. | 10.26 |
| 7-1/2:1 | 1 | G519 + BMQ215 | 238 | 860 | 1.24 | 13.4 / 6.7 | 31 lb. + 22 lb. | 10.76 |
| Ratio | 1-1/2 | G531 + BMQ218 | 363 | 790 | 1.11 | 15.2 / 7.6 | 40 lb. + 24 lb. | 11.76 |
| | 2 | # G575 + BMQ220 | 489 | 1035 | 1.19 | 20.0 / 10.0 | 51 lb. + 30 lb. | 12.76 |
| | 1/4 | G511 + BMQ213 | 78 | 700 | 2.93 | 4.2 / 2.1 | 16 lb. + 17 lb. | 7.88 |
| 175 | 1/2 | G515 + BMQ213 | 156 | 700 | 1.47 | 8.0 / 4.0 | 23 lb. + 17 lb. | 9.13 |
| | 3/4 | G517 + BMQ215 | 230 | 860 | 1.36 | 11.0 / 5.5 | 30 lb. + 22 lb. | 10.26 |
| 10:1 | 1 | G519 + BMQ215 | 307 | 860 | 1.02 | 13.4 / 6.7 | 31 lb. + 22 lb. | 10.76 |
| Ratio | 1-1/2 | G531 + BMQ220 | 490 | 1065 | 1.39 | 15.2 / 7.6 | 40 lb. + 30 lb. | 11.76 |
| | 2 | # G575 + BMQ220 | 653 | 1065 | 1.05 | 20.0 / 10.0 | 51 lb. + 30 lb. | 12.76 |
| | 1/4 | G511 + BMQ213 | 111 | 700 | 2.20 | 4.2 / 2.1 | 16 lb. + 17 lb. | 7.88 |
| 117 | 1/2 | G515 + BMQ213 | 222 | 700 | 1.10 | 8.0 / 4.0 | 23 lb. + 17 lb. | 9.13 |
| | 3/4 | G517 + BMQ215 | 324 | 860 | 1.03 | 11.0 / 5.5 | 30 lb. + 22 lb. | 10.26 |
| 15:1 | 1 | G519 + BMQ218 | 461 | 790 | 1.03 | 13.4 / 6.7 | 31 lb. + 24 lb. | 10.76 |
| Ratio | 1-1/2 | G531 + BMQ220 | 709 | 1125 | 1.04 | 15.2 / 7.6 | 40 lb. + 30 lb. | 11.76 |
| | 2 | # G575 + BMQ224 | 951 | 1770 | 1.15 | 20.0 / 10.0 | 51 lb. + 46 lb. | 12.76 |
| | 1/4 | G511 + BMQ213 | 142 | 700 | 1.75 | 4.2 / 2.1 | 16 lb. + 17 lb. | 7.88 |
| 88 | 1/2 | G515 + BMQ215 | 273 | 860 | 1.28 | 8.0 / 4.0 | 23 lb. + 22 lb. | 9.13 |
| | 3/4 | G517 + BMQ218 | 443 | 860 | 1.09 | 11.0 / 5.5 | 30 lb. + 24 lb. | 10.26 |
| 20:1 | 1 | G519 + BMQ220 | 608 | 1175 | 1.24 | 13.4 / 6.7 | 31 lb. + 30 lb. | 10.76 |
| Ratio | 1-1/2 | G531 + BMQ224 | 920 | 1770 | 1.22 | 15.2 / 7.6 | 40 lb. + 46 lb. | 11.76 |
| | 2 | # G675 + BMQ226 | 1246 | 1625 | 1.19 | 20.0 / 10.0 | 51 lb. + 59 lb. | 12.76 |

# = Marathon Motor with Removable Base (Four-In-One)

Output torque is measured in inch-pounds. Overhung load is measured in pounds.

See page 154 for “AG” dimension on drawing.

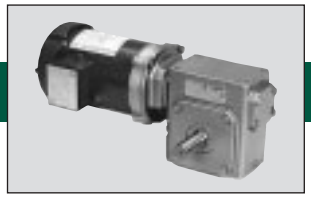

# Style BMQ

## AC Gearmotor

### Single Phase • Totally Enclosed
### 115/208-230 VAC - 60 HZ
### 1750 RPM Input Speed

| Output RPM | Motor HP | Model Number Motor + Reducer | Output TQ (IN. LBS.) | OHL (LBS.) | Service Factor | F.L. AMPS 115V/230V | Apprx. Weight Motor + Reducer | AG Dim. |
|---|---|---|---|---|---|---|---|---|
| 70 | 1/4 | G511 + BMQ213 | 167 | 700 | 1.50 | 4.2 / 2.1 | 16 lb. + 17 lb. | 7.88 |
| | 1/2 | G515 + BMQ215 | 324 | 860 | 1.09 | 8.0 / 4.0 | 23 lb. + 22 lb. | 9.13 |
| 25:1 Ratio | 3/4 | G517 + BMQ220 | 557 | 1210 | 1.34 | 11.0 / 5.5 | 30 lb. + 30 lb. | 10.26 |
| | 1 | G519 + BMQ220 | 743 | 1210 | 1.01 | 13.4 / 6.7 | 31 lb. + 30 lb. | 10.76 |
| | 1-1/2 | G531 + BMQ224 | 1117 | 1770 | 1.01 | 15.2 / 7.6 | 40 lb. + 46 lb. | 11.76 |
| | 2 | # G575 + BMQ230 | 1517 | 2170 | 1.38 | 20.0 / 10.0 | 51 lb. + 80 lb. | 12.76 |
| 58 | 1/4 | G511 + BMQ213 | 191 | 700 | 1.31 | 4.2 / 2.1 | 16 lb. + 17 lb. | 7.88 |
| | 1/2 | G515 + BMQ218 | 408 | 790 | 1.19 | 8.0 / 4.0 | 23 lb. + 24 lb. | 9.13 |
| 30:1 Ratio | 3/4 | G517 + BMQ220 | 638 | 1255 | 1.19 | 11.0 / 5.5 | 30 lb. + 30 lb. | 10.26 |
| | 1 | G519 + BMQ224 | 859 | 1770 | 1.32 | 13.4 / 6.7 | 31 lb. + 30 lb. | 10.76 |
| | 1-1/2 | G531 + BMQ226 | 1335 | 1625 | 1.10 | 15.2 / 7.6 | 40 lb. + 59 lb. | 11.76 |
| | 2 | # G575 + BMQ230 | 1765 | 2170 | 1.19 | 20.0 / 10.0 | 51 lb. + 80 lb. | 12.76 |
| 44 | 1/4 | G511 + BMQ213 | 237 | 700 | 1.04 | 4.2 / 2.1 | 16 lb. + 17 lb. | 7.88 |
| | 1/2 | G515 + BMQ220 | 523 | 1315 | 1.42 | 8.0 / 4.0 | 23 lb. + 30 lb. | 9.13 |
| 40:1 Ratio | 3/4 | G517 + BMQ224 | 808 | 1770 | 1.39 | 11.0 / 5.5 | 30 lb. + 30 lb. | 10.26 |
| | 1 | G519 + BMQ224 | 1078 | 1770 | 1.04 | 13.4 / 6.7 | 31 lb. + 30 lb. | 10.76 |
| | 1-1/2 | G531 + BMQ230 | 1663 | 2170 | 1.21 | 15.2 / 7.6 | 40 lb. + 80 lb. | 11.76 |
| | 2 | # G575 + BMQ232 | 2250 | 2275 | 1.17 | 20.0 / 10.0 | 51 lb. + 83 lb. | 12.76 |
| 35 | 1/4 | G511 + BMQ215 | 256 | 860 | 1.32 | 4.2 / 2.1 | 16 lb. + 22 lb. | 7.88 |
| | 1/2 | G515 + BMQ220 | 638 | 1385 | 1.13 | 8.0 / 4.0 | 23 lb. + 30 lb. | 9.13 |
| 50:1 Ratio | 3/4 | G517 + BMQ224 | 960 | 1770 | 1.13 | 11.0 / 5.5 | 30 lb. + 30 lb. | 10.26 |
| | 1 | G519 + BMQ226 | 1325 | 1625 | 1.08 | 13.4 / 6.7 | 31 lb. + 59 lb. | 10.76 |
| | 1-1/2 | G531 + BMQ230 | 1980 | 2170 | 1.02 | 15.2 / 7.6 | 40 lb. + 80 lb. | 11.76 |
| 29 | 1/4 | G511 + BMQ215 | 285 | 860 | 1.13 | 4.2 / 2.1 | 16 lb. + 22 lb. | 7.88 |
| | 1/2 | G515 + BMQ224 | 747 | 1770 | 1.35 | 8.0 / 4.0 | 23 lb. + 30 lb. | 9.13 |
| 60:1 Ratio | 3/4 | G517 + BMQ226 | 1143 | 1625 | 1.18 | 11.0 / 5.5 | 30 lb. + 59 lb. | 10.26 |
| | 1 | G519 + BMQ230 | 1505 | 2170 | 1.28 | 13.4 / 6.7 | 31 lb. + 80 lb. | 10.76 |
| | 1-1/2 | G531 + BMQ232 | 2324 | 2275 | 1.05 | 15.2 / 7.6 | 40 lb. + 83 lb. | 11.76 |
| 22 | 1/4 | G511 + BMQ220 | 450 | 1495 | 1.22 | 4.2 / 2.1 | 16 lb. + 30 lb. | 7.88 |
| | 1/2 | G515 + BMQ226 | 946 | 1625 | 1.15 | 8.0 / 4.0 | 23 lb. + 59 lb. | 9.13 |
| 80:1 Ratio | 3/4 | G517 + BMQ230 | 1412 | 2170 | 1.19 | 11.0 / 5.5 | 30 lb. + 80 lb. | 10.26 |
| | 1 | G519 + BMQ232 | 1943 | 2275 | 1.03 | 13.4 / 6.7 | 31 lb. + 83 lb. | 10.76 |
| 18 | 1/4 | G511 + BMQ224 | 528 | 1770 | 1.23 | 4.2 / 2.1 | 16 lb. + 30 lb. | 7.88 |
| 100:1 Ratio | 1/2 | G515 + BMQ230 | 1096 | 2170 | 1.21 | 8.0 / 4.0 | 23 lb. + 80 lb. | 9.13 |

# = Marathon Motor with Removable Base (Four-In-One)

Output torque is measured in inch-pounds. Overhung load is measured in pounds.

See page 154 for “AG” dimension on drawing.

# Style TMQ

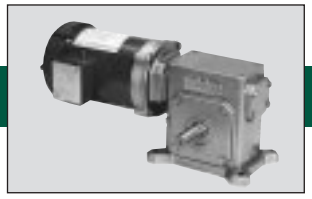

## AC Gearmotor

### Single Phase • Totally Enclosed
### 115/208-230 VAC - 60 HZ
### 1750 RPM Input Speed

| Output RPM | Motor HP | Model Number Motor + Reducer | Output TQ (IN. LBS.) | OHL (LBS.) | Service Factor | F.L. AMPS 115V/230V | Apprx. Weight Motor + Reducer | AG Dim. |
|---|---|---|---|---|---|---|---|---|
| | 1/4 | G511 + TMQ213 | 41 | 700 | 4.23 | 6.4 / 3.2 | 27 lb. + 19 lb. | 8.63 |
| 350 | 1/2 | G515 + TMQ213 | 81 | 700 | 2.12 | 8.8 / 4.4 | 29 lb. + 19 lb. | 9.13 |
| | 3/4 | G517 + TMQ213 | 122 | 700 | 1.41 | 10.8 / 5.4 | 31 lb. + 19 lb. | 9.63 |
| 5:1 | 1 | G519 + TMQ213 | 163 | 700 | 1.06 | 12.8 / 6.4 | 37 lb. + 19 lb. | 10.13 |
| Ratio | 1-1/2 | G531 + TMQ215 | 248 | 860 | 1.03 | 19.0 / 9.5 | 43 lb. + 24 lb. | 11.76 |
| | 2 | # G575 + TMQ220 | 333 | 1000 | 1.26 | 20.0 / 10.0 | 51 lb. + 30 lb. | 12.76 |
| | 1/4 | G511 + TMQ213 | 56 | 700 | 3.48 | 4.2 / 2.1 | 16 lb. + 19 lb. | 7.88 |
| 233 | 1/2 | G515 + TMQ213 | 112 | 700 | 1.74 | 8.0 / 4.0 | 23 lb. + 19 lb. | 9.13 |
| | 3/4 | G517 + TMQ213 | 168 | 700 | 1.16 | 11.0 / 5.5 | 30 lb. + 19 lb. | 10.26 |
| 7-1/2:1 | 1 | G519 + TMQ215 | 238 | 860 | 1.24 | 13.4 / 6.7 | 31 lb. + 24 lb. | 10.76 |
| Ratio | 1-1/2 | G531 + TMQ218 | 363 | 790 | 1.11 | 15.2 / 7.6 | 40 lb. + 26 lb. | 11.76 |
| | 2 | # G575 + TMQ220 | 489 | 1035 | 1.19 | 20.0 / 10.0 | 51 lb. + 30 lb. | 12.76 |
| | 1/4 | G511 + TMQ213 | 78 | 700 | 2.93 | 4.2 / 2.1 | 16 lb. + 19 lb. | 7.88 |
| 175 | 1/2 | G515 + TMQ213 | 156 | 700 | 1.47 | 8.0 / 4.0 | 23 lb. + 19 lb. | 8.13 |
| | 3/4 | G517 + TMQ215 | 230 | 860 | 1.36 | 11.0 / 5.5 | 30 lb. + 24 lb. | 10.26 |
| 10:1 | 1 | G519 + TMQ215 | 307 | 860 | 1.02 | 13.4 / 6.7 | 31 lb. + 24 lb. | 10.76 |
| Ratio | 1-1/2 | G531 + TMQ220 | 490 | 1065 | 1.39 | 15.2 / 7.6 | 40 lb. + 30 lb. | 11.76 |
| | 2 | # G575 + TMQ220 | 653 | 1065 | 1.15 | 20.0 / 10.0 | 51 lb. + 30 lb. | 12.76 |
| | 1/4 | G511 + TMQ213 | 111 | 700 | 2.20 | 4.2 / 2.1 | 16 lb. + 19 lb. | 7.88 |
| 117 | 1/2 | G515 + TMQ213 | 222 | 700 | 1.10 | 8.0 / 4.0 | 23 lb. + 19 lb. | 9.13 |
| | 3/4 | G517 + TMQ215 | 324 | 860 | 1.03 | 11.0 / 5.5 | 30 lb. + 24 lb. | 10.26 |
| 15:1 | 1 | G519 + TMQ218 | 461 | 790 | 1.03 | 13.4 / 6.7 | 31 lb. + 26 lb. | 10.76 |
| Ratio | 1-1/2 | G531 + TMQ220 | 709 | 1125 | 1.04 | 15.2 / 7.6 | 40 lb. + 30 lb. | 11.76 |
| | 2 | # G575 + TMQ224 | 951 | 1770 | 1.15 | 20.0 / 10.0 | 51 lb. + 54 lb. | 12.76 |
| | 1/4 | G511 + TMQ213 | 142 | 700 | 1.75 | 4.2 / 2.1 | 16 lb. + 19 lb. | 7.88 |
| 88 | 1/2 | G515 + TMQ215 | 273 | 860 | 1.28 | 8.0 / 4.0 | 23 lb. + 24 lb. | 8.13 |
| | 3/4 | G517 + TMQ218 | 443 | 860 | 1.09 | 11.0 / 5.5 | 30 lb. + 26 lb. | 10.26 |
| 20:1 | 1 | G519 + TMQ220 | 608 | 1175 | 1.24 | 13.4 / 6.7 | 31 lb. + 33 lb. | 10.76 |
| Ratio | 1-1/2 | G531 + TMQ224 | 920 | 1770 | 1.22 | 15.2 / 7.6 | 40 lb. + 30 lb. | 11.76 |
| | 2 | # G575 + TMQ226 | 1246 | 1625 | 1.19 | 20.0 / 10.0 | 51 lb. + 30 lb. | 12.76 |

# = Marathon Motor with Removable Base (Four-In-One)

Output torque is measured in inch-pounds. Overhung load is measured in pounds.

See page 154 for “AG” dimension on drawing.

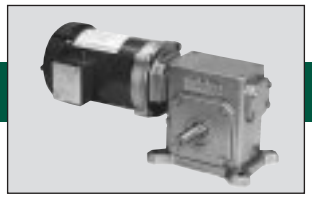

# Style TMQ

## AC Gearmotor

### Single Phase • Totally Enclosed
### 115/208-230 VAC - 60 HZ
### 1750 RPM Input Speed

| Output RPM | Motor HP | Model Number Motor + Reducer | Output TQ (IN. LBS.) | OHL (LBS.) | Service Factor | F.L. AMPS 115V/230V | Apprx. Weight Motor + Reducer | AG Dim. |
|---|---|---|---|---|---|---|---|---|
| 70 | 1/4 | G511 + TMQ213 | 167 | 700 | 1.50 | 4.2 / 2.1 | 16 lb. + 19 lb. | 7.88 |
| | 1/2 | G515 + TMQ215 | 324 | 860 | 1.09 | 8.0 / 4.0 | 23 lb. + 24 lb. | 9.13 |
| 25:1 Ratio | 3/4 | G517 + TMQ220 | 557 | 1210 | 1.34 | 11.0 / 5.5 | 30 lb. + 33 lb. | 10.26 |
| | 1 | G519 + TMQ220 | 743 | 1210 | 1.01 | 13.4 / 6.7 | 31 lb. + 33 lb. | 10.76 |
| | 1-1/2 | G531 + TMQ224 | 1117 | 1770 | 1.01 | 15.2 / 7.6 | 40 lb. + 54 lb. | 11.76 |
| | 2 | # G575 + TMQ230 | 1517 | 2170 | 1.38 | 20.0 / 10.0 | 51 lb. / 96 lb. | 12.76 |
| 58 | 1/4 | G511 + TMQ213 | 191 | 700 | 1.31 | 4.2 / 2.1 | 16 lb. + 19 lb. | 7.88 |
| | 1/2 | G515 + TMQ218 | 408 | 790 | 1.19 | 8.0 / 4.0 | 23 lb. + 26 lb. | 9.13 |
| 30:1 Ratio | 3/4 | G517 + TMQ220 | 638 | 1255 | 1.19 | 11.0 / 5.5 | 30 lb. + 33 lb. | 10.26 |
| | 1 | G519 + TMQ224 | 859 | 1770 | 1.32 | 13.4 / 6.7 | 31 lb. + 54 lb. | 10.76 |
| | 1-1/2 | G531 + TMQ226 | 1335 | 1625 | 1.10 | 15.2 / 7.6 | 40 lb. + 69 lb. | 11.76 |
| | 2 | # G575 + TMQ230 | 1765 | 2170 | 1.19 | 20.0 / 10.0 | 51 lb. / 96 lb. | 12.76 |
| 44 | 1/4 | G511 + TMQ213 | 237 | 700 | 1.04 | 4.2 / 2.1 | 16 lb. + 19 lb. | 7.88 |
| | 1/2 | G515 + TMQ220 | 523 | 1315 | 1.42 | 8.0 / 4.0 | 23 lb. + 33 lb. | 9.13 |
| 40:1 Ratio | 3/4 | G517 + TMQ224 | 808 | 1770 | 1.39 | 11.0 / 5.5 | 30 lb. + 54 lb. | 10.26 |
| | 1 | G519 + TMQ224 | 1078 | 1770 | 1.04 | 13.4 / 6.7 | 31 lb. + 54 lb. | 10.76 |
| | 1-1/2 | G531 + TMQ230 | 1663 | 2170 | 1.21 | 15.2 / 7.6 | 40 lb. + 96 lb. | 11.76 |
| | 2 | # G575 + TMQ232 | 2250 | 2275 | 1.17 | 20.0 / 10.0 | 51 lb. / 99 lb. | 12.76 |
| 35 | 1/4 | G511 + TMQ215 | 256 | 860 | 1.32 | 4.2 / 2.1 | 16 lb. + 24 lb. | 7.88 |
| | 1/2 | G515 + TMQ220 | 638 | 1385 | 1.13 | 8.0 / 4.0 | 23 lb. + 33 lb. | 9.13 |
| 50:1 Ratio | 3/4 | G517 + TMQ224 | 960 | 1770 | 1.13 | 11.0 / 5.5 | 30 lb. + 54 lb. | 10.26 |
| | 1 | G519 + TMQ226 | 1325 | 1625 | 1.08 | 13.4 / 6.7 | 31 lb. + 69 lb. | 10.76 |
| | 1-1/2 | G531 + TMQ230 | 1980 | 2170 | 1.02 | 15.2 / 7.6 | 40 lb. + 96 lb. | 11.76 |
| 29 | 1/4 | G511 + TMQ215 | 285 | 860 | 1.13 | 4.2 / 2.1 | 16 lb. + 24 lb. | 7.88 |
| | 1/2 | G515 + TMQ224 | 747 | 1770 | 1.35 | 8.0 / 4.0 | 23 lb. + 54 lb. | 9.13 |
| 60:1 Ratio | 3/4 | G517 + TMQ226 | 1143 | 1625 | 1.18 | 11.0 / 5.5 | 30 lb. + 69 lb. | 10.26 |
| | 1 | G519 + TMQ230 | 1505 | 2170 | 1.28 | 13.4 / 6.7 | 31 lb. + 96 lb. | 10.76 |
| | 1-1/2 | G531 + TMQ232 | 2324 | 2275 | 1.05 | 15.2 / 7.6 | 40 lb. + 99 lb. | 11.76 |
| 22 | 1/4 | G511 + TMQ220 | 450 | 1495 | 1.22 | 4.2 / 2.1 | 16 lb. + 26 lb. | 7.88 |
| | 1/2 | G515 + TMQ226 | 946 | 1625 | 1.15 | 8.0 / 4.0 | 23 lb. + 69 lb. | 9.13 |
| 80:1 Ratio | 3/4 | G517 + TMQ230 | 1412 | 2170 | 1.19 | 11.0 / 5.5 | 30 lb. + 96 lb. | 10.26 |
| | 1 | G519 + TMQ232 | 1943 | 2275 | 1.03 | 13.4 / 6.7 | 31 lb. + 99 lb. | 10.76 |
| 18 | 1/4 | G511 + TMQ224 | 528 | 1770 | 1.23 | 4.2 / 2.1 | 16 lb. + 54 lb. | 7.88 |
| 100:1 Ratio | 1/2 | G515 + TMQ230 | 1076 | 2170 | 1.21 | 8.0 / 4.0 | 23 lb. + 69 lb. | 9.13 |

# = Marathon Motor with Removable Base (Four-In-One)

Output torque is measured in inch-pounds. Overhung load is measured in pounds.

See page 154 for "AG" dimension on drawing.

# Style BMQ

## AC Washdown Duty Gearmotor

### Single Phase • Totally Enclosed
### 115/208-230 Vac - 60 HZ
### 1750 RPM Input Speed

| Output RPM | Motor HP | Model Number Motor + Reducer | Output TQ (IN. LBS.) | OHL (LBS.) | Service Factor | F.L. AMPS 115V/230V | Apprx. Weight Motor + Reducer | AG Dim. |
|---|---|---|---|---|---|---|---|---|
| 350 5:01 Ratio | 1/3 | N531 + BMQ213 | 41 | 700 | 4.23 | 6.4 / 3.2 | 27 lb. + 17 lb. | 8.63 |
| | 1/2 | N523 + BMQ213 | 81 | 700 | 2.12 | 8.8 / 4.4 | 29 lb. + 17 lb. | 9.13 |
| | 3/4 | N525 + BMQ213 | 122 | 700 | 1.41 | 10.8 / 5.4 | 31 lb. + 17 lb. | 9.63 |
| | 1 | N527 + BMQ213 | 163 | 700 | 1.06 | 12.8 / 6.4 | 37 lb. + 17 lb. | 10.13 |
| | 1 1/2 | N529 + BMQ215 | 248 | 860 | 1.03 | 19.0 / 9.5 | 43 lb. + 22 lb. | 11.63 |
| 233 7-1/2 : 1 Ratio | 1/3 | N531 + BMQ213 | 56 | 700 | 3.48 | 6.4 / 3.2 | 27 lb. + 17 lb. | 8.63 |
| | 1/2 | N523 + BMQ213 | 112 | 700 | 1.74 | 8.8 / 4.4 | 29 lb. + 17 lb. | 9.13 |
| | 3/4 | N525 + BMQ213 | 168 | 700 | 1.16 | 10.8 / 5.4 | 31 lb. + 17 lb. | 9.63 |
| | 1 | N527 + BMQ215 | 238 | 860 | 1.24 | 12.8 / 6.4 | 37 lb. + 22 lb. | 10.13 |
| | 1 1/2 | N529 + BMQ218 | 363 | 790 | 1.11 | 19.0 / 9.5 | 43 lb. + 24 lb. | 11.63 |
| 175 10:01 Ratio | 1/3 | N531 + BMQ213 | 78 | 700 | 2.93 | 6.4 / 3.2 | 27 lb. + 17 lb. | 8.63 |
| | 1/2 | N523 + BMQ213 | 156 | 700 | 1.47 | 8.8 / 4.4 | 29 lb. + 17 lb. | 9.13 |
| | 3/4 | N525 + BMQ215 | 230 | 860 | 1.36 | 10.8 / 5.4 | 31 lb. + 22 lb. | 9.63 |
| | 1 | N527 + BMQ215 | 307 | 860 | 1.02 | 12.8 / 6.4 | 37 lb. + 22 lb. | 10.13 |
| | 1 1/2 | N529 + BMQ220 | 490 | 1065 | 1.39 | 19.0 / 9.5 | 43 lb. + 30 lb. | 11.63 |
| 117 15:01 Ratio | 1/3 | N531 + BMQ213 | 111 | 700 | 2.20 | 6.4 / 3.2 | 27 lb. + 17 lb. | 8.63 |
| | 1/2 | N523 + BMQ213 | 222 | 700 | 1.10 | 8.8 / 4.4 | 29 lb. + 17 lb. | 9.13 |
| | 3/4 | N525 + BMQ215 | 324 | 860 | 1.03 | 10.8 / 5.4 | 31 lb. + 22 lb. | 9.63 |
| | 1 | N527 + BMQ218 | 461 | 790 | 1.03 | 12.8 / 6.4 | 37 lb. + 24 lb. | 10.13 |
| | 1 1/2 | N529 + BMQ220 | 709 | 1125 | 1.04 | 19.0 / 9.5 | 43 lb. + 30 lb. | 11.63 |
| 88 20:1 Ratio | 1/3 | N531 + BMQ213 | 142 | 700 | 1.75 | 6.4 / 3.2 | 27 lb. + 17 lb. | 8.63 |
| | 1/2 | N523 + BMQ215 | 273 | 860 | 1.28 | 8.8 / 4.4 | 29 lb. + 22 lb. | 9.13 |
| | 3/4 | N525 + BMQ218 | 443 | 790 | 1.09 | 10.8 / 5.4 | 31 lb. + 24 lb. | 9.63 |
| | 1 | N527 + BMQ220 | 608 | 1175 | 1.24 | 12.8 / 6.4 | 37 lb. + 30 lb. | 10.13 |
| | 1 1/2 | N529 + BMQ224 | 920 | 1770 | 1.22 | 19.0 / 9.5 | 43 lb. + 46 lb. | 11.63 |
| 70 25:1 Ratio | 1/3 | N531 + BMQ213 | 167 | 700 | 1.50 | 6.4 / 3.2 | 27 lb. + 17 lb. | 8.63 |
| | 1/2 | N523 + BMQ215 | 324 | 860 | 1.09 | 8.8 / 4.4 | 29 lb. + 22 lb. | 9.13 |
| | 3/4 | N525 + BMQ220 | 557 | 1210 | 1.34 | 10.8 / 5.4 | 31 lb. + 30 lb. | 9.63 |
| | 1 | N527 + BMQ220 | 743 | 1210 | 1.01 | 12.8 / 6.4 | 37 lb. + 30lb. | 10.13 |
| | 1 1/2 | N529 + BMQ224 | 1117 | 1770 | 1.01 | 19.0 / 9.5 | 43 lb. + 46 lb. | 11.63 |
| 58 30:1 Ratio | 1/3 | N531 + BMQ213 | 191 | 700 | 1.31 | 6.4 / 3.2 | 27 lb. + 17 lb. | 8.63 |
| | 1/2 | N523 + BMQ218 | 408 | 790 | 1.19 | 8.8 / 4.4 | 29 lb. + 24 lb. | 9.13 |
| | 3/4 | N525 + BMQ220 | 638 | 1255 | 1.19 | 10.8 / 5.4 | 31 lb. + 30 lb. | 9.63 |
| | 1 | N527 + BMQ224 | 859 | 1770 | 1.32 | 12.8 / 6.4 | 37 lb. + 46 lb. | 10.13 |
| | 1 1/2 | N529 + BMQ226 | 1335 | 1625 | 1.10 | 19.0 / 9.5 | 43 lb. + 59 lb. | 11.63 |
| 44 40:1 Ratio | 1/3 | N531 + BMQ213 | 237 | 700 | 1.04 | 6.4 / 3.2 | 27 lb. + 17 lb. | 8.63 |
| | 1/2 | N523 + BMQ220 | 523 | 1315 | 1.42 | 8.8 / 4.4 | 29 lb. + 30 lb. | 9.13 |
| | 3/4 | N525 + BMQ224 | 808 | 1770 | 1.39 | 10.8 / 5.4 | 31 lb. + 46 lb. | 9.63 |
| | 1 | N527 + BMQ224 | 1078 | 1770 | 1.04 | 12.8 / 6.4 | 37 lb. + 46 lb. | 10.13 |
| | 1 1/2 | N529 + BMQ230 | 1663 | 2170 | 1.21 | 19.0 / 9.5 | 43 lb. + 80 lb. | 11.63 |
| 35 50:1 Ratio | 1/3 | N531 + BMQ215 | 256 | 860 | 1.32 | 6.4 / 3.2 | 27 lb. + 22 lb. | 8.63 |
| | 1/2 | N523 + BMQ220 | 638 | 1385 | 1.13 | 8.8 / 4.4 | 29 lb. + 30 lb. | 9.13 |
| | 3/4 | N525 + BMQ224 | 960 | 1770 | 1.13 | 10.8 / 5.4 | 31 lb. + 46 lb. | 9.63 |
| | 1 | N527 + BMQ226 | 1325 | 1625 | 1.08 | 12.8 / 6.4 | 37 lb. + 59 lb. | 10.13 |
| | 1 1/2 | N529 + BMQ230 | 1980 | 2170 | 1.02 | 19.0 / 9.5 | 43 lb. + 80 lb. | 11.63 |
| 29 60:1 Ratio | 1/3 | N531 + BMQ215 | 285 | 860 | 1.13 | 6.4 / 3.2 | 27 lb. + 22 lb. | 8.63 |
| | 1/2 | N523 + BMQ224 | 747 | 1770 | 1.35 | 8.8 / 4.4 | 29 lb. + 46 lb. | 9.13 |
| | 3/4 | N525 + BMQ226 | 1143 | 1625 | 1.18 | 10.8 / 5.4 | 31 lb. + 59 lb. | 9.63 |
| | 1 | N527 + BMQ230 | 1505 | 2170 | 1.28 | 12.8 / 6.4 | 37 lb. + 80 lb. | 10.13 |
| | 1 1/2 | N529 + BMQ232 | 2324 | 2275 | 1.05 | 19.0 / 9.5 | 43 lb. + 83 lb. | 11.63 |
| 22 80:1 Ratio | 1/3 | N531 + BMQ220 | 450 | 473 | 1.22 | 6.4 / 3.2 | 27 lb. + 30 lb. | 8.63 |
| | 1/2 | N523 + BMQ226 | 946 | 1107 | 1.15 | 8.8 / 4.4 | 29 lb. + 59 lb. | 9.13 |
| | 3/4 | N525 + BMQ230 | 1412 | 1039 | 1.19 | 10.8 / 5.4 | 31 lb. + 80 lb. | 9.63 |
| | 1 | N527 + BMQ232 | 1943 | 1518 | 1.03 | 12.8 / 6.4 | 37 lb. + 83 lb. | 10.13 |
| 18 100:1 Ratio | 1/3 | N531 + BMQ224 | 528 | 1770 | 1.23 | 6.4 / 3.2 | 27 lb. + 46 lb. | 8.63 |
| | 1/2 | N523 + BMQ230 | 1096 | 2170 | 1.21 | 8.8 / 4.4 | 29 lb. + 80 lb. | 9.13 |

Output torque is measured in inch-pounds. Overhung load is measured in pounds.
See page 154 for "AG" dimension on drawing.

# Style TMQ

## AC Washdown Duty Gearmotor

**Single Phase • Totally Enclosed**
**115/208-230 Vac - 60 HZ**
**1750 RPM Input Speed**

| Output RPM | Motor HP | Model Number Motor + Reducer | Output TQ (IN. LBS.) | OHL (LBS.) | Service Factor | F.L. AMPS 230V | Apprx. Weight Motor + Reducer | AG Dim. |
|---|---|---|---|---|---|---|---|---|
| 350 5:01 Ratio | 1/3 | N531 + TMQ213 | 41 | 700 | 4.23 | 6.4 / 3.2 | 27 lb. + 19 lb. | 8.63 |
| | 1/2 | N523 + TMQ213 | 81 | 700 | 2.12 | 8.8 / 4.4 | 29 lb. + 19 lb. | 9.13 |
| | 3/4 | N525 + TMQ213 | 122 | 700 | 1.41 | 10.8 / 5.4 | 31 lb. + 19 lb. | 9.63 |
| | 1 | N527 + TMQ213 | 163 | 700 | 1.06 | 12.8 / 6.4 | 37 lb. + 19 lb. | 10.13 |
| | 1 1/2 | N529 + TMQ215 | 248 | 860 | 1.03 | 19.0 / 9.5 | 43 lb. + 24 lb. | 11.63 |
| 233 7-1/2:1 Ratio | 1/3 | N531 + TMQ213 | 56 | 700 | 3.48 | 6.4 / 3.2 | 27 lb. + 19 lb. | 8.63 |
| | 1/2 | N523 + TMQ213 | 112 | 700 | 1.74 | 8.8 / 4.4 | 29 lb. + 19 lb. | 9.13 |
| | 3/4 | N525 + TMQ213 | 168 | 700 | 1.16 | 10.8 / 5.4 | 31 lb. + 19 lb. | 9.63 |
| | 1 | N527 + TMQ215 | 238 | 860 | 1.24 | 12.8 / 6.4 | 37 lb. + 24 lb. | 10.13 |
| | 1 1/2 | N529 + TMQ218 | 363 | 790 | 1.11 | 19.0 / 9.5 | 43 lb. + 26 lb. | 11.63 |
| 175 10:01 Ratio | 1/3 | N531 + TMQ213 | 78 | 700 | 2.93 | 6.4 / 3.2 | 27 lb. + 19 lb. | 8.63 |
| | 1/2 | N523 + TMQ213 | 156 | 700 | 1.47 | 8.8 / 4.4 | 29 lb. + 17 lb. | 9.13 |
| | 3/4 | N525 + TMQ215 | 230 | 860 | 1.36 | 10.8 / 5.4 | 31 lb. + 24 lb. | 9.63 |
| | 1 | N527 + TMQ215 | 307 | 860 | 1.02 | 12.8 / 6.4 | 37 lb. + 24 lb. | 10.13 |
| | 1 1/2 | N529 + TMQ220 | 490 | 1065 | 1.39 | 19.0 / 9.5 | 43 lb. + 33 lb. | 11.63 |
| 117 15:01 Ratio | 1/3 | N531 + TMQ213 | 111 | 700 | 2.20 | 6.4 / 3.2 | 27 lb. + 19 lb. | 8.63 |
| | 1/2 | N523 + TMQ213 | 222 | 700 | 1.10 | 8.8 / 4.4 | 29 lb. + 19 lb. | 9.13 |
| | 3/4 | N525 + TMQ215 | 324 | 860 | 1.03 | 10.8 / 5.4 | 31 lb. + 24 lb. | 9.63 |
| | 1 | N527 + TMQ218 | 461 | 790 | 1.03 | 12.8 / 6.4 | 37 lb. + 26 lb. | 10.13 |
| | 1 1/2 | N529 + TMQ220 | 709 | 1125 | 1.04 | 19.0 / 9.5 | 43 lb. + 33 lb. | 11.63 |
| 88 20:1 Ratio | 1/3 | N531 + TMQ213 | 142 | 700 | 1.75 | 6.4 / 3.2 | 27 lb. + 19 lb. | 8.63 |
| | 1/2 | N523 + TMQ215 | 273 | 860 | 1.28 | 8.8 / 4.4 | 29 lb. + 24 lb. | 9.13 |
| | 3/4 | N525 + TMQ218 | 443 | 790 | 1.09 | 10.8 / 5.4 | 31 lb. + 26 lb. | 9.63 |
| | 1 | N527 + TMQ220 | 608 | 1175 | 1.24 | 12.8 / 6.4 | 37 lb. + 33 lb. | 10.13 |
| | 1 1/2 | N529 + TMQ224 | 920 | 1770 | 1.22 | 19.0 / 9.5 | 43 lb. + 54 lb. | 11.63 |
| 70 25:1 Ratio | 1/3 | N531 + TMQ213 | 167 | 700 | 1.50 | 6.4 / 3.2 | 27 lb. + 19 lb. | 8.63 |
| | 1/2 | N523 + TMQ215 | 324 | 860 | 1.09 | 8.8 / 4.4 | 29 lb. + 24 lb. | 9.13 |
| | 3/4 | N525 + TMQ220 | 557 | 1210 | 1.34 | 10.8 / 5.4 | 31 lb. + 33 lb. | 9.63 |
| | 1 | N527 + TMQ220 | 743 | 1210 | 1.01 | 12.8 / 6.4 | 37 lb. + 33 lb. | 10.13 |
| | 1 1/2 | N529 + TMQ224 | 1117 | 1770 | 1.01 | 19.0 / 9.5 | 43 lb. + 54 lb. | 11.63 |
| 58 30:1 Ratio | 1/3 | N531 + TMQ213 | 191 | 700 | 1.31 | 6.4 / 3.2 | 27 lb. + 19 lb. | 8.63 |
| | 1/2 | N523 + TMQ218 | 408 | 790 | 1.19 | 8.8 / 4.4 | 29 lb. + 26 lb. | 9.13 |
| | 3/4 | N525 + TMQ220 | 638 | 1255 | 1.19 | 10.8 / 5.4 | 31 lb. + 33 lb. | 9.63 |
| | 1 | N527 + TMQ224 | 859 | 1770 | 1.32 | 12.8 / 6.4 | 37 lb. + 33 lb. | 10.13 |
| | 1 1/2 | N529 + TMQ226 | 1335 | 1625 | 1.10 | 19.0 / 9.5 | 43 lb. + 69 lb. | 11.63 |
| 44 40:1 Ratio | 1/3 | N531 + TMQ213 | 237 | 700 | 1.04 | 6.4 / 3.2 | 27 lb. + 19 lb. | 8.63 |
| | 1/2 | N523 + TMQ220 | 523 | 1315 | 1.42 | 8.8 / 4.4 | 29 lb. + 33 lb. | 9.13 |
| | 3/4 | N525 + TMQ224 | 808 | 1770 | 1.39 | 10.8 / 5.4 | 31 lb. + 54 lb. | 9.63 |
| | 1 | N527 + TMQ224 | 1078 | 1770 | 1.04 | 12.8 / 6.4 | 37 lb. + 54 lb. | 10.13 |
| | 1 1/2 | N529 + TMQ230 | 1663 | 2170 | 1.21 | 19.0 / 9.5 | 43 lb. + 96 lb. | 11.63 |
| 35 50:1 Ratio | 1/3 | N531 + TMQ215 | 256 | 860 | 1.32 | 6.4 / 3.2 | 27 lb. + 24 lb. | 8.63 |
| | 1/2 | N523 + TMQ220 | 638 | 1385 | 1.13 | 8.8 / 4.4 | 29 lb. + 33 lb. | 9.13 |
| | 3/4 | N525 + TMQ224 | 960 | 1770 | 1.13 | 10.8 / 5.4 | 31 lb. + 54 lb. | 9.63 |
| | 1 | N527 + TMQ226 | 1325 | 1625 | 1.08 | 12.8 / 6.4 | 37 lb. + 69 lb. | 10.13 |
| | 1 1/2 | N529 + TMQ230 | 1980 | 2170 | 1.02 | 19.0 / 9.5 | 43 lb. + 96 lb. | 11.63 |
| 29 60:1 Ratio | 1/3 | N531 + TMQ215 | 285 | 860 | 1.13 | 6.4 / 3.2 | 27 lb. + 24 lb. | 8.63 |
| | 1/2 | N523 + TMQ224 | 747 | 1770 | 1.35 | 8.8 / 4.4 | 29 lb. + 54 lb. | 9.13 |
| | 3/4 | N525 + TMQ226 | 1143 | 1625 | 1.18 | 10.8 / 5.4 | 31 lb. + 69 lb. | 9.63 |
| | 1 | N527 + TMQ230 | 1505 | 2170 | 1.28 | 12.8 / 6.4 | 37 lb. + 96 lb. | 10.13 |
| | 1 1/2 | N529 + TMQ232 | 2324 | 2275 | 1.05 | 19.0 / 9.5 | 43 lb. + 99 lb. | 11.63 |
| 22 80:1 Ratio | 1/3 | N531 + TMQ220 | 450 | 1495 | 1.22 | 6.4 / 3.2 | 27 lb. + 33 lb. | 8.63 |
| | 1/2 | N523 + TMQ226 | 946 | 1625 | 1.15 | 8.8 / 4.4 | 29 lb. + 69 lb. | 9.13 |
| | 3/4 | N525 + TMQ230 | 1412 | 2170 | 1.19 | 10.8 / 5.4 | 31 lb. + 96 lb. | 9.63 |
| | 1 | N527 + TMQ232 | 1943 | 2275 | 1.03 | 12.8 / 6.4 | 37 lb. + 99 lb. | 10.13 |
| 18 100:1 Ratio | 1/3 | N531 + TMQ224 | 528 | 1770 | 1.23 | 6.4 / 3.2 | 27 lb. + 54 lb. | 8.63 |
| | 1/2 | N523 + TMQ230 | 1096 | 2170 | 1.21 | 8.8 / 4.4 | 29 lb. + 96 lb. | 9.13 |

Output torque is measured in inch-pounds. Overhung load is measured in pounds.
See page 154 for "AG" dimension on drawing.

# Style BMQ

## AC Gearmotor

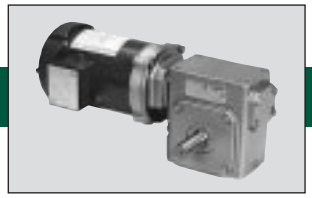

### Three Phase • Totally Enclosed
### 208/230 - 460 VAC - 60 HZ
### 1750 RPM Input Speed

| Output RPM | Motor HP | Model Number Motor + Reducer | Output TQ (IN. LBS.) | OHL (LBS.) | Service Factor | F.L. AMPS 230V/460V | Apprx. Weight Motor + Reducer | AG Dim. |
|---|---|---|---|---|---|---|---|---|
| | 1/4 | G547 + BMQ213 | 41 | 700 | 4.23 | 1.3 / 0.65 | 14 lb. + 17 lb. | 7.88 |
| | 1/2 | G507 + BMQ213 | 81 | 700 | 2.12 | 2.2 / 1.1 | 17 lb. + 17 lb. | 8.83 |
| 350 | 3/4 | G522 + BMQ213 | 122 | 700 | 1.41 | 2.8 / 1.4 | 21 lb. + 17 lb. | 9.13 |
| | 1 | G527 + BMQ213 | 163 | 700 | 1.06 | 3.6 / 1.8 | 27 lb. + 17 lb. | 10.26 |
| 5:1 | 1-1/2 | G541 + BMQ215 | 248 | 860 | 1.03 | 4.8 / 2.4 | 29 lb. + 22 lb. | 10.26 |
| Ratio | 2 | C222 + BMQ220 | 333 | 1000 | 1.26 | 5.8 / 2.9 | 39 lb. + 30 lb. | 11.76 |
| | 3 | C223 + BMQ224 | 504 | 1770 | 1.30 | 8.0 / 4.0 | 76 lb. + 46 lb. | 13.07 |
| | 5 | C224 + BMQ230 | 846 | 2170 | 1.33 | 13.0 / 6.5 | 92 lb. + 80 lb. | 14.07 |
| | 7-1/2 | C225 + BMQ232 | 1315 | 2275 | 1.22 | 19.4 / 9.7 | 103 lb. + 83 lb. | 16.34 |
| | 1/4 | G547 + BMQ213 | 56 | 700 | 3.48 | 1.3 / 0.65 | 14 lb. + 17 lb. | 7.88 |
| | 1/2 | G507 + BMQ213 | 112 | 700 | 1.74 | 2.2 / 1.1 | 17 lb. + 17 lb. | 8.83 |
| 233 | 3/4 | G522 + BMQ213 | 168 | 700 | 1.16 | 2.8 / 1.4 | 21 lb. + 17 lb. | 9.13 |
| | 1 | G527 + BMQ215 | 238 | 860 | 1.24 | 3.6 / 1.8 | 27 lb. + 22 lb. | 10.26 |
| 7-1/2:1 | 1-1/2 | G541 + BMQ218 | 363 | 790 | 1.11 | 4.8 / 2.4 | 29 lb. + 24 lb. | 10.26 |
| Ratio | 2 | C222 + BMQ220 | 489 | 1035 | 1.19 | 5.8 / 2.9 | 39 lb. + 30 lb. | 11.76 |
| | 3 | C223 + BMQ224 | 748 | 1625 | 1.16 | 8.0 / 4.0 | 76 lb. + 46 lb. | 13.07 |
| | 5 | C224 + BMQ230 | 1257 | 2170 | 1.21 | 13.0 / 6.5 | 92 lb. + 80 lb. | 14.07 |
| | 1/4 | G547 + BMQ213 | 78 | 700 | 2.93 | 1.3 / 0.65 | 14 lb. + 17 lb. | 7.88 |
| | 1/2 | G507 = BMQ213 | 156 | 700 | 1.47 | 2.2 / 1.1 | 17 lb. + 17 lb. | 8.83 |
| 175 | 3/4 | G522 + BMQ215 | 230 | 860 | 1.36 | 2.8 / 1.4 | 21 lb. + 22 lb. | 9.13 |
| | 1 | G527 + BMQ215 | 307 | 860 | 1.02 | 3.6 / 1.8 | 27 lb. + 22 lb. | 10.26 |
| 10:1 | 1-1/2 | G541 + BMQ220 | 490 | 1065 | 1.39 | 4.8 / 2.4 | 29 lb. + 30 lb. | 10.26 |
| Ratio | 2 | C222 + BMQ220 | 653 | 1065 | 1.05 | 5.8 / 2.9 | 39 lb. + 30 lb. | 11.76 |
| | 3 | C223 + BMQ224 | 984 | 1770 | 1.03 | 8.0 / 4.0 | 76 lb. + 46 lb. | 13.07 |
| | 5 | C224 + BMQ 230 | 1653 | 2170 | 1.09 | 13.0 / 6.5 | 92 lb. + 80 lb. | 14.07 |
| | 1/4 | G547 + BMQ213 | 111 | 700 | 2.20 | 1.3 / 0.65 | 14 lb. + 17 lb. | 7.88 |
| | 1/2 | G507 = BMQ213 | 222 | 700 | 1.10 | 2.2 / 1.1 | 17 lb. + 17 lb. | 8.63 |
| 117 | 3/4 | G522 + BMQ215 | 324 | 860 | 1.03 | 2.8 / 1.4 | 21 lb. + 22 lb. | 9.13 |
| | 1 | G527 + BMQ218 | 461 | 790 | 1.03 | 3.6 / 1.8 | 27 lb. + 24 lb. | 10.26 |
| 15:1 | 1-1/2 | G541 + BMQ220 | 709 | 1125 | 1.04 | 4.8 / 2.4 | 29 lb. + 30 lb. | 10.26 |
| Ratio | 2 | C222 + BMQ224 | 951 | 1770 | 1.15 | 5.8 / 2.9 | 39 lb. + 46 lb. | 11.76 |
| | 3 | C223 + BMQ230 | 1445 | 2170 | 1.40 | 8.0 / 4.0 | 76 lb. + 80 lb. | 13.57 |
| | 5 | C224 + BMQ 232 | 2417 | 2275 | 1.06 | 13.0 / 6.5 | 92 lb. + 83 lb. | 14.57 |
| | 1/4 | G547 + BMQ213 | 142 | 700 | 1.75 | 1.3 / 0.65 | 14 lb. + 17 lb. | 7.88 |
| | 1/2 | G507 = BMQ215 | 273 | 860 | 1.28 | 2.2 / 1.1 | 17 lb. + 22 lb. | 8.63 |
| 88 | 3/4 | G522 + BMQ218 | 443 | 860 | 1.09 | 2.8 / 1.4 | 21 lb. + 24 lb. | 9.13 |
| | 1 | G527 + BMQ220 | 608 | 1175 | 1.24 | 3.6 / 1.8 | 27 lb. + 30 lb. | 10.26 |
| 20:1 | 1-1/2 | G541 + BMQ224 | 920 | 1770 | 1.22 | 4.8 / 2.4 | 29 lb. + 46 lb. | 10.26 |
| Ratio | 2 | C222 + BMQ226 | 1246 | 1625 | 1.19 | 5.8 / 2.9 | 39 lb. + 59 lb. | 11.76 |
| | 3 | C223 + BMQ230 | 1871 | 2170 | 1.08 | 8.0 / 4.0 | 76 lb. + 80 lb. | 13.57 |

Output torque is measured in inch-pounds. Overhung load is measured in pounds.

See page 154 for "AG" dimension on drawing.

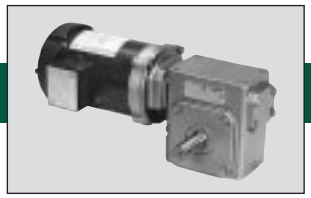

# Style BMQ

## AC Gearmotor

**Three Phase • Totally Enclosed**
**208/230 - 460 VAC - 60 HZ**
**1750 RPM Input Speed**

| Output RPM | Motor HP | Model Number Motor + Reducer | Output TQ (IN. LBS.) | OHL (LBS.) | Service Factor | F.L. AMPS 230V | Apprx. Weight Motor + Reducer | AG Dim. |
|---|---|---|---|---|---|---|---|---|
| 70 | 1/4 | G547 + BMQ213 | 167 | 700 | 1.50 | 1.2 / 0.65 | 14 lb. + 17 lb. | 7.88 |
| | 1/2 | G507 + BMQ215 | 324 | 860 | 1.09 | 2.2 / 1.1 | 17 lb. + 22 lb. | 8.63 |
| | 3/4 | G522 + BMQ220 | 557 | 1210 | 1.34 | 2.8 / 1.4 | 21 lb. + 30 lb. | 9.13 |
| 25:1 Ratio | 1 | G527 + BMQ220 | 743 | 1210 | 1.01 | 3.6 / 1.8 | 27 lb. + 30 lb. | 10.26 |
| | 1-1/2 | G541 + BMQ224 | 1117 | 1770 | 1.01 | 4.8 / 2.4 | 29 lb. + 46 lb. | 10.26 |
| | 2 | C222 + BMQ230 | 1517 | 2170 | 1.38 | 5.8 / 2.9 | 39 lb. + 80 lb. | 11.76 |
| | 3 | C223 + BMQ232 | 2302 | 2275 | 1.16 | 8.0 / 4.0 | 76 lb. + 83 lb. | 13.57 |
| 58 | 1/4 | G547 + BMQ213 | 191 | 700 | 1.31 | 1.2 / 0.65 | 14 lb. + 17 lb. | 7.88 |
| | 1/2 | G507 + BMQ218 | 408 | 790 | 1.19 | 2.2 / 1.1 | 17 lb. + 24 lb. | 8.63 |
| | 3/4 | G522 + BMQ220 | 638 | 1255 | 1.19 | 2.8 / 1.4 | 21 lb. + 30 lb. | 9.13 |
| 30:1 Ratio | 1 | G527 + BMQ224 | 859 | 1770 | 1.32 | 3.6 / 1.8 | 27 lb. + 30 lb. | 10.26 |
| | 1-1/2 | G541 + BMQ226 | 1335 | 1625 | 1.10 | 4.8 / 2.4 | 29 lb. + 59 lb. | 10.26 |
| | 2 | C222 + BMQ230 | 1765 | 2170 | 1.19 | 5.8 / 2.9 | 39 lb. + 80 lb. | 11.76 |
| | 3 | C223 + BMQ232 | 2649 | 2275 | 1.00 | 8.0 / 4.0 | 76 lb. + 83 lb. | 13.57 |
| 44 | 1/4 | G547 + BMQ213 | 237 | 700 | 1.04 | 1.2 / 0.65 | 14 lb. + 17 lb. | 7.88 |
| | 1/2 | G507 + BMQ220 | 523 | 1315 | 1.42 | 2.2 / 1.1 | 17 lb. + 30 lb. | 8.63 |
| | 3/4 | G522 + BMQ224 | 808 | 1770 | 1.39 | 2.8 / 1.4 | 21 lb. + 30 lb. | 9.13 |
| 40:1 Ratio | 1 | G527 + BMQ224 | 1078 | 1770 | 1.04 | 3.6 / 1.8 | 27 lb. + 30 lb. | 10.26 |
| | 1-1/2 | G541 + BMQ230 | 1663 | 2170 | 1.21 | 4.8 / 2.4 | 29 lb. + 80 lb. | 10.26 |
| | 2 | C222 + BMQ232 | 2250 | 2275 | 1.17 | 5.8 / 2.9 | 39 lb. + 83 lb. | 11.76 |
| 35 | 1/4 | G547 + BMQ215 | 256 | 860 | 1.32 | 1.2 / 0.65 | 14 lb. + 22 lb. | 7.88 |
| | 1/2 | G507 + BMQ220 | 638 | 1385 | 1.13 | 2.2 / 1.1 | 17 lb. + 30 lb. | 8.63 |
| 50:1 Ratio | 3/4 | G522 + BMQ224 | 960 | 1770 | 1.13 | 2.8 / 1.4 | 21 lb. + 30 lb. | 9.13 |
| | 1 | G527 + BMQ226 | 1325 | 1625 | 1.08 | 3.6 / 1.8 | 27 lb. + 59 lb. | 10.26 |
| | 1-1/2 | G541 + BMQ230 | 1980 | 2170 | 1.02 | 4.8 / 2.4 | 29 lb. + 80 lb. | 10.26 |
| 29 | 1/4 | G547 + BMQ215 | 285 | 860 | 1.13 | 1.2 / 0.65 | 14 lb. + 22 lb. | 7.88 |
| | 1/2 | G507 + BMQ224 | 747 | 1770 | 1.35 | 2.2 / 1.1 | 17 lb. + 30 lb. | 8.63 |
| 60:1 Ratio | 3/4 | G522 + BMQ226 | 1143 | 1625 | 1.18 | 2.8 / 1.4 | 21 lb. + 59 lb. | 9.13 |
| | 1 | G527 + BMQ230 | 1505 | 2170 | 1.28 | 3.6 / 1.8 | 27 lb. + 80 lb. | 10.26 |
| | 1-1/2 | G541 + BMQ232 | 2324 | 2275 | 1.05 | 4.8 / 2.4 | 29 lb. + 83 lb. | 10.26 |
| 22 | 1/4 | G547 + BMQ220 | 450 | 1495 | 1.22 | 1.2 / 0.65 | 14 lb. + 30 lb. | 7.88 |
| | 1/2 | G507 + BMQ226 | 946 | 1625 | 1.15 | 2.2 / 1.1 | 17 lb. + 59 lb. | 8.63 |
| 80:1 Ratio | 3/4 | G522 + BMQ230 | 1412 | 2170 | 1.19 | 2.8 / 1.4 | 21 lb. + 80 lb. | 9.13 |
| | 1 | G527 + BMQ232 | 1943 | 2275 | 1.03 | 3.6 / 1.8 | 27 lb. + 83 lb. | 10.26 |
| 18 | 1/4 | G547 + BMQ224 | 528 | 1770 | 1.23 | 1.2 / 0.65 | 14 lb. + 30 lb. | 7.88 |
| 100:1 Ratio | 1/2 | G507 + BMQ230 | 1096 | 2170 | 1.21 | 2.2 / 1.1 | 17 lb. + 80 lb. | 8.63 |

Output torque is measured in inch-pounds. Overhung load is measured in pounds.

See page 154 for "AG" dimension on drawing.

# Style TMQ

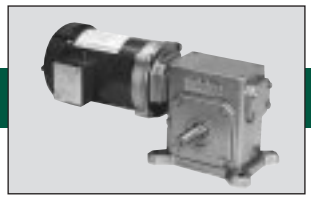

## AC Gearmotor

### Three Phase • Totally Enclosed
### 208/230 - 460 VAC - 60 HZ
### 1750 RPM Input Speed

| Output RPM | Motor HP | Model Number Motor + Reducer | Output TQ (IN. LBS.) | OHL (LBS.) | Service Factor | F.L. AMPS 230V/460V | Apprx. Weight Motor + Reducer | AG Dim. |
|---|---|---|---|---|---|---|---|---|
| | 1/4 | G547 + TMQ213 | 41 | 700 | 4.23 | 1.3 / 0.65 | 14 lb. + 19 lb. | 7.88 |
| | 1/2 | G507 + TMQ213 | 81 | 700 | 2.12 | 2.2 / 1.1 | 17 lb. + 19 lb. | 8.83 |
| 350 | 3/4 | G522 + TMQ213 | 122 | 700 | 1.41 | 2.8 / 1.4 | 21 lb. + 19 lb. | 9.13 |
| | 1 | G527 + TMQ213 | 163 | 700 | 1.06 | 3.6 / 1.8 | 27 lb. + 19 lb. | 10.26 |
| 5:1 | 1-1/2 | G541 + TMQ215 | 248 | 860 | 1.03 | 4.8 / 2.4 | 29 lb. + 24 lb. | 10.26 |
| Ratio | 2 | C222 + TMQ220 | 333 | 1000 | 1.26 | 5.8 / 2.9 | 39 lb. + 33 lb. | 11.76 |
| | 3 | C223 + TMQ224 | 504 | 1770 | 1.30 | 8.0 / 4.0 | 76 lb. + 54 lb. | 13.07 |
| | 5 | C224 + TMQ230 | 846 | 2170 | 1.33 | 13.0 / 6.5 | 92 lb. + 96 lb. | 14.07 |
| | 7-1/2 | C225 + TMQ232 | 1315 | 2275 | 1.22 | 19.4 / 9.7 | 103 lb. + 99 lb. | 16.34 |
| | 1/4 | G547 + TMQ213 | 5 | 700 | 3.48 | 1.3 / 0.65 | 14 lb. + 19 lb. | 7.88 |
| | 1/2 | G507 + TMQ213 | 112 | 700 | 1.74 | 2.2 / 1.1 | 17 lb. + 19 lb. | 8.83 |
| 233 | 3/4 | G522 + TMQ213 | 168 | 700 | 1.16 | 2.8 / 1.4 | 21 lb. + 19 lb. | 9.13 |
| | 1 | G527 + TMQ215 | 238 | 860 | 1.24 | 3.6 / 1.8 | 27 lb. + 24 lb. | 10.26 |
| 7-1/2:1 | 1-1/2 | G541 + TMQ218 | 363 | 790 | 1.11 | 4.8 / 2.4 | 29 lb. + 26 lb. | 10.26 |
| Ratio | 2 | C222 + TMQ220 | 489 | 1035 | 1.19 | 5.8 / 2.9 | 39 lb. + 33 lb. | 11.76 |
| | 3 | C223 + TMQ224 | 748 | 1625 | 1.16 | 8.0 / 4.0 | 76 lb. + 54 lb. | 13.07 |
| | 5 | C224 + TMQ230 | 1257 | 2170 | 1.21 | 13.0 / 6.5 | 92 lb. + 96 lb. | 14.07 |
| | 1/4 | G547 + TMQ213 | 78 | 700 | 2.93 | 1.3 / 0.65 | 14 lb. + 19 lb. | 7.88 |
| | 1/2 | G507 = TMQ213 | 156 | 700 | 1.47 | 2.2 / 1.1 | 17 lb. + 19 lb. | 8.83 |
| 175 | 3/4 | G522 + TMQ215 | 230 | 860 | 1.36 | 2.8 / 1.4 | 21 lb. + 24 lb. | 9.13 |
| | 1 | G527 + TMQ215 | 307 | 860 | 1.02 | 3.6 / 1.8 | 27 lb. + 24 lb. | 10.26 |
| 10:1 | 1-1/2 | G541 + TMQ220 | 490 | 1065 | 1.39 | 4.8 / 2.4 | 29 lb. + 33 lb. | 10.26 |
| Ratio | 2 | C222 + TMQ220 | 653 | 1065 | 1.05 | 5.8 / 2.9 | 39 lb. + 33 lb. | 11.76 |
| | 3 | C223 + TMQ224 | 984 | 1770 | 1.03 | 8.0 / 4.0 | 76 lb. + 54 lb. | 13.07 |
| | 5 | C224 + TMQ 230 | 1653 | 2170 | 1.09 | 13.0 / 6.5 | 92 lb. + 96 lb. | 14.07 |
| | 1/4 | G547 + TMQ213 | 111 | 700 | 2.20 | 1.3 / 0.65 | 14 lb. + 19 lb. | 7.88 |
| | 1/2 | G507 = TMQ213 | 222 | 700 | 1.10 | 2.2 / 1.1 | 17 lb. + 19 lb. | 8.63 |
| 117 | 3/4 | G522 + TMQ215 | 324 | 860 | 1.03 | 2.8 / 1.4 | 21 lb. + 24 lb. | 9.13 |
| | 1 | G527 + TMQ218 | 461 | 790 | 1.03 | 3.6 / 1.8 | 27 lb. + 26 lb. | 10.26 |
| 15:1 | 1-1/2 | G541 + TMQ220 | 709 | 1125 | 1.04 | 4.8 / 2.4 | 29 lb. + 33 lb. | 10.26 |
| Ratio | 2 | C222 + TMQ224 | 951 | 1770 | 1.15 | 5.8 / 2.9 | 39 lb. + 54 lb. | 11.76 |
| | 3 | C223 + TMQ230 | 1445 | 2170 | 1.40 | 8.0 / 4.0 | 76 lb. + 96 lb. | 13.57 |
| | 5 | C224 + TMQ 232 | 2417 | 2275 | 1.06 | 13.0 / 6.5 | 92 lb. + 99 lb. | 14.57 |
| | 1/4 | G547 + TMQ213 | 142 | 700 | 1.75 | 1.3 / 0.65 | 14 lb. + 19 lb. | 7.88 |
| | 1/2 | G507 = TMQ215 | 273 | 860 | 1.28 | 2.2 / 1.1 | 17 lb. + 24 lb. | 8.63 |
| 88 | 3/4 | G522 + TMQ218 | 443 | 860 | 1.09 | 2.8 / 1.4 | 21 lb. + 26 lb. | 9.13 |
| | 1 | G527 + TMQ220 | 608 | 1175 | 1.24 | 3.6 / 1.8 | 27 lb. + 33 lb. | 10.26 |
| 20:1 | 1-1/2 | G541 + TMQ224 | 920 | 1770 | 1.22 | 4.8 / 2.4 | 29 lb. + 54 lb. | 10.26 |
| Ratio | 2 | C222 + TMQ226 | 1246 | 1625 | 1.19 | 5.8 / 2.9 | 39 lb. + 69 lb. | 11.76 |
| | 3 | C223 + TMQ230 | 1871 | 2170 | 1.08 | 8.0 / 4.0 | 76 lb. + 96 lb. | 13.57 |

Output torque is measured in inch-pounds. Overhung load is measured in pounds.

See page 154 for "AG" dimension on drawing.

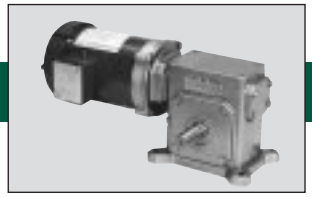

# Style TMQ

## AC Gearmotor

### Three Phase • Totally Enclosed
### 208/230 - 460 VAC - 60 HZ
### 1750 RPM Input Speed

| Output RPM | Motor HP | Model Number Motor + Reducer | Output TQ (IN. LBS.) | OHL (LBS.) | Service Factor | F.L. AMPS 230V/460V | Apprx. Weight Motor + Reducer | AG Dim. |
|---|---|---|---|---|---|---|---|---|
| 70 | 1/4 | G547 + TMQ213 | 167 | 700 | 1.50 | 1.2 / 0.65 | 14 lb. + 19 lb. | 7.88 |
| | 1/2 | G507 + TMQ215 | 324 | 860 | 1.09 | 2.2 / 1.1 | 17 lb. + 24 lb. | 8.63 |
| | 3/4 | G522 + TMQ220 | 557 | 1210 | 1.34 | 2.8 / 1.4 | 21 lb. + 33 lb. | 9.13 |
| | 1 | G527 + TMQ220 | 743 | 1210 | 1.01 | 3.6 / 1.8 | 27 lb. + 33 lb. | 10.26 |
| 25:1 | 1-1/2 | G541 + TMQ224 | 1117 | 1770 | 1.01 | 4.8 / 2.4 | 29 lb. + 54 lb. | 10.26 |
| Ratio | 2 | C222 + TMQ230 | 1517 | 2170 | 1.38 | 5.8 / 2.9 | 39 lb. + 96 lb. | 11.76 |
| | 3 | C223 + TMQ232 | 2302 | 2275 | 1.16 | 8.0 / 4.0 | 76 lb. + 99 lb. | 13.57 |
| 58 | 1/4 | G547 + TMQ213 | 191 | 700 | 1.31 | 1.2 / 0.65 | 14 lb. + 19 lb. | 7.88 |
| | 1/2 | G507 + TMQ218 | 408 | 860 | 1.19 | 2.2 / 1.1 | 17 lb. + 26 lb. | 8.63 |
| | 3/4 | G522 + TMQ220 | 638 | 1255 | 1.19 | 2.8 / 1.4 | 21 lb. + 33 lb. | 9.13 |
| | 1 | G527 + TMQ224 | 859 | 1770 | 1.32 | 3.6 / 1.8 | 27 lb. + 54 lb. | 10.26 |
| 30:1 | 1-1/2 | G541 + TMQ226 | 1335 | 1625 | 1.10 | 4.8 / 2.4 | 29 lb. + 69 lb. | 10.26 |
| Ratio | 2 | C222 + TMQ230 | 1765 | 2170 | 1.19 | 5.8 / 2.9 | 39 lb. + 96 lb. | 11.76 |
| | 3 | C223 + TMQ232 | 2649 | 2275 | 1.00 | 8.0 / 4.0 | 76 lb. + 99 lb. | 13.57 |
| 44 | 1/4 | G547 + TMQ213 | 237 | 700 | 1.04 | 1.2 / 0.65 | 14 lb. + 19 lb. | 7.88 |
| | 1/2 | G507 + TMQ220 | 523 | 1315 | 1.42 | 2.2 / 1.1 | 17 lb. + 33 lb. | 8.63 |
| | 3/4 | G522 + TMQ224 | 808 | 1770 | 1.39 | 2.8 / 1.4 | 21 lb. + 54 lb. | 9.13 |
| 40:1 | 1 | G527 + TMQ224 | 1078 | 1770 | 1.04 | 3.6 / 1.8 | 27 lb. + 54 lb. | 10.26 |
| Ratio | 1-1/2 | G541 + TMQ230 | 1663 | 2170 | 1.21 | 4.8 / 2.4 | 29 lb. + 96 lb. | 10.26 |
| | 2 | C222 + TMQ232 | 2250 | 2275 | 1.17 | 5.8 / 2.9 | 39 lb. + 99 lb. | 11.76 |
| | 1/4 | G547 + TMQ215 | 256 | 860 | 1.32 | 1.2 / 0.65 | 14 lb. + 24 lb. | 7.88 |
| 35 | 1/2 | G507 + TMQ220 | 638 | 1385 | 1.13 | 2.2 / 1.1 | 17 lb. + 33 lb. | 8.63 |
| 50:1 | 3/4 | G522 + TMQ224 | 960 | 1770 | 1.13 | 2.8 / 1.4 | 21 lb. + 54 lb. | 9.13 |
| Ratio | 1 | G527 + TMQ226 | 1325 | 1625 | 1.08 | 3.6 / 1.8 | 27 lb. + 69 lb. | 10.26 |
| | 1-1/2 | G541 + TMQ230 | 1980 | 2170 | 1.02 | 4.8 / 2.4 | 29 lb. + 96 lb. | 10.26 |
| | 1/4 | G547 + TMQ215 | 285 | 860 | 1.13 | 1.2 / 0.65 | 14 lb. + 24 lb. | 7.88 |
| 29 | 1/2 | G507 + TMQ224 | 747 | 1770 | 1.35 | 2.2 / 1.1 | 17 lb. + 54 lb. | 8.63 |
| 60:1 | 3/4 | G522 + TMQ226 | 1143 | 1625 | 1.18 | 2.8 / 1.4 | 21 lb. + 69 lb. | 9.13 |
| Ratio | 1 | G527 + TMQ230 | 1505 | 2170 | 1.28 | 3.6 / 1.8 | 27 lb. + 96 lb. | 10.26 |
| | 1-1/2 | G541 + TMQ232 | 2324 | 2275 | 1.05 | 4.8 / 2.4 | 29 lb. + 99 lb. | 10.26 |
| 22 | 1/4 | G547 + TMQ220 | 450 | 1495 | 1.22 | 1.2 / 0.65 | 14 lb. + 33 lb. | 7.88 |
| 80:1 | 1/2 | G507 + TMQ226 | 946 | 1625 | 1.15 | 2.2 / 1.1 | 17 lb. + 69 lb. | 8.63 |
| Ratio | 3/4 | G522 + TMQ230 | 1412 | 2170 | 1.19 | 2.8 / 1.4 | 21 lb. + 96 lb. | 9.13 |
| | 1 | G527 + TMQ232 | 1943 | 2275 | 1.03 | 3.6 / 1.8 | 27 lb. + 99 lb. | 10.26 |
| 18 | 1/4 | G547 + TMQ224 | 528 | 1770 | 1.23 | 1.2 / 0.65 | 14 lb. + 33 lb. | 7.88 |
| 100:1 Ratio | 1/2 | G507 + TMQ230 | 1096 | 2170 | 1.21 | 2.2 / 1.1 | 17 lb. + 69 lb. | 8.63 |

Output torque is measured in inch-pounds. Overhung load is measured in pounds.

See page 154 for “AG” dimension on drawing.

# Style BMQ

## BISSC Washdown Duty AC Gearmotor

### Three Phase • Totally Enclosed
### 208/203-460 VAC - 60 HZ
### 1750 RPM Input Speed

| Output RPM | Motor HP | Model Number Motor + Reducer | Output TQ (IN. LBS.) | OHL (LBS.) | Service Factor | F.L. AMPS 115V/230V | Apprx. Weight Motor + Reducer | AG Dim. |
|---|---|---|---|---|---|---|---|---|
| | 1/4 | N640 + BMQ213 | 41 | 700 | 4.23 | 1.1 / 0.6 | 19 lb. + 17 lb. | 7.50 |
| | 1/2 | N642 + BMQ213 | 81 | 700 | 2.12 | 1.8 / 0.9 | 24 lb. + 17 lb. | 8.00 |
| 350 | 3/4 | N644 + BMQ213 | 122 | 700 | 1.41 | 2.4 / 1.2 | 30 lb. + 17 lb. | 8.50 |
| | 1 | N646 + BMQ213 | 163 | 700 | 1.06 | 3.2 / 1.6 | 34 lb. + 17 lb. | 9.50 |
| 5:1 | 1 1/2 | N649 + BMQ215 | 248 | 860 | 1.03 | 4.2 / 2.1 | 46 lb. + 22 lb. | 11.00 |
| Ratio | 2 | N653 + BMQ220 | 333 | 1000 | 1.26 | 6.2 / 3.1 | 48 lb. + 30 lb. | 12.62 |
| | 3 | N656 + BMQ224 | 504 | 1770 | 1.30 | 8.8 / 4.4 | 70 lb. + 46 lb. | 11.38 |
| | 5 | N658 + BMQ230 | 846 | 2170 | 1.33 | 13.4 / 6.7 | 73 lb. + 80 lb. | 11.38 |
| | 7 1/2 | N660 + BMQ232 | 1315 | 2275 | 1.22 | 19.0 / 9.5 | 139 lb. + 83 lb. | 15.00 |
| | 1/4 | N640 + BMQ213 | 56 | 700 | 3.48 | 1.1 / 0.6 | 19 lb. + 17 lb. | 7.50 |
| | 1/2 | N642 + BMQ213 | 112 | 700 | 1.74 | 1.8 / 0.9 | 24 lb. + 17 lb. | 8.00 |
| 233 | 3/4 | N644 + BMQ213 | 168 | 700 | 1.16 | 2.4 / 1.2 | 30 lb. + 17 lb. | 8.50 |
| | 1 | N646 + BMQ215 | 238 | 860 | 1.24 | 3.2 / 1.6 | 34 lb. + 17 lb. | 9.50 |
| 7-1/2:1 | 1 1/2 | N649 + BMQ218 | 363 | 790 | 1.11 | 4.2 / 2.1 | 46 lb. + 22 lb. | 11.00 |
| Ratio | 2 | N653 + BMQ220 | 489 | 1035 | 1.19 | 6.2 / 3.1 | 48 lb. + 30 lb. | 12.62 |
| | 3 | N656 + BMQ224 | 748 | 1625 | 1.16 | 8.8 / 4.4 | 70 lb. + 46 lb. | 11.38 |
| | 5 | N658 + BMQ230 | 1257 | 2170 | 1.21 | 13.4 / 6.7 | 73 lb. + 80 lb. | 11.38 |
| | 1/4 | N640 + BMQ213 | 78 | 700 | 2.93 | 1.1 / 0.6 | 19 lb. + 17 lb. | 7.50 |
| | 1/2 | N642 + BMQ213 | 156 | 700 | 1.47 | 1.8 / 0.9 | 24 lb. + 17 lb. | 8.00 |
| 175 | 3/4 | N644 + BMQ215 | 230 | 860 | 1.36 | 2.4 / 1.2 | 30 lb. + 22 lb. | 8.50 |
| | 1 | N646 + BMQ215 | 307 | 860 | 1.02 | 3.2 / 1.6 | 34 lb. + 22 lb. | 9.50 |
| 10:1 | 1 1/2 | N649 + BMQ220 | 490 | 1065 | 1.39 | 4.2 / 2.1 | 46 lb. + 30 lb. | 11.00 |
| Ratio | 2 | N653 + BMQ220 | 653 | 1065 | 1.05 | 6.2 / 3.1 | 48 lb. + 30 lb. | 12.62 |
| | 3 | N656 + BMQ224 | 984 | 1770 | 1.03 | 8.8 / 4.4 | 70 lb. + 46 lb. | 11.38 |
| | 5 | N658 + BMQ230 | 1653 | 2170 | 1.09 | 13.4 / 6.7 | 73 lb. + 80 lb. | 11.38 |
| | 1/4 | N640 + BMQ213 | 111 | 700 | 2.20 | 1.1 / 0.6 | 19 lb. + 17 lb. | 7.50 |
| | 1/2 | N642 + BMQ213 | 222 | 700 | 1.10 | 1.8 / 0.9 | 24 lb. + 17 lb. | 8.00 |
| 117 | 3/4 | N644 + BMQ215 | 324 | 860 | 1.03 | 2.4 / 1.2 | 30 lb. + 22 lb. | 8.50 |
| | 1 | N646 + BMQ218 | 461 | 790 | 1.03 | 3.2 / 1.6 | 34 lb. + 24 lb. | 9.50 |
| 15:1 | 1 1/2 | N649 + BMQ220 | 709 | 1125 | 1.04 | 4.2 / 2.1 | 46 lb. + 30 lb. | 11.00 |
| Ratio | 2 | N653 + BMQ224 | 951 | 1770 | 1.15 | 6.2 / 3.1 | 48 lb. + 46 lb. | 12.62 |
| | 3 | N656 + BMQ230 | 1445 | 2170 | 1.40 | 8.8 / 4.4 | 70 lb. + 80 lb. | 11.38 |
| | 5 | N658 + BMQ232 | 2417 | 2275 | 1.06 | 13.4 / 6.7 | 73 lb. + 83 lb. | 11.38 |
| | 1/4 | N640 + BMQ213 | 142 | 700 | 1.75 | 1.1 / 0.6 | 19 lb. + 17 lb. | 7.50 |
| 88 | 1/2 | N642 + BMQ215 | 273 | 860 | 1.28 | 1.8 / 0.9 | 24 lb. + 22 lb. | 8.00 |
| | 3/4 | N644 + BMQ218 | 443 | 790 | 1.09 | 2.4 / 1.2 | 30 lb. + 24 lb. | 8.50 |
| 20:1 | 1 | N646 + BMQ220 | 608 | 1175 | 1.24 | 3.2 / 1.6 | 34 lb. + 30 lb. | 9.50 |
| Ratio | 1 1/2 | N649 + BMQ224 | 920 | 1770 | 1.22 | 4.2 / 2.1 | 46 lb. + 46 lb. | 11.00 |
| | 2 | N653 + BMQ226 | 1246 | 1625 | 1.19 | 6.2 / 3.1 | 48 lb. + 59 lb. | 12.62 |
| | 3 | N656 + BMQ230 | 1871 | 2170 | 1.08 | 8.8 / 4.4 | 70 lb. + 80 lb. | 11.38 |

Output torque is measured in inch-pounds. Overhung load is measured in pounds.

See page 154 for "AG" dimension on drawing.

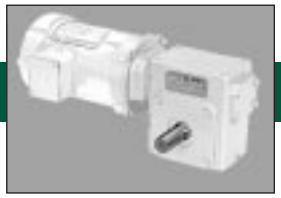

# Style BMQ

## BISSC Washdown Duty AC Gearmotor

**Three Phase • Totally Enclosed**
**208/203-460 VAC - 60 HZ**
**1750 RPM Input Speed**

| Output RPM | Motor HP | Model Number Motor + Reducer | Output TQ (IN. LBS.) | OHL (LBS.) | Service Factor | F.L. AMPS 230V | Apprx. Weight Motor + Reducer | AG Dim. |
|---|---|---|---|---|---|---|---|---|
| 70 | 1/4 | N640 + BMQ213 | 167 | 700 | 1.50 | 1.1 / 0.6 | 19 lb. + 17 lb. | 7.50 |
| | 1/2 | N642 + BMQ215 | 324 | 860 | 1.09 | 1.8 / 0.9 | 24 lb. + 22 lb. | 8.00 |
| | 3/4 | N644 + BMQ220 | 557 | 1210 | 1.34 | 2.4 / 1.2 | 30 lb. + 30 lb. | 8.50 |
| 25:1 | 1 | N646 + BMQ220 | 743 | 1210 | 1.01 | 3.2 / 1.6 | 34 lb. + 30 lb. | 9.50 |
| Ratio | 1 1/2 | N649 + BMQ224 | 1117 | 1770 | 1.01 | 4.2 / 2.1 | 46 lb. + 46 lb. | 11.00 |
| | 2 | N653 + BMQ230 | 1517 | 2170 | 1.38 | 6.2 / 3.1 | 48 lb. + 80 lb. | 12.62 |
| | 3 | N656 + BMQ232 | 2302 | 2275 | 1.16 | 8.8 / 4.4 | 70 lb. + 83 lb. | 11.38 |
| 58 | 1/4 | N640 + BMQ213 | 191 | 700 | 1.31 | 1.1 / 0.6 | 19 lb. + 17 lb. | 7.50 |
| | 1/2 | N642 + BMQ218 | 408 | 790 | 1.19 | 1.8 / 0.9 | 24 lb. + 24 lb. | 8.00 |
| | 3/4 | N644 + BMQ220 | 638 | 1255 | 1.19 | 2.4 / 1.2 | 30 lb. + 30 lb. | 8.50 |
| 30:1 | 1 | N646 + BMQ224 | 859 | 1770 | 1.32 | 3.2 / 1.6 | 34 lb. + 46 lb. | 9.50 |
| Ratio | 1 1/2 | N649 + BMQ226 | 1335 | 1625 | 1.10 | 4.2 / 2.1 | 46 lb. + 59 lb. | 11.00 |
| | 2 | N653 + BMQ230 | 1765 | 2170 | 1.19 | 6.2 / 3.1 | 48 lb. + 80 lb. | 12.62 |
| | 3 | N656 + BMQ232 | 2649 | 2275 | 1.00 | 8.8 / 4.4 | 70 lb. + 83 lb. | 11.38 |
| 44 | 1/4 | N640 + BMQ213 | 237 | 700 | 1.04 | 1.1 / 0.6 | 19 lb. + 17 lb. | 7.50 |
| | 1/2 | N642 + BMQ220 | 523 | 1385 | 1.42 | 1.8 / 0.9 | 24 lb. + 30 lb. | 8.00 |
| | 3/4 | N644 + BMQ224 | 808 | 1770 | 1.39 | 2.4 / 1.2 | 30 lb. + 30 lb. | 8.50 |
| 40:1 | 1 | N646 + BMQ224 | 1078 | 1770 | 1.04 | 3.2 / 1.6 | 34 lb. + 30 lb. | 9.50 |
| Ratio | 1 1/2 | N649 + BMQ230 | 1663 | 2170 | 1.21 | 4.2 / 2.1 | 46 lb. + 80 lb. | 11.00 |
| | 2 | N653 + BMQ232 | 2250 | 2275 | 1.17 | 6.2 / 3.1 | 48 lb. + 83 lb. | 12.62 |
| | 1/4 | N640 + BMQ215 | 256 | 700 | 1.32 | 1.1 / 0.6 | 19 lb. + 22 lb. | 7.50 |
| 35 | 1/2 | N642 + BMQ220 | 638 | 1385 | 1.13 | 1.8 / 0.9 | 24 lb. + 30 lb. | 8.00 |
| 50:1 | 3/4 | N644 + BMQ224 | 960 | 1770 | 1.13 | 2.4 / 1.2 | 30 lb. + 30 lb. | 8.50 |
| Ratio | 1 | N646 + BMQ226 | 1325 | 1770 | 1.08 | 3.2 / 1.6 | 34 lb. + 59 lb. | 9.50 |
| | 1 1/2 | N649 + BMQ230 | 1980 | 2170 | 1.02 | 4.2 / 2.1 | 46 lb. + 80 lb. | 11.00 |
| | 1/4 | N640 + BMQ215 | 285 | 860 | 1.13 | 1.1 / 0.6 | 19 lb. + 22 lb. | 7.50 |
| 29 | 1/2 | N642 + BMQ224 | 747 | 1770 | 1.35 | 1.8 / 0.9 | 24 lb. + 30 lb. | 8.00 |
| 60:1 | 3/4 | N644 + BMQ226 | 1143 | 1625 | 1.18 | 2.4 / 1.2 | 30 lb. + 59 lb. | 8.50 |
| Ratio | 1 | N646 + BMQ230 | 1505 | 2170 | 1.28 | 3.2 / 1.6 | 34 lb. + 80 lb. | 9.50 |
| | 1 1/2 | N649 + BMQ232 | 2324 | 2275 | 1.05 | 4.2 / 2.1 | 46 lb. + 83 lb. | 11.00 |
| 22 | 1/4 | N640 + BMQ220 | 450 | 1495 | 1.22 | 1.1 / 0.6 | 19 lb. + 30 lb. | 7.50 |
| 80:1 | 1/2 | N642 + BMQ226 | 946 | 1625 | 1.15 | 1.8 / 0.9 | 24 lb. + 59 lb. | 8.00 |
| Ratio | 3/4 | N644 + BMQ230 | 1412 | 2170 | 1.19 | 2.4 / 1.2 | 30 lb. + 80 lb. | 8.50 |
| | 1 | N646 + BMQ232 | 1983 | 2275 | 1.03 | 3.2 / 1.6 | 34 lb. + 83 lb. | 9.50 |
| 18 | 1/4 | N640 + BMQ224 | 528 | 1770 | 1.23 | 1.1 / 0.6 | 19 lb. + 30 lb. | 7.50 |
| 100:1 Ratio | 1/2 | N642 + BMQ220 | 1096 | 2170 | 1.21 | 1.8 / 0.9 | 17 lb. + 80 lb. | 8.00 |

Output torque is measured in inch-pounds. Overhung load is measured in pounds.

See page 154 for “AG” dimension on drawing.

# Style TMQ

## BISSC Washdown Duty AC Gearmotor

### Three Phase • Totally Enclosed
### 208/203-460 VAC - 60 HZ
### 1750 RPM Input Speed

| Output RPM | Motor HP | Model Number Motor + Reducer | Output TQ (IN. LBS.) | OHL (LBS.) | Service Factor | F.L. AMPS 115V/230V | Apprx. Weight Motor + Reducer | AG Dim. |
|---|---|---|---|---|---|---|---|---|
| | 1/4 | N640 + TMQ213 | 41 | 700 | 4.23 | 1.1 / 0.6 | 19 lb. + 19 lb. | 7.50 |
| | 1/2 | N642 + TMQ213 | 81 | 700 | 2.12 | 1.8 / 0.9 | 24 lb. + 19 lb. | 8.00 |
| 350 | 3/4 | N644 + TMQ213 | 122 | 700 | 1.41 | 2.4 / 1.2 | 30 lb. + 19 lb. | 8.50 |
| | 1 | N646 + TMQ213 | 163 | 700 | 1.06 | 3.2 / 1.6 | 34 lb. + 19 lb. | 9.50 |
| 5:1 | 1 1/2 | N649 + TMQ215 | 248 | 860 | 1.03 | 4.2 / 2.1 | 46 lb. + 24 lb. | 11.00 |
| Ratio | 2 | N653 + TMQ220 | 333 | 1000 | 1.26 | 6.2 / 3.1 | 48 lb. + 33 lb. | 12.62 |
| | 3 | N656 + TMQ224 | 504 | 1770 | 1.30 | 8.8 / 4.4 | 70 lb. + 54 lb. | 11.38 |
| | 5 | N658 + TMQ230 | 846 | 2170 | 1.33 | 13.4 / 6.7 | 73 lb. + 96 lb. | 11.38 |
| | 7 1/2 | N660 + TMQ232 | 1315 | 2275 | 1.22 | 19.0 / 9.5 | 139 lb. + 99 lb. | 15.00 |
| | 1/4 | N640 + TMQ213 | 56 | 700 | 3.48 | 1.1 / 0.6 | 19 lb. + 19 lb. | 7.50 |
| | 1/2 | N642 + TMQ213 | 112 | 700 | 1.74 | 1.8 / 0.9 | 24 lb. + 19 lb. | 8.00 |
| 233 | 3/4 | N644 + TMQ213 | 168 | 700 | 1.16 | 2.4 / 1.2 | 30 lb. + 19 lb. | 8.50 |
| | 1 | N646 + TMQ215 | 238 | 860 | 1.24 | 3.2 / 1.6 | 34 lb. + 19 lb. | 9.50 |
| 7-1/2:1 | 1 1/2 | N649 + TMQ218 | 363 | 790 | 1.11 | 4.2 / 2.1 | 46 lb. + 24 lb. | 11.00 |
| Ratio | 2 | N653 + TMQ220 | 489 | 1035 | 1.19 | 6.2 / 3.1 | 48 lb. + 33 lb. | 12.62 |
| | 3 | N656 + TMQ224 | 748 | 1625 | 1.16 | 8.8 / 4.4 | 70 lb. + 69 lb. | 11.38 |
| | 5 | N658 + TMQ230 | 1257 | 2170 | 1.21 | 13.4 / 6.7 | 73 lb. + 96 lb. | 11.38 |
| | 1/4 | N640 + TMQ213 | 78 | 700 | 2.93 | 1.1 / 0.6 | 19 lb. + 19 lb. | 7.50 |
| | 1/2 | N642 + TMQ213 | 156 | 700 | 1.47 | 1.8 / 0.9 | 24 lb. + 19 lb. | 8.00 |
| 175 | 3/4 | N644 + TMQ215 | 230 | 860 | 1.36 | 2.4 / 1.2 | 30 lb. + 24 lb. | 8.50 |
| | 1 | N646 + TMQ215 | 307 | 860 | 1.02 | 3.2 / 1.6 | 34 lb. + 24 lb. | 9.50 |
| 10:1 | 1 1/2 | N649 + TMQ220 | 490 | 1065 | 1.39 | 4.2 / 2.1 | 46 lb. + 33 lb. | 11.00 |
| Ratio | 2 | N653 + TMQ220 | 653 | 1065 | 1.05 | 6.2 / 3.1 | 48 lb. + 33 lb. | 12.62 |
| | 3 | N656 + TMQ224 | 984 | 1770 | 1.03 | 8.8 / 4.4 | 70 lb. + 54 lb. | 11.38 |
| | 5 | N658 + TMQ230 | 1653 | 2170 | 1.09 | 13.4 / 6.7 | 73 lb. + 96 lb. | 11.38 |
| | 1/4 | N640 + TMQ213 | 111 | 700 | 2.20 | 1.1 / 0.6 | 19 lb. + 19 lb. | 7.50 |
| | 1/2 | N642 + TMQ213 | 222 | 700 | 1.10 | 1.8 / 0.9 | 24 lb. + 19 lb. | 8.00 |
| 117 | 3/4 | N644 + TMQ215 | 324 | 860 | 1.03 | 2.4 / 1.2 | 30 lb. + 24 lb. | 8.50 |
| | 1 | N646 + TMQ218 | 461 | 790 | 1.03 | 3.2 / 1.6 | 34 lb. + 26 lb. | 9.50 |
| 15:1 | 1 1/2 | N649 + TMQ220 | 709 | 1125 | 1.04 | 4.2 / 2.1 | 46 lb. + 33 lb. | 11.00 |
| Ratio | 2 | N653 + TMQ224 | 951 | 1770 | 1.15 | 6.2 / 3.1 | 48 lb. + 54 lb. | 12.62 |
| | 3 | N656 + TMQ230 | 1445 | 2170 | 1.40 | 8.8 / 4.4 | 70 lb. + 96 lb. | 11.38 |
| | 5 | N658 + TMQ232 | 2417 | 2275 | 1.06 | 13.4 / 6.7 | 73 lb. + 99 lb. | 11.38 |
| | 1/4 | N640 + TMQ213 | 142 | 700 | 1.75 | 1.1 / 0.6 | 19 lb. + 19 lb. | 7.50 |
| | 1/2 | N642 + TMQ215 | 273 | 860 | 1.28 | 1.8 / 0.9 | 24 lb. + 24 lb. | 8.00 |
| 88 | 3/4 | N644 + TMQ218 | 443 | 790 | 1.09 | 2.4 / 1.2 | 30 lb. + 26 lb. | 8.50 |
| 20:1 | 1 | N646 + TMQ220 | 608 | 1175 | 1.24 | 3.2 / 1.6 | 34 lb. + 33 lb. | 9.50 |
| Ratio | 1 1/2 | N649 + TMQ224 | 920 | 1770 | 1.22 | 4.2 / 2.1 | 46 lb. + 54 lb. | 11.00 |
| | 2 | N653 + TMQ226 | 1246 | 1625 | 1.19 | 6.2 / 3.1 | 48 lb. + 69 lb. | 12.62 |
| | 3 | N656 + TMQ230 | 1871 | 2170 | 1.08 | 8.8 / 4.4 | 70 lb. + 96 lb. | 11.38 |

Output torque is measured in inch-pounds. Overhung load is measured in pounds.

See page 154 for "AG" dimension on drawing.

*Style TMQ*

# BISSC Washdown Duty AC Gearmotor

**Three Phase • Totally Enclosed**
**208/203-460 VAC - 60 HZ**
**1750 RPM Input Speed**

| Output RPM | Motor HP | Model Number Motor + Reducer | Output TQ (IN. LBS.) | OHL (LBS.) | Service Factor | F.L. AMPS 230V | Apprx. Weight Motor + Reducer | AG Dim. |
|---|---|---|---|---|---|---|---|---|
| 70 | 1/4 | N640 + TMQ213 | 167 | 700 | 1.50 | 1.1 / 0.6 | 19 lb. + 19 lb. | 7.50 |
| | 1/2 | N642 + TMQ215 | 324 | 860 | 1.09 | 1.8 / 0.9 | 24 lb. + 24 lb. | 8.00 |
| | 3/4 | N644 + TMQ220 | 557 | 1210 | 1.34 | 2.4 / 1.2 | 30 lb. + 33 lb. | 8.50 |
| 25:1 | 1 | N646 + TMQ220 | 743 | 1210 | 1.01 | 3.2 / 1.6 | 34 lb. + 33 lb. | 9.50 |
| Ratio | 1 1/2 | N649 + TMQ224 | 1117 | 1770 | 1.01 | 4.2 / 2.1 | 46 lb. + 54 lb. | 11.00 |
| | 2 | N653 + TMQ230 | 1517 | 2170 | 1.38 | 6.2 / 3.1 | 48 lb. + 96 lb. | 12.62 |
| | 3 | N656 + TMQ232 | 2302 | 2275 | 1.16 | 8.8 / 4.4 | 70 lb. + 99 lb. | 11.38 |
| 58 | 1/4 | N640 + TMQ213 | 191 | 700 | 1.31 | 1.1 / 0.6 | 19 lb. + 19 lb. | 7.50 |
| | 1/2 | N642 + TMQ218 | 408 | 790 | 1.19 | 1.8 / 0.9 | 24 lb. + 26 lb. | 8.00 |
| | 3/4 | N644 + TMQ220 | 638 | 1255 | 1.19 | 2.4 / 1.2 | 30 lb. + 33 lb. | 8.50 |
| 30:1 | 1 | N646 + TMQ224 | 859 | 1770 | 1.32 | 3.2 / 1.6 | 34 lb. + 54 lb. | 9.50 |
| Ratio | 1 1/2 | N649 + TMQ226 | 1335 | 1625 | 1.10 | 4.2 / 2.1 | 46 lb. + 69 lb. | 11.00 |
| | 2 | N653 + TMQ230 | 1765 | 2170 | 1.19 | 6.2 / 3.1 | 48 lb. + 96 lb. | 12.62 |
| | 3 | N656 + TMQ232 | 2649 | 2275 | 1.00 | 8.8 / 4.4 | 70 lb. + 99 lb. | 11.38 |
| 44 | 1/4 | N640 + TMQ213 | 237 | 700 | 1.04 | 1.1 / 0.6 | 19 lb. + 19 lb. | 7.50 |
| | 1/2 | N642 + TMQ220 | 523 | 1385 | 1.42 | 1.8 / 0.9 | 24 lb. + 33 lb. | 8.00 |
| | 3/4 | N644 + TMQ224 | 808 | 1770 | 1.39 | 2.4 / 1.2 | 30 lb. + 54 lb. | 8.50 |
| 40:1 | 1 | N646 + TMQ224 | 1078 | 1770 | 1.04 | 3.2 / 1.6 | 34 lb. + 54 lb. | 9.50 |
| Ratio | 1 1/2 | N649 + TMQ230 | 1663 | 2170 | 1.21 | 4.2 / 2.1 | 46 lb. + 96 lb. | 11.00 |
| | 2 | N653 + TMQ232 | 2250 | 2275 | 1.17 | 6.2 / 3.1 | 48 lb. + 99 lb. | 12.62 |
| 35 | 1/4 | N640 + TMQ215 | 256 | 700 | 1.32 | 1.1 / 0.6 | 19 lb. + 24 lb. | 7.50 |
| | 1/2 | N642 + TMQ220 | 638 | 1385 | 1.13 | 1.8 / 0.9 | 24 lb. + 33 lb. | 8.00 |
| 50:1 | 3/4 | N644 + TMQ224 | 960 | 1770 | 1.13 | 2.4 / 1.2 | 30 lb. + 54 lb. | 8.50 |
| Ratio | 1 | N646 + TMQ226 | 1325 | 1770 | 1.08 | 3.2 / 1.6 | 34 lb. + 69 lb. | 9.50 |
| | 1 1/2 | N649 + TMQ230 | 1980 | 2170 | 1.02 | 4.2 / 2.1 | 46 lb. + 96 lb. | 11.00 |
| 29 | 1/4 | N640 + TMQ215 | 285 | 860 | 1.13 | 1.1 / 0.6 | 19 lb. + 24 lb. | 7.50 |
| | 1/2 | N642 + TMQ224 | 747 | 1770 | 1.35 | 1.8 / 0.9 | 24 lb. + 54 lb. | 8.00 |
| 60:1 | 3/4 | N644 + TMQ226 | 1143 | 1625 | 1.18 | 2.4 / 1.2 | 30 lb. + 69 lb. | 8.50 |
| Ratio | 1 | N646 + TMQ230 | 1505 | 2170 | 1.28 | 3.2 / 1.6 | 34 lb. + 96 lb. | 9.50 |
| | 1 1/2 | N649 + TMQ232 | 2324 | 2275 | 1.05 | 4.2 / 2.1 | 46 lb. + 99 lb. | 11.00 |
| 22 | 1/4 | N640 + TMQ220 | 450 | 1495 | 1.22 | 1.1 / 0.6 | 19 lb. + 33 lb. | 7.50 |
| | 1/2 | N642 + TMQ226 | 946 | 1625 | 1.15 | 1.8 / 0.9 | 24 lb. + 54 lb. | 8.00 |
| 80:1 | 3/4 | N644 + TMQ230 | 1412 | 2170 | 1.19 | 2.4 / 1.2 | 30 lb. + 96 lb. | 8.50 |
| Ratio | 1 | N646 + TMQ232 | 1983 | 2275 | 1.03 | 3.2 / 1.6 | 34 lb. + 99 lb. | 9.50 |
| 18 | 1/4 | N640 + TMQ224 | 528 | 1770 | 1.23 | 1.1 / 0.6 | 19 lb. + 54 lb. | 7.50 |
| 100:1 Ratio | 1/2 | N642 + TMQ230 | 1076 | 2170 | 1.21 | 1.8 / 0.9 | 17 lb. + 96 lb. | 8.00 |

Output torque is measured in inch-pounds. Overhung load is measured in pounds.

See page 154 for “AG” dimension on drawing.

# Style BMQ

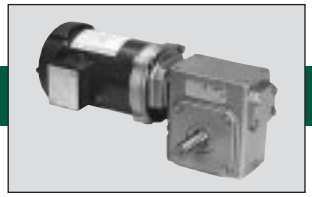

## AC Inverter Duty Gearmotor

### Three Phase • Totally Enclosed
### 230VAC-60Hz
### 1750 RPM Input Speed

| Output RPM | Motor HP | Model Number Motor + Reducer | Output TQ (IN. LBS.) | OHL (LBS.) | Service Factor | F.L. AMPS 230V | Apprx. Weight Motor + Reducer | AG Dim. |
|---|---|---|---|---|---|---|---|---|
| | 1/4 | Y500 + BMQ213 @ | 41 | 700 | 4.23 | 1.0 | 18 lb. + 17 lb. | 7.75 |
| | 1/2 | Y504 + BMQ213 @ | 81 | 700 | 2.12 | 1.8 | 20 lb. + 17 lb. | 8.50 |
| 350 | 3/4 | Y506 + BMQ213 # | 122 | 700 | 1.41 | 2.8 | 23 lb. + 17 lb. | 9.12 |
| | 1 | Y508 + BMQ213 # | 163 | 700 | 1.06 | 3.2 | 28 lb. + 17 lb. | 10.38 |
| 5:1 | 1-1/2 | Y522 + BMQ215 @ | 248 | 860 | 1.03 | 4.8 | 49 lb. + 22 lb. | 11.38 |
| Ratio | 2 | Y523 + BMQ220 # | 333 | 1000 | 1.26 | 5.8 | 50 lb. + 30 lb. | 12.75 |
| | 3 | Y530 + BMQ224 # | 504 | 1770 | 1.30 | 8.4 | 52 lb. + 46 lb. | 12.75 |
| | 5 | Y372 + BMQ230 # | 846 | 2170 | 1.33 | 13.4 | 88 lb. + 80 lb. | 14.06 |
| | 1/4 | Y500 + BMQ213 @ | 56 | 700 | 3.48 | 1.0 | 18 lb. + 17 lb. | 7.75 |
| | 1/2 | Y504 + BMQ213 @ | 112 | 700 | 1.74 | 1.8 | 20 lb. + 17 lb. | 8.50 |
| 233 | 3/4 | Y506 + BMQ213 # | 168 | 700 | 1.16 | 2.8 | 23 lb. + 17 lb. | 9.12 |
| | 1 | Y508 + BMQ215 # | 238 | 860 | 1.24 | 3.2 | 28 lb. + 22 lb. | 10.38 |
| 7-1/2:1 | 1-1/2 | Y522 + BMQ218 @ | 363 | 790 | 1.11 | 4.8 | 49 lb. + 24 lb. | 11.38 |
| Ratio | 2 | Y523 + BMQ220 # | 489 | 1035 | 1.19 | 5.8 | 50 lb. + 30 lb. | 12.75 |
| | 3 | Y530 + BMQ224 # | 748 | 1770 | 1.16 | 8.4 | 52 lb. + 46 lb. | 12.75 |
| | 5 | Y372 + BMQ230 # | 1257 | 2170 | 1.21 | 13.4 | 88 lb. + 80 lb. | 14.06 |
| | 1/4 | Y500 + BMQ213 @ | 78 | 700 | 2.93 | 1.0 | 18 lb. + 17 lb. | 7.75 |
| | 1/2 | Y504 + BMQ213 @ | 156 | 700 | 1.47 | 1.8 | 20 lb. + 17 lb. | 8.50 |
| 175 | 3/4 | Y506 + BMQ215 # | 230 | 860 | 1.36 | 2.8 | 23 lb. + 22 lb. | 9.12 |
| | 1 | Y508 + BMQ215 # | 307 | 860 | 1.02 | 3.2 | 28 lb. + 22 lb. | 10.38 |
| 10:1 | 1-1/2 | Y522 + BMQ220 @ | 490 | 1035 | 1.39 | 4.8 | 49 lb. + 30 lb. | 11.38 |
| Ratio | 2 | Y523 + BMQ220 # | 653 | 1035 | 1.05 | 5.8 | 50 lb. + 30 lb. | 12.75 |
| | 3 | Y530 + BMQ224 # | 984 | 1770 | 1.03 | 8.4 | 52 lb. + 46 lb. | 12.75 |
| | 5 | Y372 + BMQ230 # | 1653 | 2185 | 1.09 | 13.4 | 88 lb. + 80 lb. | 14.06 |
| | 1/4 | Y500 + BMQ213 @ | 111 | 700 | 2.20 | 1.0 | 18 lb. + 17 lb. | 7.75 |
| | 1/2 | Y504 + BMQ213 @ | 222 | 700 | 1.10 | 1.8 | 20 lb. + 17 lb. | 8.50 |
| 117 | 3/4 | Y506 + BMQ215 # | 324 | 700 | 1.03 | 2.8 | 23 lb. + 22 lb. | 9.12 |
| | 1 | Y508 + BMQ218 # | 461 | 700 | 1.03 | 3.2 | 28 lb. + 24 lb. | 10.38 |
| 15:1 | 1-1/2 | Y522 + BMQ220 @ | 709 | 1125 | 1.04 | 4.8 | 49 lb. + 30 lb. | 11.38 |
| Ratio | 2 | Y523 + BMQ224 # | 951 | 1770 | 1.15 | 5.8 | 50 lb. + 46 lb. | 12.75 |
| | 3 | Y530 + BMQ230 # | 1445 | 2170 | 1.40 | 8.4 | 52 lb. + 80 lb. | 12.75 |
| | 5 | Y372 + BMQ232 # | 2417 | 2275 | 1.06 | 13.4 | 88 lb. + 83 lb. | 14.06 |
| | 1/4 | Y500 + BMQ213 @ | 142 | 700 | 1.75 | 1.0 | 18 lb. + 17 lb. | 7.75 |
| | 1/2 | Y504 + BMQ215 @ | 273 | 860 | 1.28 | 1.8 | 20 lb. + 22 lb. | 8.50 |
| 88 | 3/4 | Y506 + BMQ218 # | 443 | 790 | 1.09 | 2.8 | 23 lb. + 24 lb. | 9.12 |
| | 1 | Y508 + BMQ220 # | 608 | 1175 | 1.24 | 3.2 | 28 lb. + 30 lb. | 10.38 |
| 20:1 | 1-1/2 | Y522 + BMQ224 @ | 920 | 1770 | 1.22 | 4.8 | 49 lb. + 46 lb. | 11.38 |
| Ratio | 2 | Y523 + BMQ226 # | 1246 | 1625 | 1.19 | 5.8 | 50 lb. + 59 lb. | 12.75 |
| | 3 | Y530 + BMQ230 # | 1871 | 2170 | 1.08 | 8.4 | 52 lb. + 80 lb. | 12.75 |

@ = 1000:1 Constant Torque (TENV)

# = 20:1 Constant Torque (TEFC)

Note: All motors have bases.

Output torque is measured in inch-pounds. Overhung load is measured in pounds.

See page 154 for "AG" dimension on drawing.

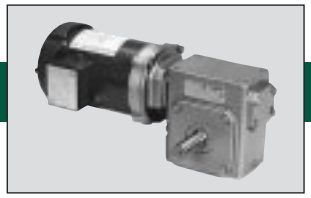

# Style BMQ

## AC Inverter Duty Gearmotor

### Three Phase • Totally Enclosed
### 230VAC-60Hz
### 1750 RPM Input Speed

| Output RPM | Motor HP | Model Number Motor + Reducer | Output TQ (IN. LBS.) | OHL (LBS.) | Service Factor | F.L. AMPS 230V | Apprx. Weight Motor + Reducer | AG Dim. |
|---|---|---|---|---|---|---|---|---|
| | 1/4 | Y500 + BMQ213 @ | 167 | 700 | 1.50 | 1.0 | 18 lb. + 17 lb. | 7.75 |
| | 1/2 | Y504 + BMQ215 @ | 324 | 860 | 1.09 | 1.8 | 20 lb. + 22 lb. | 8.50 |
| 70 | 3/4 | Y506 + BMQ220 # | 557 | 1210 | 1.34 | 2.8 | 23 lb. + 30 lb. | 9.12 |
| | 1 | Y508 + BMQ220 # | 743 | 1210 | 1.01 | 3.2 | 28 lb. + 30 lb. | 10.38 |
| 25:1 | 1-1/2 | Y522 + BMQ224 @ | 1117 | 1770 | 1.01 | 4.8 | 49 lb. + 46 lb. | 11.38 |
| Ratio | 2 | Y523 + BMQ230 # | 1517 | 2170 | 1.38 | 5.8 | 50 lb. + 80 lb. | 12.75 |
| | 3 | Y530 + BMQ232 # | 2302 | 2275 | 1.16 | 8.4 | 52 lb. + 83 lb. | 12.75 |
| | 1/4 | Y500 + BMQ213 @ | 191 | 700 | 1.31 | 1.0 | 18 lb. + 17 lb. | 7.75 |
| | 1/2 | Y504 + BMQ218 @ | 408 | 790 | 1.19 | 1.8 | 20 lb. + 24 lb. | 8.50 |
| 58 | 3/4 | Y506 + BMQ220 # | 638 | 1255 | 1.19 | 2.8 | 23 lb. + 30 lb. | 9.12 |
| | 1 | Y508 + BMQ224 # | 859 | 1770 | 1.32 | 3.2 | 28 lb. + 46 lb. | 10.38 |
| 30:1 | 1-1/2 | Y522 + BMQ226 @ | 1335 | 1625 | 1.10 | 4.8 | 49 lb. + 59 lb. | 11.38 |
| Ratio | 2 | Y523 + BMQ230 # | 1765 | 2170 | 1.19 | 5.8 | 50 lb. + 80 lb. | 12.75 |
| | 3 | Y530 + BMQ232 # | 2649 | 2275 | 1.00 | 8.4 | 52 lb. + 83 lb. | 12.75 |
| | 1/4 | Y500 + BMQ213 @ | 237 | 700 | 1.04 | 1.0 | 18 lb. + 17 lb. | 7.75 |
| 44 | 1/2 | Y504 + BMQ220 @ | 523 | 1315 | 1.42 | 1.8 | 20 lb. + 30 lb. | 8.50 |
| | 3/4 | Y506 + BMQ224 # | 808 | 1770 | 1.39 | 2.8 | 23 lb. + 46 lb. | 9.12 |
| 40:1 | 1 | Y508 + BMQ224 # | 1078 | 1770 | 1.04 | 3.2 | 28 lb. + 46 lb. | 10.38 |
| Ratio | 1-1/2 | Y522 + BMQ230 @ | 1663 | 2170 | 1.21 | 4.8 | 49 lb. + 80 lb. | 11.38 |
| | 2 | Y523 + BMQ232 # | 2250 | 2275 | 1.17 | 5.8 | 50 lb. + 83 lb. | 12.75 |
| | 1/4 | Y500 + BMQ215 @ | 256 | 860 | 1.32 | 1.0 | 18 lb. + 22 lb. | 7.75 |
| 35 | 1/2 | Y504 + BMQ220 @ | 638 | 1385 | 1.13 | 1.8 | 20 lb. + 30 lb. | 8.50 |
| 50:1 | 3/4 | Y506 + BMQ224 # | 960 | 1770 | 1.13 | 2.8 | 23 lb. + 46 lb. | 9.12 |
| Ratio | 1 | Y508 + BMQ226 # | 1325 | 1625 | 1.08 | 3.2 | 28 lb. + 59 lb. | 10.38 |
| | 1-1/2 | Y522 + BMQ230 @ | 1980 | 2170 | 1.02 | 4.8 | 49 lb. + 80 lb. | 11.38 |
| | 1/4 | Y500 + BMQ215 @ | 285 | 860 | 1.13 | 1.0 | 18 lb. + 22 lb. | 7.75 |
| 29 | 1/2 | Y504 + BMQ224 @ | 747 | 1770 | 1.35 | 1.8 | 20 lb. + 46 lb. | 8.50 |
| 60:1 | 3/4 | Y506 + BMQ226 # | 1143 | 1625 | 1.18 | 2.8 | 23 lb. + 59 lb. | 9.12 |
| Ratio | 1 | Y508 + BMQ230 # | 1505 | 2170 | 1.28 | 3.2 | 28 lb. + 80 lb. | 10.38 |
| | 1-1/2 | Y522 + BMQ232 @ | 2324 | 2275 | 1.05 | 4.8 | 49 lb. + 83 lb. | 11.38 |
| 22 | 1/4 | Y500 + BMQ220 @ | 450 | 1495 | 1.22 | 1.0 | 18 lb. + 30 lb. | 7.75 |
| 80:1 | 1/2 | Y504 + BMQ226 @ | 946 | 1625 | 1.15 | 1.8 | 20 lb. + 59 lb. | 8.50 |
| Ratio | 3/4 | Y506 + BMQ230 # | 1412 | 2170 | 1.19 | 2.8 | 23 lb. + 80 lb. | 9.12 |
| | 1 | Y508 + BMQ232 # | 1943 | 2275 | 1.03 | 3.2 | 28 lb. + 83 lb. | 10.38 |
| 18 | 1/4 | Y500 + BMQ224 @ | 528 | 1770 | 1.23 | 1.0 | 18 lb. + 46 lb. | 7.75 |
| 100:1 Ratio | 1/2 | Y504 + BMQ230 @ | 1096 | 2170 | 1.21 | 1.8 | 20 lb. + 80 lb. | 8.38 |

@ = 1000:1 Constant Torque (TENV)

# = 20:1 Constant Torque (TEFC)

Note: All motors have bases.

Output torque is measured in inch-pounds. Overhung load is measured in pounds.

See page 154 for "AG" dimension on drawing.

# Style TMQ

## AC Inverter Duty Gearmotor

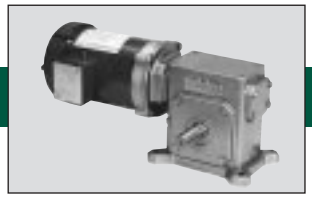

### Three Phase • Totally Enclosed
### 230VAC-60Hz
### 1750 RPM Input Speed

| Output RPM | Motor HP | Model Number Motor + Reducer | Output TQ (IN. LBS.) | OHL (LBS.) | Service Factor | F.L. AMPS 230V | Apprx. Weight Motor + Reducer | AG Dim. |
|---|---|---|---|---|---|---|---|---|
| | 1/4 | Y500 + TMQ213 @ | 41 | 700 | 4.23 | 1.0 | 18 lb. + 19 lb. | 7.75 |
| | 1/2 | Y504 + TMQ213 @ | 81 | 700 | 2.12 | 1.8 | 20 lb. + 19 lb. | 8.50 |
| 350 | 3/4 | Y506 + TMQ213 # | 122 | 700 | 1.41 | 2.8 | 23 lb. + 19 lb. | 9.12 |
| | 1 | Y508 + TMQ213 # | 163 | 700 | 1.06 | 3.2 | 28 lb. + 19 lb. | 10.38 |
| 5:1 | 1-1/2 | Y522 + TMQ215 @ | 248 | 860 | 1.03 | 4.8 | 49 lb. + 24 lb. | 11.38 |
| Ratio | 2 | Y523 + TMQ220 # | 333 | 1000 | 1.26 | 5.8 | 50 lb. + 33 lb. | 12.75 |
| | 3 | Y530 + TMQ224 # | 504 | 1770 | 1.30 | 8.4 | 52 lb. + 54 lb. | 12.75 |
| | 5 | Y372 + TMQ230 # | 846 | 2170 | 1.33 | 13.4 | 88 lb. + 96 lb. | 14.06 |
| | 1/4 | Y500 + TMQ213 @ | 56 | 700 | 3.48 | 1.0 | 18 lb. + 19 lb. | 7.75 |
| | 1/2 | Y504 + TMQ213 @ | 112 | 700 | 1.74 | 1.8 | 20 lb. + 19 lb. | 8.50 |
| 233 | 3/4 | Y506 + TMQ213 # | 168 | 700 | 1.16 | 2.8 | 23 lb. + 19 lb. | 9.12 |
| | 1 | Y508 + TMQ215 # | 238 | 860 | 1.24 | 3.2 | 28 lb. + 24 lb. | 10.38 |
| 7-1/2:1 | 1-1/2 | Y522 + TMQ218 @ | 363 | 790 | 1.11 | 4.8 | 49 lb. + 26 lb. | 11.38 |
| Ratio | 2 | Y523 + TMQ220 # | 489 | 1035 | 1.19 | 5.8 | 50 lb. + 33 lb. | 12.75 |
| | 3 | Y530 + TMQ224 # | 748 | 1770 | 1.16 | 8.4 | 52 lb. + 54 lb. | 12.75 |
| | 5 | Y372 + TMQ230 # | 1257 | 2170 | 1.21 | 13.4 | 88 lb. + 96 lb. | 14.06 |
| | 1/4 | Y500 + TMQ213 @ | 78 | 700 | 2.93 | 1.0 | 18 lb. + 19 lb. | 7.75 |
| | 1/2 | Y504 + TMQ213 @ | 156 | 700 | 1.47 | 1.8 | 20 lb. + 19 lb. | 8.50 |
| 175 | 3/4 | Y506 + TMQ215 # | 230 | 860 | 1.36 | 2.8 | 23 lb. + 24 lb. | 9.12 |
| | 1 | Y508 + TMQ215 # | 307 | 860 | 1.02 | 3.2 | 28 lb. + 24 lb. | 10.38 |
| 10:1 | 1-1/2 | Y522 + TMQ220 @ | 490 | 1035 | 1.39 | 4.8 | 49 lb. + 33 lb. | 11.38 |
| Ratio | 2 | Y523 + TMQ220 # | 653 | 1035 | 1.05 | 5.8 | 50 lb. + 33 lb. | 12.75 |
| | 3 | Y530 + TMQ224 # | 984 | 1770 | 1.03 | 8.4 | 52 lb. + 54 lb. | 12.75 |
| | 5 | Y372 + TMQ230 # | 1653 | 2185 | 1.09 | 13.4 | 88 lb. + 96 lb. | 14.06 |
| | 1/4 | Y500 + TMQ213 @ | 111 | 700 | 2.20 | 1.0 | 18 lb. + 19 lb. | 7.75 |
| | 1/2 | Y504 + TMQ213 @ | 222 | 700 | 1.10 | 1.8 | 20 lb. + 19 lb. | 8.50 |
| 117 | 3/4 | Y506 + TMQ215 # | 324 | 700 | 1.03 | 2.8 | 23 lb. + 24 lb. | 9.12 |
| | 1 | Y508 + TMQ218 # | 461 | 700 | 1.03 | 3.2 | 28 lb. + 26 lb. | 10.38 |
| 15:1 | 1-1/2 | Y522 + TMQ220 @ | 709 | 1125 | 1.04 | 4.8 | 49 lb. + 33 lb. | 11.38 |
| Ratio | 2 | Y523 + TMQ224 # | 951 | 1770 | 1.15 | 5.8 | 50 lb. + 54 lb. | 12.75 |
| | 3 | Y530 + TMQ230 # | 1445 | 2170 | 1.40 | 8.4 | 52 lb. + 96 lb. | 12.75 |
| | 5 | Y372 + TMQ232 # | 2417 | 2275 | 1.06 | 13.4 | 88 lb. + 99 lb. | 14.06 |
| | 1/4 | Y500 + TMQ213 @ | 142 | 700 | 1.75 | 1.0 | 18 lb. + 19 lb. | 7.75 |
| 88 | 1/2 | Y504 + TMQ215 @ | 273 | 860 | 1.28 | 1.8 | 20 lb. + 24 lb. | 8.50 |
| | 3/4 | Y506 + TMQ218 # | 443 | 790 | 1.09 | 2.8 | 23 lb. + 26 lb. | 9.12 |
| 20:1 | 1 | Y508 + TMQ220 # | 608 | 1175 | 1.24 | 3.2 | 28 lb. + 33 lb. | 10.38 |
| Ratio | 1-1/2 | Y522 + TMQ224 @ | 920 | 1770 | 1.22 | 4.8 | 49 lb. + 54 lb. | 11.38 |
| | 2 | Y523 + TMQ226 # | 1246 | 1625 | 1.19 | 5.8 | 50 lb. + 69 lb. | 12.75 |
| | 3 | Y530 + TMQ230 # | 1871 | 2170 | 1.08 | 8.4 | 52 lb. + 96 lb. | 12.75 |

@ = 1000:1 Constant Torque (TENV)

# = 20:1 Constant Torque (TEFC)

Note: All motors have bases.

Output torque is measured in inch-pounds. Overhung load is measured in pounds.

See page 154 for "AG" dimension on drawing.

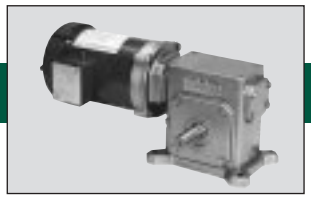

# Style TMQ

## AC Inverter Duty Gearmotor

### Three Phase • Totally Enclosed
### 230VAC-60Hz
### 1750 RPM Input Speed

| Output RPM | Motor HP | Model Number Motor + Reducer | Output TQ (IN. LBS.) | OHL (LBS.) | Service Factor | F.L. AMPS 230V | Apprx. Weight Motor + Reducer | AG Dim. |
|---|---|---|---|---|---|---|---|---|
| | 1/4 | Y500 + TMQ213 @ | 167 | 700 | 1.50 | 1.0 | 18 lb. + 19 lb. | 7.75 |
| | 1/2 | Y504 + TMQ215 @ | 324 | 860 | 1.09 | 1.8 | 20 lb. + 24 lb. | 8.50 |
| 70 | 3/4 | Y506 + TMQ220 # | 557 | 1210 | 1.34 | 2.8 | 23 lb. + 33 lb. | 9.12 |
| | 1 | Y508 + TMQ220 # | 743 | 1210 | 1.01 | 3.2 | 28 lb. + 33 lb. | 10.38 |
| 25:1 | 1-1/2 | Y522 + TMQ224 @ | 1117 | 1770 | 1.01 | 4.8 | 49 lb. + 54 lb. | 11.38 |
| Ratio | 2 | Y523 + TMQ230 # | 1517 | 2170 | 1.38 | 5.8 | 50 lb. + 96 lb. | 12.75 |
| | 3 | Y530 + TMQ232 # | 2302 | 2275 | 1.16 | 8.4 | 52 lb. + 99 lb. | 12.75 |
| | 1/4 | Y500 + TMQ213 @ | 191 | 700 | 1.31 | 1.0 | 18 lb. + 19 lb. | 7.75 |
| | 1/2 | Y504 + TMQ218 @ | 408 | 790 | 1.19 | 1.8 | 20 lb. + 26 lb. | 8.50 |
| 58 | 3/4 | Y506 + TMQ220 # | 638 | 1255 | 1.19 | 2.8 | 23 lb. + 33 lb. | 9.12 |
| | 1 | Y508 + TMQ224 # | 859 | 1770 | 1.32 | 3.2 | 28 lb. + 33 lb. | 10.38 |
| 30:1 | 1-1/2 | Y522 + TMQ226 @ | 1335 | 1625 | 1.10 | 4.8 | 49 lb. + 69 lb. | 1138 |
| Ratio | 2 | Y523 + TMQ230 # | 1765 | 2170 | 1.19 | 5.8 | 50 lb. + 96 lb. | 12.75 |
| | 3 | Y530 + TMQ232 # | 2649 | 2275 | 1.00 | 8.4 | 52 lb. + 99 lb. | 12.75 |
| | 1/4 | Y500 + TMQ213 @ | 237 | 700 | 1.04 | 1.0 | 18 lb. + 19 lb. | 7.75 |
| 44 | 1/2 | Y504 + TMQ220 @ | 523 | 1315 | 1.42 | 1.8 | 20 lb. + 33 lb. | 8.50 |
| | 3/4 | Y506 + TMQ224 # | 808 | 1770 | 1.39 | 2.8 | 23 lb. + 54 lb. | 9.12 |
| 40:1 | 1 | Y508 + TMQ224 # | 1078 | 1770 | 1.04 | 3.2 | 28 lb. + 54 lb. | 10.38 |
| Ratio | 1-1/2 | Y522 + TMQ230 @ | 1663 | 2170 | 1.21 | 4.8 | 49 lb. + 96 lb. | 11.38 |
| | 2 | Y523 + TMQ232 # | 2250 | 2275 | 1.17 | 5.8 | 50 lb. + 99 lb. | 12.75 |
| | 1/4 | Y500 + TMQ215 @ | 256 | 860 | 1.32 | 1.0 | 18 lb. + 24 lb. | 7.75 |
| 35 | 1/2 | Y504 + TMQ220 @ | 638 | 1385 | 1.13 | 1.8 | 20 lb. + 33 lb. | 8.50 |
| 50:1 | 3/4 | Y506 + TMQ224 # | 960 | 1770 | 1.13 | 2.8 | 23 lb. + 54 lb. | 9.12 |
| Ratio | 1 | Y508 + TMQ226 # | 1325 | 1625 | 1.08 | 3.2 | 28 lb. + 69 lb. | 10.38 |
| | 1-1/2 | Y522 + TMQ230 @ | 1980 | 2170 | 1.02 | 4.8 | 49 lb. + 96 lb. | 11.38 |
| | 1/4 | Y500 + TMQ215 @ | 285 | 860 | 1.13 | 1.0 | 18 lb. + 24 lb. | 7.75 |
| 29 | 1/2 | Y504 + TMQ224 @ | 747 | 1770 | 1.35 | 1.8 | 20 lb. + 54 lb. | 8.50 |
| 60:1 | 3/4 | Y506 + TMQ226 # | 1143 | 1625 | 1.18 | 2.8 | 23 lb. + 69 lb. | 9.12 |
| Ratio | 1 | Y508 + TMQ230 # | 1505 | 2170 | 1.28 | 3.2 | 28 lb. + 96 lb. | 10.38 |
| | 1-1/2 | Y522 + TMQ232 @ | 2324 | 2275 | 1.05 | 4.8 | 49 lb. + 99 lb. | 11.38 |
| 22 | 1/4 | Y500 + TMQ220 @ | 450 | 1495 | 1.22 | 1.0 | 18 lb. + 33 lb. | 7.75 |
| 80:1 | 1/2 | Y504 + TMQ226 @ | 946 | 1625 | 1.15 | 1.8 | 20 lb. + 69 lb. | 8.50 |
| Ratio | 3/4 | Y506 + TMQ230 # | 1412 | 2170 | 1.19 | 2.8 | 23 lb. + 96 lb. | 9.12 |
| | 1 | Y508 + TMQ232 # | 1943 | 2275 | 1.03 | 3.2 | 28 lb. + 99 lb. | 10.38 |
| 18 | 1/4 | Y500 + TMQ224 @ | 528 | 1770 | 1.23 | 1.0 | 18 lb. + 54 lb. | 7.75 |
| 100:1 Ratio | 1/2 | Y504 + TMQ230 @ | 1096 | 2170 | 1.21 | 1.8 | 20 lb. + 96 lb. | 8.50 |

@ = 1000:1 Constant Torque (TENV)

# = 20:1 Constant Torque (TEFC)

Note: All motors have bases.

Output torque is measured in inch-pounds. Overhung load is measured in pounds.

See page 154 for "AG" dimension on drawing.

# Motorized Reducer

## Dimensions

### Styles BMQ

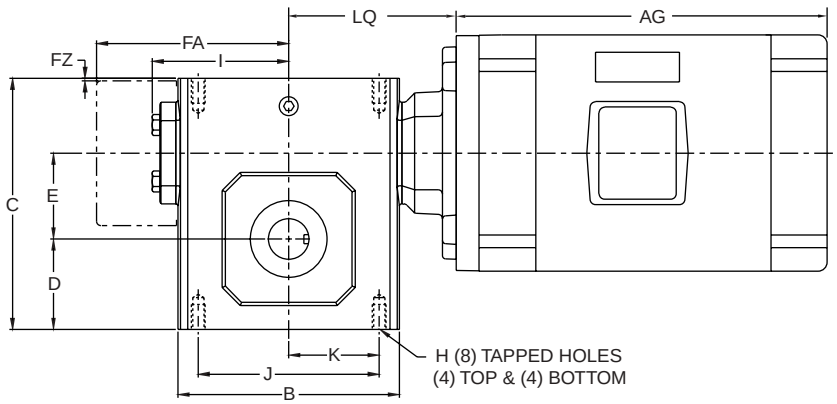


*See page 19 for all reducer dimensions.*

*Note: The input shaft may be rotated in either direction. Units are for mounting as shown. Contact factory for other mountings.* ***See motorized rating tables for, pages 136-153, "AG" dimension.***

### Styles TMQ

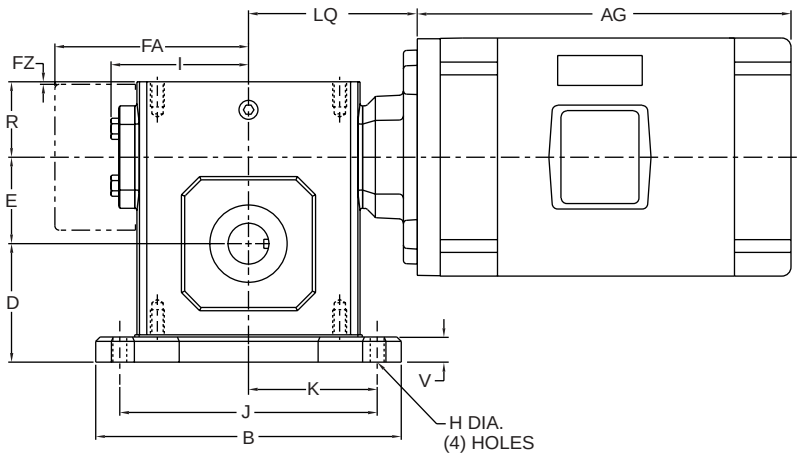


*See page 23 for all reducer dimensions.*

*Note: The input shaft may be rotated in either direction. Units are for mounting as shown. Contact factory for other mountings.* ***See motorized rating tables for, pages 136-153, "AG" dimension.***

*Contact factory for dimensions of styles not shown. All dimensions and weighs shown are for reference only.*
*Contact factory for certified dimensions*

# Kits & Accessories

# Accessories

## Base Kits & Riser Blocks

### Horizontal Base Kits

### Vertical Base Kits

| Unit Size | Kit Number |
|---|---|
| 213 | 16460 |
| 215 | 16461 |
| 218 | 16462 |
| 220 | 16463 |
| 224 | 16464 |
| 226 | 16465 |
| 230 | 16466 |
| 232 | 16467 |
| 242 | 16468 |
| 252 | 16469 |
| 2600 | 13162 |
| 2700 | 13462 |
| 2800 | 13463 |
| 21000 | 13464 |

| Unit Size | Kit Number |
|---|---|
| 213 | 16470 |
| 215 | 16471 |
| 218 | 16471 |
| 220 | 16473 |
| 224 | 16474 |
| 226 | 16475 |
| 230 | 16476 |
| 232 | 16477 |
| 242 | 16478 |
| 252 | 16479 |
| 2600 | 13160 |
| 2700 | 13467 |
| 2800 | 13468 |
| 21000 | 13469 |

### J Mount Base Kits

### Riser Blocks

| Unit Size | Kit Number |
|---|---|
| 213 | 16480 |
| 215 | 16481 |
| 218 | 16481 |
| 220 | 16483 |
| 224 | 16484 |
| 226 | 16485 |
| 230 | 16486 |
| 232 | 16487 |
| 242 | 16488 |
| 252 | 16489 |

| Unit Size | Kit Number |
|---|---|
| 215 | 16514 |
| 218 | 16515 |
| 220 | 16516 |
| 224 | 16517 |
| 226 | 16518 |
| 230 | 16519 |
| 232 | 16520 |
| 242 | 16521 |
| 252 | 16522 |

# C Flange Kits and Hollow Shaft Tie Rod Kits

## C Flange Motor Mounting Kits

| Unit Size | "C" Flange Size | Kit Number |
|---|---|---|
| 213 | 48C | 16500 |
| | 56C | 16501 |
| | 140TC | 16502 |
| 215 | 48C | 16530 |
| | 56C | 16531 |
| | 140TC | 16532 |
| 218 | 48C | 16530 |
| | 56C | 16531 |
| | 140TC | 16532 |
| 220 | 48C | 16530 |
| | 56C | 16531 |
| | 140TC | 16532 |
| 224 | 56C | 16503 |
| | 140TC | 16504 |
| | 180TC | 16505 |
| | 210TC | 16506 |
| 226 | 56C | 16503 |
| | 140TC | 16504 |
| | 180TC | 16505 |
| | 210TC | 16506 |

| Unit Size | "C" Flange Size | Kit Number |
|---|---|---|
| 230 | 56C | 16507 |
| | 140TC | 16508 |
| | 180TC | 16509 |
| | 210TC | 16533 |
| 232 | 56C | 16507 |
| | 140TC | 16508 |
| | 180TC | 16509 |
| | 210TC | 16533 |
| 242 | 56C | 16527 |
| | 140TC | 16534 |
| | 180TC | 16528 |
| | 210TC | 16535 |
| | 250TC | 16529 |
| 252 | 56C | 16527 |
| | 140TC | 16534 |
| | 180TC | 16528 |
| | 210TC | 16535 |
| | 250TC | 16529 |
| 2600 | 180TC | 13163 |
| | 210TC | 13168 |
| | 250TC | 13164 |

## Hollow Shaft Tie Rod Kit

| Unit Size | Kit Number |
|---|---|
| 213 | 12178 |
| 215 | 12178 |
| 218 | 12178 |
| 220 | 12178 |
| 224 | 12178 |
| 226 | 12178 |
| 230 | 12178 |
| 232 | 12178 |
| 242 | 12178 |
| 252 | 13345 |
| 2600 | 13345 |
| 2700 | N/A |
| 2800 | N/A |
| 21000 | N/A |

## Hollow Output Mounting Flange Kit
### (Hollow Output Units Only)

| Unit Size | Kit Number |
|---|---|
| 213 | 16490 |
| 215 | 16490 |
| 218 | 16492 |
| 220 | 16493 |
| 224 | 16494 |
| 226 | 16495 |
| 230 | 16496 |
| 232 | 16496 |
| 242 | 16498 |
| 252 | 16499 |
| 2600 | 13165 |

*Note: Unit sizes 213-252 have only one low speed face with bolts that this flange kit can be mounted to. Please verify the correct assembly position before ordering.*

# Accessories

## Kits

### Double Reduction Adaptor Kit

| Unit Size (Prim/Sec) | Kit Number | Secondary Unit Quill Size |
|---|---|---|
| 213/213 | 16537 | 56C |
| 213/215 | 16537 | 56C |
| 213/218 | 16537 | 56C |
| 213/220 | 16537 | 56C |
| 213/224 | 16538 | 56C |
| 213/226 | N/A | - |
| 215/230 | N/A | - |
| 215/232 | N/A | - |
| 220/242 | 16539 | 180TC |
| 226/252 | 16540 | 210TC |
| 232/2600 | 16541 | 250TC |

*Note: Double reduction adapters not available as a kit for unit sizes 1700-11000. These units must be ordered as double reduction from the factory.*

*Kit for use with a "B" or "BMQ" style primary unit and a quill style (MQ) secondary unit. Secondary unit must have the size quill "C" flange shown above.*

*For recommended ratio combinations, see table on page 170.*

### Oil Level Sight Gage

| Unit Size | Part Number |
|---|---|
| 213 | 95255 |
| 215 | 95255 |
| 218 | 95255 |
| 220 | 95255 |
| 224 | 95255 |
| 226 | 95255 |
| 230 | 95255 |
| 232 | 95255 |
| 242 | 95255 |
| 252 | 95256 |
| 2600 | 95256 |
| 2700 | 95257 |
| 2800 | 95257 |
| 21000 | 95258 |

**For use to visually check oil level of gear box.**

### Touch Up Paint

16 oz. can

*Contact Factory*

### Slide Base

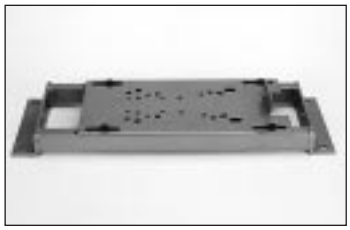

**For use with B/BM/BMQ or H/HM/HMQ units to adjust output shaft location.**

| Unit Size | Part No. |
|---|---|
| 213 | 13669 |
| 215 | 13669 |
| 218 | 13669 |
| 220 | 13669 |
| 224 | 13670 |
| 226 | 13670 |
| 230 | 13671 |
| 232 | 13671 |

| Motor Frame Size | Part No. |
|---|---|
| 48C | 13672 |
| 56C | 13672 |
| 143T | 13672 |
| 182T | 13673 |

### Worm Gear Reducer Lubricant

| Size | Part Number | |
|---|---|---|
| | Mobil 600W | Mobil SHC 634* |
| Quart | 16563 | 16566 |
| Gallon | 16564 | NA |
| 2.5 Gallons | 16565 | NA |

**Synthetic lubricant*

# GROVE GEAR Worm Gear Speed Reducers

## Grove Gold Option

## For Special Applications

***Low Maintenance/Lubed for Life, Good For:***

All types of conveying
Packaging machines
Rotating applications
Hard to get to locations
Gates and doors
Car wash industry
Chemical industry
Plastics industry...

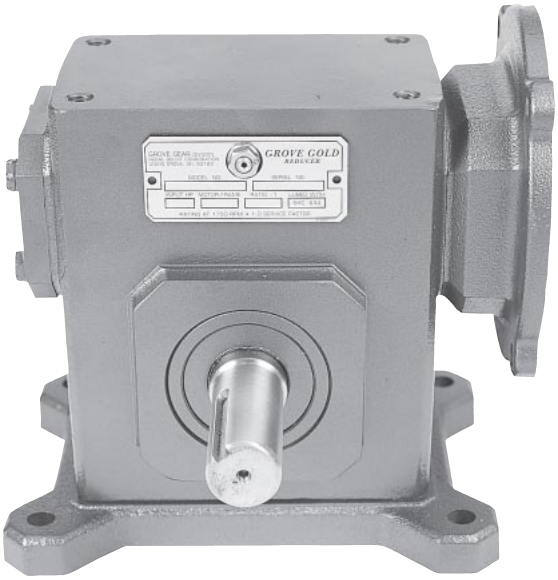


## Features

- Internal pressure compensating system keeps the internal pressure down, oil in the box, and contaminants out.
- Double lip Viton® Seals for long life in harsh environments.
- Synthetic Lubricant never needs to be changed.
- All cast iron exterior for strength and durability.
- "O"ring sealed covers for positive lubrication retention.
- Metal nameplate drive screwed to housing for positive identification.
- Non-compressible metal shims keep bearing settings constant.
- Worms are cut, heat treated, ground and polished to provide efficient and quiet operations.

## Sizes Available

All sizes from 1/3" CD (213) to the 5-1/4" CD (252).

## Models Available

All models available in Single and Double Reduction Styles.

# FLEXACLEAN

## GROVE GEAR BISSC Certified Worm Gear Speed Reducers

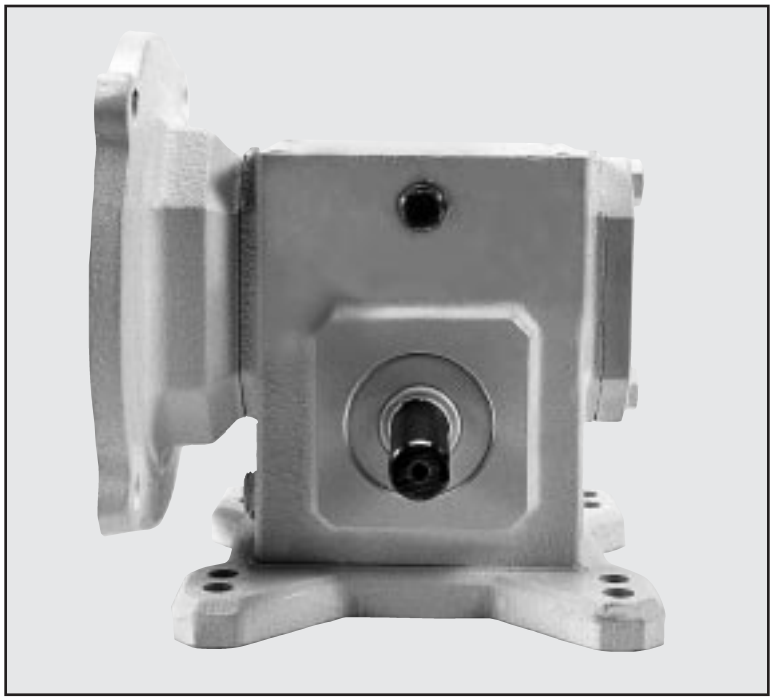

### For Special Applications

***Suitable for Wash Down In:***

- Food Industry
- Baking Industry
- Poultry Industry
- Canning Industry
- Meat Packing Industry
- Bottling Industry
- Chemical Industry
- All types of Conveying
- Pharmaceutical Industry...

### Certifications:

Baking Industry Sanitation Standard Committee (BISSC) Certified
Standard Lubrication is USDA H-2 Approved
Paint is USDA Approved for incidental food contact.

### Features

- White, USDA approved paint on the all cast iron exterior of the reducer.
- Nickel plated shafts are standard for long rust resistant life. (Stainless Steel also available.)
- Smooth Exterior of the reducer for easy cleaning.
- Double lip Viton® seals for long life in wash-down applications.
- Solid head plugs and bolts for cleanability.
- Stainless Steel nameplates sealed to housing for positive identification.

### Models & Styles Available

Reducer sizes 213 to 2600 are available in the following styles:
***B, BM, BMQ, T, TM, TMQ, U, UM, UMQ, V, VM, VMQ, J, JM, JMQ, H, HM, and HMQ.***

Reducer sizes 2700, 2800, and 21000 are available in the following styles:
***B, T, U, V, and H.***

# GROVE GEAR Stainless Steel Reducers

## For Very Special Applications

***The Ultimate Heavy Duty Wash-Down Speed Reducer:***

All Wash Down Applications
Poultry Processing
Sea Food Processing
Car Wash Applications
Chemical Industry
Pharmaceutical Industry

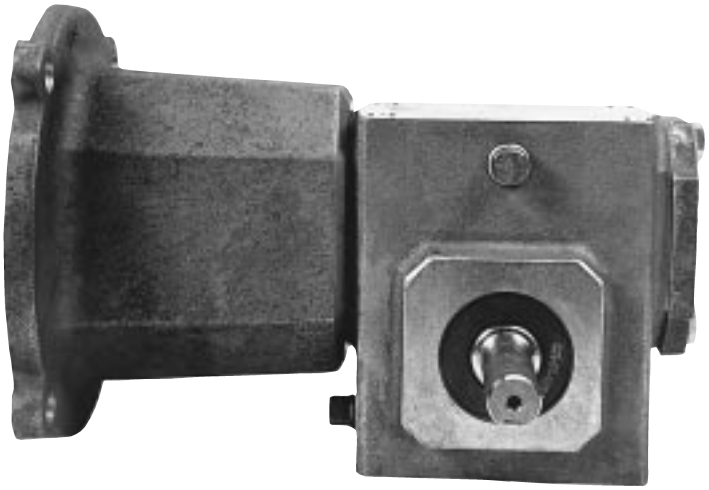

## Features

- Housing and covers are 316 grade Cast Stainless Steel to withstand the harshest environments.
- Output shaft is 303 stainless steel for long rust resistant life.
- Internal pressure compensating system keeps internal pressure down, oil in the box, and contaminants out.
- Double lip stainless steel case Viton® seals for superior performance in harsh environment.
- Synthetic lubricant never needs to be changed.
- "O"ring sealed covers for positive lubrication retention.
- Stainless Steel nameplate drive screwed to housing for easy identification.
- Non-compressible stainless steel shims keep factory bearing settings constant.
- Worms are cut, heat treated, ground, and polished to provide efficient, quiet operation.
- External hardware all stainless steel.

## Sizes and Models Available...

| Model | Size | | | |
|---|---|---|---|---|
| | 213 | 215 | 224 | 232 |
| BM | ✓ | ✓ | | |
| BMQ | ✓ | ✓ | ✓ | ✓ |
| HMQ | | | ✓ | ✓ |
| DMQ | | | ✓ | ✓ |
| DHMQ | | | ✓ | ✓ |

# Quiet Drives

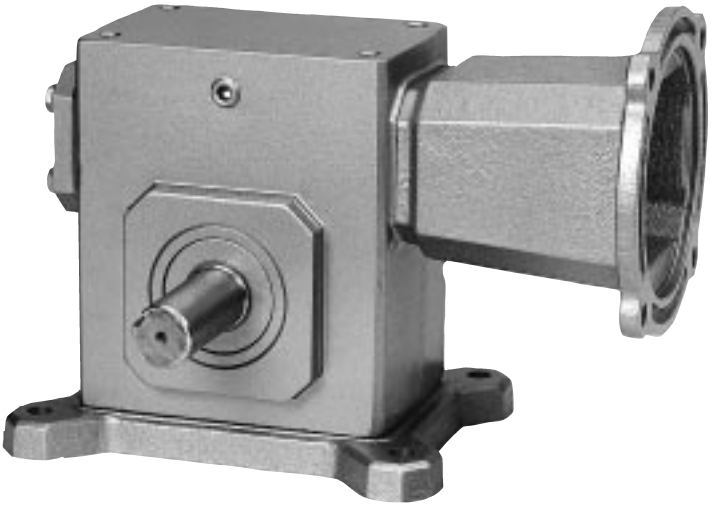

## For Low Noise Applications

***Designed and Assembled to your Specifications:***

- Quiet Room Applications
- Medical Industry
- Entertainment Industry
- Exercise Equipment
- Conveyors all Types
- Food Preparation
- Positioning devices

## Features

- Solid cast iron housing and covers for quiet, steady performance.
- Worms are cut, heat treated, ground, and polished for smooth quiet operation.
- Solid style input shaft with bearings on both ends trapped in place for vibration free, quiet performance.
- The reducer is tailored to your needs; contact factory with your requirements and a complete description of the application.

**Sizes Available:** All sizes from 1 1/3"CD (213) to 10"CD (21000)

**Styles Available:** All types except quill input motor flange models

Contact factory for availability and pricing.

# Double Input Shafts

## Solid/Solid

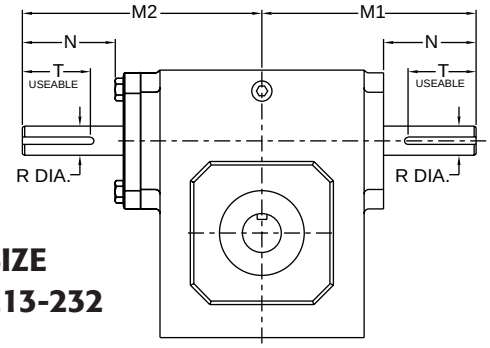


**SIZE 213-232**

| Unit | M1 | M2 | N | R | T** |
|---|---|---|---|---|---|
| 213 | 3.82 | 4.37 | 1.76 | .500 | 1/8 x 1.44 |
| 215 | 4.35 | 4.90 | 1.76 | .625 | 3/16 x 1.50 |
| 218 | 4.45 | 5.00 | 1.76 | .625 | 3/16 x 1.50 |
| 220 | 4.82 | 5.37 | 1.76 | .625 | 3/16 x 1.50 |
| 224 | 5.51 | 6.15 | 2.38 | .750 | 3/16 x 1.50 |
| 226 | 6.07 | 6.72 | 2.38 | .750 | 3/16 x 1.50 |
| 230 | 6.57 | 7.22 | 2.38 | .875 | 3/16 x 1.50 |
| 232 | 6.76 | 7.40 | 2.38 | .875 | 3/16 x 1.50 |

***keyway width by length*

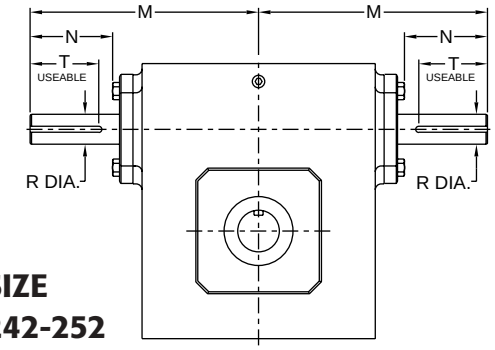


**SIZE 242-252**

| Unit | M | N | R | T** |
|---|---|---|---|---|
| 242 | 9.57 | 3.47 | 1.250 | 1/4 x 2.88 |
| 252 | 10.88 | 3.38 | 1.250 | 1/4 x 3.00 |

***keyway width by length*

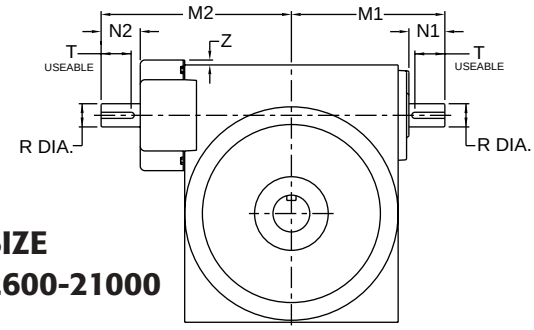


**SIZE 2600-21000**

| Unit | M1 | M2 | N1 | N2 | R | T** | Z |
|---|---|---|---|---|---|---|---|
| 2600 | 11.78 | 14.55 | 3.41 | 3.41 | 1.5 | 3/8 x 3.00 | .33 |
| 2700 | 11.50 | 13.88 | 2.97 | 2.51 | 1.625 | 3/8 x 2.81 | .35 |
| 2800 | 12.50 | 15.50 | 2.84 | 2.98 | 1.875 | 1/2 x 2.81 | .57 |
| 21000 | 15.50 | 18.82 | 3.76 | 4.13 | 2.250 | 1/2 x 3.69 | .51 |

***keyway width by length*

## Quill/Solid

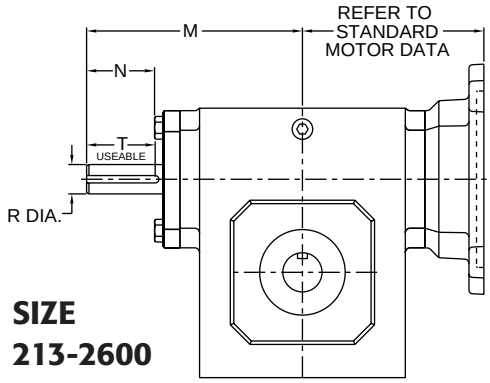


**SIZE 213-2600**

| Unit | M | N | R | T** |
|---|---|---|---|---|
| 213 | 4.37 | 1.76 | .500 | 1/8 x 1.44 |
| 215 | 4.90 | 1.76 | .625 | 3/16 x 1.50 |
| 218 | 5.00 | 1.76 | .625 | 3/16 x 1.50 |
| 220 | 5.37 | 1.76 | .625 | 3/16 x 1.50 |
| 224 | 6.15 | 2.38 | .750 | 3/16 x 1.50 |
| 226 | 6.72 | 2.38 | .750 | 3/16 x 1.50 |
| 230 | 7.22 | 2.38 | .875 | 3/16 x 1.50 |
| 232 | 7.40 | 2.38 | .875 | 3/16 x 1.50 |
| 242 | 9.55 | 3.47 | 1.250 | 1/4 x 2.88 |
| 252 | 10.88 | 3.39 | 1.250 | 1/4 x 3.00 |
| 2600* | 14.55 | 3.41 | 1.500 | 3/8 x 3.00 |

**comes standard with fan (not shown)*
***keyway width by length*

*Note: When ordering a double input shaft for single reduction units, include the letter "A" added to the assembly position number in the unit description (i.e., TMQ 213-20-2A-56C). When requesting a double input shaft for double and triple reduction units, contact factory. For availability of vertical double input shafts, contact factory.*

# Engineering Data

## Formulas

*(Linear)*
**HORSEPOWER** = $\dfrac{\text{Load in Pounds X Feet Per Minute}}{33{,}000}$

*(In. - lbs.)*
**TORQUE** = $\dfrac{63025 \text{ X HP}}{\text{RPM}}$

**OVERHUNG LOAD** = $\dfrac{\text{Output Torque X Overhung Load Factor}}{\text{Radius (of Sprocket, Pinion, Sheave or Pulley)}}$

*(Rotational)*
**HORSEPOWER** = $\dfrac{\text{Torque X RPM}}{63025}$

*(In. - lbs.)*
**TORQUE** = $\dfrac{\text{HP X } 63025}{\text{RPM}}$

**EFFICIENCY** = $\dfrac{\text{Output HP}}{\text{Input HP}}$

# Engineering Information Index


| | Page |
|---|---|
| **Cover Bolt Circle Dimensions** | 166 |
| **Lubrication Recommendations** | 166 |
| **Special Lubrication Requirements — 2700 and larger** | 167 |
| **Oil Capacities** | 168 |
| **Vent Plug Locations** | 168 |
| **Hollow Output Shaft Bore Sizes** | 169 |
| **Motor Compatibility** | 169 |
| **Double Reduction Ratio Combination** | |
| Worm/Worm | 170 |
| Helical/Worm | 170 |
| **Shaft Rotation** | 171 |
| **Exact Ratios** | 171 |
| **Service Factors** | 172 |
| **AGMA Service Factors By Application** | 173 - 174 |
| **Torque & Horsepower** | 175 |
| **Overhung Load** | 175 |
| **Installation, Lubrication and Maintenance Instructions** | 176 - 180 |
| **Parts List Index** | 181 |
| **Parts List** | |
| Single Reduction | 182 - 184 |
| Double Reduction | 182 - 185 |
| Triple Reduction | 182 - 186 |
| Helical Primary | 187 |

# Engineering Data

## Bolt Circle Dimensions & Lubrication

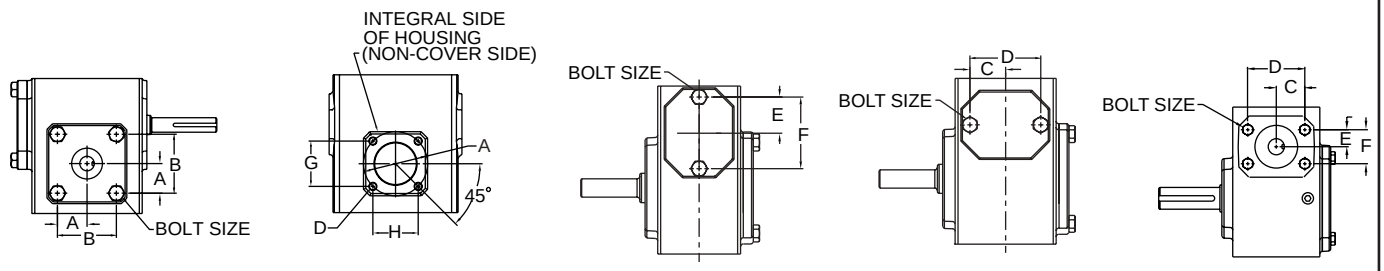


Special reverse housing assembly | Size 213 | Sizes 215 through 220 | Sizes 224 through 280

Special reverse housing assembly - Contact factory for availability.

## Bolt Circle

### Output Cover

| Unit | A | B | G | H | Bolt Size |
|---|---|---|---|---|---|
| 213 | 1.016 | 2.033 | 1.768 | 1.768 | .312-18 |
| 215 | 1.016 | 2.033 | 1.768 | 1.768 | .312-18 |
| 218 | 1.480 | 2.961 | 2.051 | 2.051 | .312-18 |
| 220 | 1.480 | 2.961 | 2.652 | 2.652 | .312-18 |
| 224 | 1.856 | 3.712 | 2.652 | 2.652 | .312-18 |
| 226 | 1.856 | 3.712 | 2.652 | 2.652 | .312-18 |
| 230 | 2.298 | 4.596 | 3.536 | 3.536 | .375-16 |
| 232 | 2.298 | 4.596 | 3.536 | 3.536 | .375-16 |
| 242 | 2.939 | 5.877 | 3.712 | 3.712 | .438-14 |
| 252 | 3.359 | 6.717 | 5.303 | 5.303 | .438-14 |
| 2600 | Consult Factory | | | | .500-13 |
| 2700 | Consult Factory | | | | .500-13 |
| 2800 | Consult Factory | | | | .500-13 |
| 21000 | Consult Factory | | | | .500-13 |

### Input Cover

| Unit | C | D | E | F | Bolt Size |
|---|---|---|---|---|---|
| 213 | 1.219 | 2.438 | N/A | N/A | .312-18 |
| 215 | 1.219 | 2.438 | N/A | N/A | .312-18 |
| 218 | 1.219 | 2.438 | N/A | N/A | .312-18 |
| 220 | 1.219 | 2.438 | N/A | N/A | .312-18 |
| 224 | 1.313 | 2.625 | 0.781 | 1.562 | .312-18 |
| 226 | 1.313 | 2.625 | 0.781 | 1.562 | .312-18 |
| 230 | 1.313 | 2.625 | 0.781 | 1.562 | .312-18 |
| 232 | 1.313 | 2.625 | 0.781 | 1.562 | .312-18 |
| 242 | 1.600 | 3.200 | 1.050 | 2.100 | .438-14 |
| 252 | 1.600 | 3.200 | 1.050 | 2.100 | .438-14 |
| 2600 | 1.370 | 2.740 | 1.370 | 2.740 | .438-14 |
| 2700 | 2.033 | 2.033 | 2.033 | 2.033 | .438-14 |
| 2800 | 2.121 | 2.121 | 2.121 | 2.121 | .500-13 |
| 21000 | Consult Factory | | | | .625-11 |

## Lubrication

With the exception of unit sizes 2700, 2800 and 21000 which are shipped dry, all standard reducers ordered from the factory are filled with lubricant for continuous operation within a 30° to 100° F ambient temperature range (for intermittent duty below 60° F, contact factory). Double and triple reduction units have separate oil sumps and must be filled/checked independently. Prior to startup, verify that the oil is at the level shown on the drawings on page 166. If the ambient temperature will be outside the range for the lubricant installed at the factory, drain and refill the reducer with the proper viscosity lubricant prior to use. Consult the chart on page 165 or the factory for alternate lubricants.

**Change Intervals:** Standard compounded lubricants should be changed every six months or 2500 operating hours, whichever comes first. Factory installed synthetic lubricants should be changed every four years or 11,000 hours, whichever comes first.

**Internal pressure compensating system:** Grove Gold and stainless steel reducers come standard with an internal pressure compensating system and synthetic oil pre-installed at the factory. It is not necessary to vent these reducers, and they can be used as supplied from the factory.

**CAUTION** Oil should be changed more often if reducer is used in a severe environment. (i.e. dusty, humid)

**CAUTION** In the Food and Drug Industry (including animal food), consult the lubrication supplier for recommendation of lubricants which are acceptable to the Food and Drug Administration and/or other authoritative bodies having jurisdiction. Factory supplied oil is not suitable for these applications or this industry.

## Special Lubrication Requirements - Sizes 218 & Larger

Units shipped from the factory are assembled to properly lubricate all internal components based on a specific assumed mounting orientation. The factory assumed mounting orientations are given below. If a size 218 or larger unit will be mounted in a different orientation than listed below, or run with sustained input speeds less than 900 RPM, it should be specified with the order. The unit can then be modified to assure proper lubrication.

| Factory Assumed Mounting Orientation | Applicable Unit Styles* | |
|---|---|---|
| Worm Over | B, T, F, H, FH, C, | Single Reduction |
| | D, DT, DF, DH, DFH | Double Reduction Worm-Worm |
| | DX, DXT, DXH, DXFH, | Double Reduction Helical-Worm |
| | TT | Triple Reduction Worm-Worm-Worm |
| Worm Under | U | Single Reduction |
| | DU | Double Reduction Worm-Worm |
| Vertical Output | VL/VH, FE | Single Reduction |
| | DVL/DVH, DFE | Double Reduction Worm-Worm |
| | DXVL/DXVH, DXFE | Double Reduction Helical-Worm |
| Vertical Input | J | Single Reduction |
| | DJ | Double Reduction Worm-Worm |
| | DXJ | Double Reduction Helical-Worm |

** Includes "M" and "MQ" versions of all styles listed*

The precision-made gears and bearings in Grove Gear Speed Reducers require high-grade lubricants of the proper viscosity to maintain trouble-free performance. For best results, use lubricants on the following chart for worm gear reducers:

| Manufacturer | 30° to 100° F Ambient Temperature* AGMA Compounded No. 7 | 50° to 125° F Ambient Temperature* AGMA Compounded No. 8 |
|---|---|---|
| Amoco Oil Co. | Worm Gear Oil | Cylinder Oil #680 |
| Chevron USA, Inc. | Cylinder Oil #460X | Cylinder Oil #680X |
| Exxon Co. USA | Cylesstic TK-460 | Cylesstic TK-680 |
| Gulf Oil Co. | Senate 460 | Senate 680D |
| Mobil Oil Corp. | 600 W Super Cylinder | Extra Hecla Super |
| Shell Oil Co. | Valvata Oil J460 | Valvata Oil J680 |
| Sun Oil Co. | Gear Oil 7C | Gear Oil 8C |
| Texaco | Honor Cylinder Oil | 650T Cylinder Oil |
| Union Oil Co. of CA | Steaval A | Worm Gear Lube 140 |

Standard factory-installed lubricant, shipped with 6.00" C.D. and smaller units.

***Temperature range for continuous duty. For intermittent duty, contact factory.**

Some gear lubricants contain E.P. additives that can be corrosive to gear bronze. Avoid lubricants that are compounded with sulfur and/or chlorine.

For temperature ranges not shown, contact factory.

For lubrication requirements of helical reducers (primaries of helical/worm reducers, ratio multipliers, and styles BAMCQ, BAMC, and BA), contact factory.

# Engineering Data

## Lubrication & Vent Plug Location

### Oil Capacities (pints)

| Mounting Position | UNIT SIZE | | | | | | | | | | | | | |
|---|---|---|---|---|---|---|---|---|---|---|---|---|---|---|
| | 213 | 215 | 218 | 220 | 224 | 226 | 230 | 232 | 242 | 252 | 2600 | 2700* | 2800* | 21000* |
| Worm Over | 1/4 | 3/4 | 3/4 | 1 1/4 | 1 1/2 | 2 1/2 | 3 1/2 | 4 1/2 | 7 | 11 3/4 | 19 1/2 | 35 | 48 | 72 |
| Worm Under | 1/2 | 1 | 1 1/4 | 1 3/4 | 2 1/2 | 3 3/4 | 5 1/4 | 6 3/4 | 9 1/2 | 19 | 20 1/2 | 32 3/4 | 51 1/4 | 80 |
| Vertical Output | 1/4 | 1 | 1 | 1 3/4 | 2 | 3 | 4 1/4 | 5 1/2 | 8 | 15 1/2 | 20 | 20 3/4 | 28 3/4 | 40 |
| Vertical Input | 1/4 | 1 | 1 | 1 1/2 | 2 | 3 | 4 1/2 | 5 3/4 | 8 | 15 1/2 | 20 1/3 | 36 1/2 | 50 | 75 |
| Extended Bearing | N/A | N/A | N/A | N/A | N/A | N/A | N/A | 8 | 12 | 17 | 27 | 40 | 63 | 102 |
| Worm over on Secondary Unit of Double Reduction | | | | N/A | N/A | N/A | N/A | 12 | 19 1/4 | 20 | 30 1/3 | 50 1/3 | 71 1/2 | 107 1/4 |

*Shipped Dry

16 oz. = 1 pint
2 pints = 1 quart
4 quarts = 1 gallon
1 gallon = 128 oz. = 231 cu. in.

Always check for proper oil level after filling. Capacities vary somewhat with model and mounting position. Oil should rise to bottom edge of level hole. Do not overfill.

### Synthetic Lubricants

Synthetic lubricants provide the potential for numerous benefits including wider operating temperature range and increased interval between changes. Use of synthetics can cause problems if they are not compatible with the seals or the conventional lubricants they replace. For normal ambient temperatures (-10°F to 105°F)* we recommend the use of Mobil SHC 634 which is compatible with the standard compounded oil shipped in our product and the Viton® seal material used through size 252. For other temperatures, contact factory for a recommendation.

For synthetic lubricants to be used in helical reducers (primaries of helical/worm reducers, ratio multipliers, and styles BAMCQ, BAMC, and BA), contact factory.

***Temperature range for continuous duty. For intermittent duty, contact factory.**

### Standard Speed Reducer Mounting Positions & Vent Plug, Level and Drain Locations

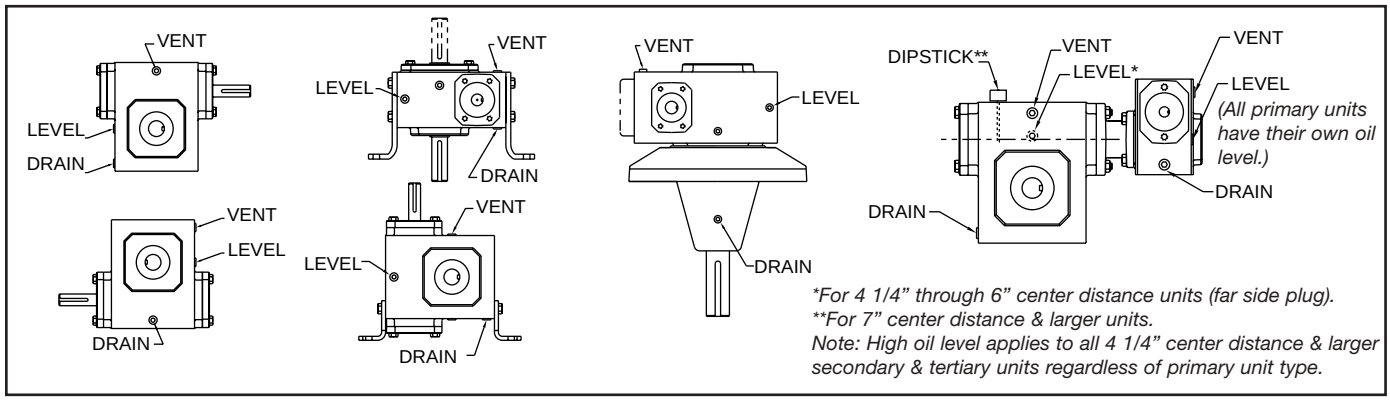

# Engineering Data

## Hollow Output Shaft Bore Sizes

### Hollow Output Shaft Bore Sizes

| Fract. Size | Decimal Equiv. | KWY* | 213 | 215 | 218 | 220 | 224 | 226 | 230 | 232 | 242 | 252 | 2600 | 2700 | 2800 | 21000 |
|---|---|---|---|---|---|---|---|---|---|---|---|---|---|---|---|---|
| 5/8 | .625 | 3/16 x 3/32 | * | * | * | | | | | | | | | | | |
| 11/16 | .688 | 3/16 x 3/32 | | | * | | | | | | | | | | | |
| 3/4 | .750 | 3/16 x 3/32 | | | * | | | | | | | | | | | |
| 7/8 | .875 | 3/16 x 3/32 | | | * | | | | | | | | | | | |
| 1 | 1.000 | 1/4 x 1/8 | | | * | * | * | * | | | | | | | | |
| 1-1/8 | 1.125 | 1/4 x 1/8 | | | | * | * | * | | | | | | | | |
| 1-3/16 | 1.188 | 1/4 x 1/8 | | | | * | * | * | * | * | | | | | | |
| 1-1/4 | 1.250 | 1/4 x 1/8 | | | | * | * | * | * | * | | | | | | |
| 1-7/16 | 1.438 | 3/8 x 3/16 | | | | * | * | * | * | * | * | | | | | |
| 1-1/2 | 1.500 | 3/8 x 3/16 | | | | | | | * | * | * | | | | | |
| 1-5/8 | 1.625 | 3/8 x 3/16 | | | | | | | * | * | * | | | | | |
| 1-11/16 | 1.688 | 3/8 x 3/16 | | | | | | | * | * | * | | | | | |
| 1-3/4 | 1.750 | 3/8 x 3/16 | | | | | | | * | * | * | | | | | |
| 1-7/8 | 1.875 | 1/2 x 1/4 | | | | | | | | | * | | | | | |
| 1-15/16 | 1.938 | 1/2 x 1/4 | | | | | | | * | * | * | | | | | |
| 2 | 2.000 | 1/2 x 1/4 | | | | | | | | | * | * | * | | | |
| 2-3/16 | 2.188 | 1/2 x 1/4 | | | | | | | | | * | * | * | | | |
| 2-1/4 | 2.250 | 1/2 x 1/4 | | | | | | | | | | * | * | | | |
| 2-7/16 | 2.438 | 5/8 x 5/16 | | | | | | | | | | * | * | * | | |
| 2-1/2 | 2.500 | 5/8 x 5/16 | | | | | | | | | | * | * | * | | |
| 2-11/16 | 2.688 | 5/8 x 5/16 | | | | | | | | | | * | * | * | | |
| 2-15/16 | 2.938 | 3/4 x 3/8 | | | | | | | | | | * | * | * | | |
| 3 | 3.000 | 3/4 x 3/8 | | | | | | | | | | * | * | * | | |
| 3-3/16 | 3.188 | 3/4 x 3/8 | | | | | | | | | | * | * | | | |
| 3-7/16 | 3.438 | 7/8 x 7/16 | | | | | | | | | | * | * | * | * | * |
| 3-15/16 | 3.938 | 1 x 1/2 | | | | | | | | | | | | * | * | * |
| 4-3/16 | 4.188 | 1 x 1/2 | | | | | | | | | | | | | * | |
| 4-7/16 | 4.438 | 1 x 1/2 | | | | | | | | | | | | | * | * |
| 4-15/16 | 4.938 | 1-1/4 x 5/8 | | | | | | | | | | | | | | * |
| 5-7/16 | 5.438 | 1-1/4 x 5/8 | | | | | | | | | | | | | | * |

**Dimensions refer to driven shaft.*
*Note: Special bores are available upon request. Consult factory for information.*

### Motor Compatibility Chart

| Nema Motor Data | | | | | | |
|---|---|---|---|---|---|---|
| Unit Size | 48C | 56C | 140TC | 180TC | 210TC | 250TC |
| 213 | Yes | Yes | Yes | No | No | No |
| 215 | Yes | Yes | Yes | No | No | No |
| 218 | Yes | Yes | Yes | No | No | No |
| 220 | Yes | Yes | Yes | No | No | No |
| 224 | No | Yes | Yes | Yes | Yes * | No |
| 226 | No | Yes | Yes | Yes | Yes * | No |
| 230 | No | Yes | Yes | Yes | Yes | No |
| 232 | No | Yes | Yes | Yes | Yes | No |
| 242 | No | Yes | Yes | Yes | Yes | Yes |
| 252 | No | Yes | Yes | Yes | Yes | Yes |
| 2600 | No | Yes ** | Yes ** | Yes | Yes | Yes |
| 2700 | No | No | No | Yes * | Yes * | Yes* |
| 2800 | No | No | No | No | Yes * | Yes* |

| Metric Motor Data | | | | | | |
|---|---|---|---|---|---|---|
| Unit Size | D63D | D71D | D80D | D90D | D100LD D112MD | D132D |
| 213 | Yes ** | Yes ** | Yes ** | No | No | No |
| 215 | Yes ** | Yes ** | Yes ** | No | No | No |
| 218 | Yes ** | Yes ** | Yes ** | No | No | No |
| 220 | Yes ** | Yes ** | Yes ** | No | No | No |
| 224 | No | Yes ** | Yes ** | No | No | No |
| 226 | No | Yes ** | Yes ** | Yes ** | No | No |
| 230 | No | Yes ** | Yes ** | Yes ** | No | No |
| 232 | No | Yes ** | Yes ** | Yes ** | Yes ** | No |
| 242 | No | No | No | Yes ** | Yes ** | Yes ** |
| 252 | No | No | No | Yes ** | Yes ** | Yes ** |
| 2600 | No | No | No | No | No | No |
| 2700 | No | No | No | No | No | No |
| 2800 | No | No | No | No | No | No |

** Available in "M" style "C" face only*
*** Available in "Quill" style "C" face only*

# Engineering Data

## Double Reduction Ratio Combinations

### Worm/Worm Ratio Combinations

| Total | 213 | | 215 | | 218 | | 220 | | 224 | | 226 | | 230 | | 232 | | 242 | | 252 | | 2600 | |
|---|---|---|---|---|---|---|---|---|---|---|---|---|---|---|---|---|---|---|---|---|---|---|
| Ratio | P 213 | S 213 | P 213 | S 215 | P 213 | S 218 | P 213 | S 220 | P 213 | S 224 | P 213 | S 226 | P 215 | S 230 | P 215 | S 232 | P 220 | S 242 | P 226 | S 252 | P 232 | S 2600 |
| 75:1 | 5 | 15 | 5 | 15 | 5 | 15 | 5 | 15 | 5 | 15 | 5 | 15 | 5 | 15 | 5 | 15 | 5 | 15 | 5 | 15 | 5 | 15 |
| 100:1 | 5 | 20 | 5 | 20 | 5 | 20 | 5 | 20 | 5 | 20 | 5 | 20 | 5 | 20 | 5 | 20 | 5 | 20 | 5 | 20 | 5 | 20 |
| 150:1 | 10 | 15 | 7 1/2 | 20 | 10 | 15 | 10 | 15 | 10 | 15 | 7 1/2 | 20 | 10 | 15 | 5 | 30 | 7 1/2 | 20 | 7 1/2 | 20 | 10 | 15 |
| 200:1 | 10 | 20 | 10 | 20 | 10 | 20 | 10 | 20 | 10 | 20 | 10 | 20 | 10 | 20 | 10 | 20 | 10 | 20 | 10 | 20 | 10 | 20 |
| 250:1 | 10 | 25 | 10 | 25 | 10 | 25 | 10 | 25 | 10 | 25 | 10 | 25 | 10 | 25 | 10 | 25 | 10 | 25 | 10 | 25 | 10 | 25 |
| 300:1 | 10 | 30 | 15 | 20 | 10 | 30 | 15 | 20 | 15 | 20 | 15 | 20 | 20 | 15 | 10 | 30 | 15 | 20 | 15 | 20 | 20 | 15 |
| 400:1 | 20 | 20 | 20 | 20 | 20 | 20 | 20 | 20 | 20 | 20 | 20 | 20 | 20 | 20 | 20 | 20 | 20 | 20 | 20 | 20 | 20 | 20 |
| 500:1 | 20 | 25 | 25 | 20 | 25 | 20 | 25 | 20 | 25 | 20 | 25 | 20 | 20 | 25 | 25 | 20 | 25 | 20 | 25 | 20 | 25 | 20 |
| 600:1 | 20 | 30 | 30 | 20 | 20 | 30 | 30 | 20 | 20 | 30 | 30 | 20 | 20 | 30 | 20 | 30 | 30 | 20 | 30 | 20 | 30 | 20 |
| 750:1 | 30 | 25 | 30 | 25 | 25 | 30 | 25 | 30 | 25 | 30 | 30 | 25 | 30 | 25 | 25 | 30 | 25 | 30 | 30 | 25 | 30 | 25 |
| 900:1 | 30 | 30 | 30 | 30 | 30 | 30 | 30 | 30 | 30 | 30 | 30 | 30 | 30 | 30 | 30 | 30 | 30 | 30 | 30 | 30 | 60 | 15 |
| 1000:1 | 40 | 25 | 50 | 20 | 50 | 20 | 50 | 20 | 50 | 20 | 50 | 20 | 40 | 25 | 25 | 40 | 25 | 40 | 40 | 25 | 50 | 20 |
| 1200:1 | 40 | 30 | 60 | 20 | 40 | 30 | 40 | 30 | 40 | 30 | 60 | 20 | 40 | 30 | 40 | 30 | 40 | 30 | 40 | 30 | 60 | 20 |
| 1500:1 | 60 | 25 | 60 | 25 | 50 | 30 | 50 | 30 | 50 | 30 | 60 | 25 | 60 | 25 | 50 | 30 | 50 | 30 | 60 | 25 | 60 | 25 |
| 1800:1 | 60 | 30 | 60 | 30 | 60 | 30 | 60 | 30 | 60 | 30 | 60 | 30 | 60 | 30 | 60 | 30 | 60 | 30 | 60 | 30 | 60 | 30 |
| 2400:1 | 60 | 40 | 60 | 40 | 60 | 40 | 60 | 40 | 60 | 40 | 60 | 40 | 60 | 40 | 60 | 40 | 60 | 40 | 60 | 40 | 60 | 40 |
| 3000:1 | 60 | 50 | 60 | 50 | 60 | 50 | 60 | 50 | 60 | 50 | 60 | 50 | 60 | 50 | 60 | 50 | 60 | 50 | 60 | 50 | 60 | 50 |
| 3600:1 | 60 | 60 | 60 | 60 | 60 | 60 | 60 | 60 | 60 | 60 | 60 | 60 | 60 | 60 | 60 | 60 | 60 | 60 | 60 | 60 | 60 | 60 |

***P - The primary gear box in the combination.***
***S - The secondary gear box in the combination.***

*Note: Actual Ratio Combinations supplied by factory may vary from above depending on application and manufacturing requirements.*

### Helical/Worm Ratio Combinations

| Total | 213 | | 215 | | 218 | | 220 | | 224 | | 226 | | 230 | | 232 | | 242 | | 252 | | 2600 | |
|---|---|---|---|---|---|---|---|---|---|---|---|---|---|---|---|---|---|---|---|---|---|---|
| Ratio | P 1 | S 213 | P 1 | S 215 | P 1 | S 218 | P 1 | S 220 | P 2 | S 224 | P 2 | S 226 | P 2 | S 230 | P 2 | S 232 | P 3 | S 242 | P 3 | S 252 | P 3 | S 2600 |
| 10:1 | 2 | 5 | 2 | 5 | 2 | 5 | 2 | 5 | 2 | 5 | 2 | 5 | 2 | 5 | 2 | 5 | 2 | 5 | 2 | 5 | 2 | 5 |
| 15:1 | 2 | 7 1/2 | 2 | 7 1/2 | 2 | 7 1/2 | 2 | 7 1/2 | 2 | 7 1/2 | 2 | 7 1/2 | 2 | 7 1/2 | 2 | 7 1/2 | 2 | 7 1/2 | 2 | 7 1/2 | 2 | 7 1/2 |
| 20:1 | 2 | 10 | 2 | 10 | 2 | 10 | 2 | 10 | 2 | 10 | 2 | 10 | 2 | 10 | 2 | 10 | 2 | 10 | 2 | 10 | 2 | 10 |
| 25:1 | 5 | 5 | 5 | 5 | 5 | 5 | 5 | 5 | 5 | 5 | 5 | 5 | 5 | 5 | 5 | 5 | 5 | 5 | 5 | 5 | 5 | 5 |
| 30:1 | 2 | 15 | 2 | 15 | 2 | 15 | 3 | 10 | 3 | 10 | 3 | 10 | 3 | 10 | 3 | 10 | 3 | 10 | 2 | 15 | 2 | 15 |
| 40:1 | 4 | 10 | 4 | 10 | 4 | 10 | 4 | 10 | 4 | 10 | 4 | 10 | 4 | 10 | 4 | 10 | 4 | 10 | 2 | 20 | 2 | 20 |
| 45:1 | 3 | 15 | 3 | 15 | 3 | 15 | 3 | 15 | 3 | 15 | 3 | 15 | 3 | 15 | 3 | 15 | 3 | 15 | 3 | 15 | 3 | 15 |
| 50:1 | 5 | 10 | 5 | 10 | 5 | 10 | 5 | 10 | 5 | 10 | 5 | 10 | 5 | 10 | 5 | 10 | 5 | 10 | 2 | 25 | 2 | 25 |
| 60:1 | 4 | 15 | 4 | 15 | 4 | 15 | 4 | 15 | 4 | 15 | 3 | 20 | 4 | 15 | 4 | 15 | 4 | 15 | 4 | 15 | 3 | 20 |
| 75:1 | 5 | 15 | 5 | 15 | 5 | 15 | 5 | 15 | 5 | 15 | 5 | 15 | 5 | 15 | 5 | 15 | 5 | 15 | 5 | 15 | 3 | 25 |
| 80:1 | 4 | 20 | 4 | 20 | 4 | 20 | 4 | 20 | 4 | 20 | 4 | 20 | 4 | 20 | 4 | 20 | 4 | 20 | 4 | 20 | 4 | 20 |
| 100:1 | 4 | 25 | 5 | 20 | 5 | 20 | 5 | 20 | 5 | 20 | 5 | 20 | 5 | 20 | 5 | 20 | 5 | 20 | 5 | 20 | 4 | 25 |
| 125:1 | 5 | 25 | 5 | 25 | 5 | 25 | 5 | 25 | 5 | 25 | 5 | 25 | 5 | 25 | 5 | 25 | 5 | 25 | 5 | 25 | 5 | 25 |
| 150:1 | 5 | 30 | 5 | 30 | 5 | 30 | 5 | 30 | 5 | 30 | 5 | 30 | 5 | 30 | 5 | 30 | 5 | 30 | 5 | 30 | 5 | 30 |
| 200:1 | 5 | 40 | 5 | 40 | 5 | 40 | 5 | 40 | 5 | 40 | 5 | 40 | 5 | 40 | 5 | 40 | 5 | 40 | 5 | 40 | 5 | 40 |
| 250:1 | 5 | 50 | 5 | 50 | 5 | 50 | 5 | 50 | 5 | 50 | 5 | 50 | 5 | 50 | 5 | 50 | 5 | 50 | 5 | 50 | 5 | 50 |
| 300:1 | 5 | 60 | 5 | 60 | 5 | 60 | 5 | 60 | 5 | 60 | 5 | 60 | 5 | 60 | 5 | 60 | 5 | 60 | 5 | 60 | 5 | 60 |

***P - The primary gear box in the combination.***
***S - The secondary gear box in the combination.***

*Note: Actual Ratio Combinations supplied by factory may vary from above depending on application and manufacturing requirements.*

# Engineering Data

## Shaft Rotation & Exact Ratios

### Standard Shaft Rotation

Single Reduction

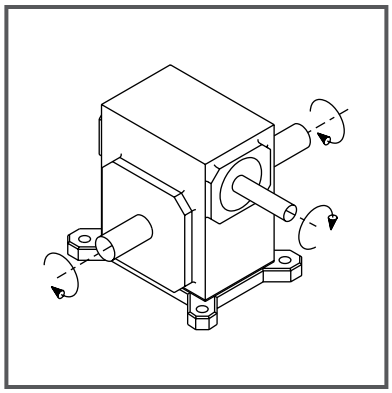

Double Reduction
Helical Worm

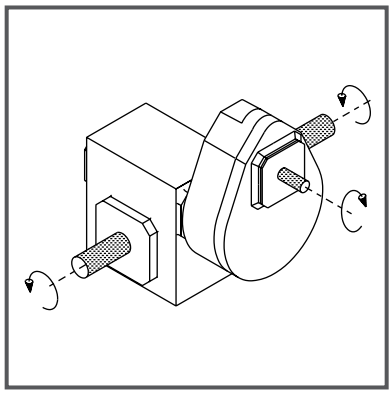

Double Reduction Worm/Worm

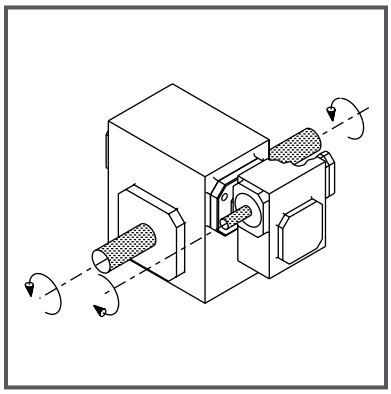

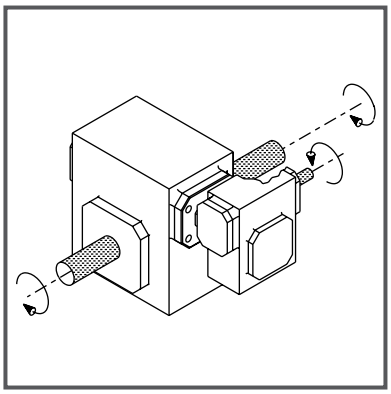

*Note: For opposite shaft rotation–consult factory.*

### Flexaline Exact Ratios

*X= Exact Ratio*

| Unit | 5 | 7.5 | 10 | 15 | 20 | 25 | 30 | 40 | 50 | 60 | 70 | 80 | 100 |
|---|---|---|---|---|---|---|---|---|---|---|---|---|---|
| 213 | X | X | X | X | X | X | X | X | X | X | NA | X | X |
| 215 | X | X | X | X | X | X | X | X | X | X | NA | X | X |
| 218 | X | X | X | X | X | X | X | X | X | X | NA | X | X |
| 220 | X | X | X | X | X | X | X | X | X | X | NA | X | X |
| 224 | X | X | X | X | X | X | X | X | X | X | NA | X | X |
| 226 | 5 1/6 | X | X | X | X | X | X | X | X | X | NA | X | X |
| 230 | X | X | X | X | X | X | X | X | X | X | NA | X | X |
| 232 | 5 1/6 | X | X | X | X | X | X | X | X | X | NA | X | X |
| 242 | 5 1/6 | X | X | X | X | X | X | X | X | X | NA | X | X |
| 252 | 5 1/8 | X | X | X | X | X | X | X | X | X | NA | X | X |
| 2600 | X | X | X | X | X | X | X | X | X | X | NA | X | X |
| 2700 | 5 1/8 | 7 2/5 | 9 3/4 | 14 2/3 | 20 1/2 | 24 1/2 | 29 1/2 | X | X | X | X | NA | NA |
| 2800 | 5 1/8 | 7 2/5 | 9 3/4 | 14 2/3 | 20 1/2 | 24 1/2 | 29 1/2 | X | X | X | X | NA | NA |
| 21000 | 5 1/8 | 7 1/3 | 9 3/4 | 14 2/3 | 20 1/2 | 24 1/2 | 29 1/2 | X | X | X | X | NA | NA |

# Engineering Data

## A.G.M.A. Service Factors

### Classes of Service

The worm gear speed reducer ratings in this catalog are for a 1.00 service factor or Class I service. A 1.00 service factor applies when the use of the reducer is for continuous service free from recurrent shock loading and does not exceed 10 hours per day. When operating conditions are different from those described above, the input horsepower and torque ratings shown in this catalog must be divided by the appropriate service factor indicated in the table below. The catalog ratings may be used without adjustments if the actual driven machine horsepower and torque requirements are multiplied by the appropriate service factor indicated in the table below.

### Service Factors

**Service factors for electric and hydraulic motors**
***(For service factors for single or multi-cylinder engines, see below)***

| Duration of Service (Hours per day) | Uniform Load | Moderate Shock | Heavy Shock | Extreme Shock |
|---|---|---|---|---|
| Occasional 1/2 Hour | --* | --* | 1.0 | 1.25 |
| Less than 3 Hours | 1.0 | 1.0 | 1.25 | 1.50 |
| 3 - 10 Hours | 1.0 | 1.25 | 1.50 | 1.75 |
| Over 10 Hours | 1.25 | 1.50 | 1.75 | 2.00 |

*Unspecified service factors should be 1.00 or as agreed upon by the user and manufacturer.

**Conversion table for single or multi-cylinder engines to find equivalent single or multi-cylinder service factor**

| Hydraulic or Electric Motor | Single Cylinder Engines | Multi-Cylinder Engines |
|---|---|---|
| 1.00 | 1.50 | 1.25 |
| 1.25 | 1.75 | 1.50 |
| 1.50 | 2.00 | 1.75 |
| 1.75 | 2.25 | 2.00 |
| 2.00 | 2.50 | 2.25 |

Normal starting or occasional peak loads, two or three times per day, up to 300% of catalog rating at 1800 RPM are permissible. If either the frequency or the magnitude of these loads exceed the above limits, a higher service factor is required and the application should be referred to the factory.

Worm gear reducers are not to be considered fail safe or self-locking devices. If these features are required, a properly sized, independent holding device should be utilized.

Depending upon gear geometry and operating conditions, worm gear reducers may or may not backdrive. Special consideration should be given to high inertia loads connected to the reducer output shaft. Consult factory for further details.

Reducers driven by brakemotors must be sized to accommodate motor driving, brake and inertia loads to prevent the braking torque or inertia loads from exceeding the motor rating.

**WARNING** *For safety, purchaser or user should provide protective guards over shaft extensions and any couplings, sheaves and belts, sprockets and chains, etc., mounted thereon.*

# Engineering Data

## A.G.M.A. Service Factors

| Application | Service Factor 3-10 Hrs. | Service Factor Over 10 Hrs. |
|---|---|---|
| AGITATORS | | |
| Pure Liquids | 1.00 | 1.25 |
| Liquids & Solids | 1.25 | 1.50 |
| Liquids-Variable Density | 1.25 | 1.50 |
| APRON CONVEYORS | | |
| Uniformly Loaded or Fed | 1.00 | 1.25 |
| Heavy Duty | 1.25 | 1.50 |
| APRON FEEDERS | 1.25 | 1.50 |
| ASSEMBLY CONVEYORS | | |
| Uniformly Loaded or Fed | 1.00 | 1.25 |
| Heavy Duty | 1.25 | 1.50 |
| BARGE HAUL PULLERS | 1.50 | 1.75 |
| BARKING | | |
| Drums (coupling connected) | | 1.75 |
| Mechanical | | 1.75 |
| BAR SCREENS (Sewage) | 1.00 | 1.25 |
| BELT CONVEYORS | | |
| Uniformly Loaded or Fed | 1.00 | 1.25 |
| Heavy Duty | 1.25 | 1.50 |
| BELT FEEDERS | 1.25 | 1.50 |
| BLOWERS | | |
| Centrifugal | 1.00 | 1.25 |
| Lobe | 1.25 | 1.50 |
| Vane | 1.00 | 1.25 |
| BOTTLING MACHINERY | 1.00 | 1.25 |
| BREWING & DISTILLING | | |
| Bottling Machinery | 1.00 | 1.25 |
| Brew Kettles, Cont. Duty | 1.00 | 1.25 |
| Can Filling Machines | 1.00 | 1.25 |
| Cookers-Cont. Duty | 1.00 | 1.25 |
| Mash Tubs-Cont. Duty | 1.00 | 1.25 |
| Scale Hoppers-Frequent Starts | 1.25 | 1.50 |
| BUCKET | | |
| Conveyors Uniform | 1.00 | 1.25 |
| Conveyors Heavy Duty | 1.25 | 1.50 |
| Elevators Cont. | 1.00 | 1.25 |
| Elevators Uniform | 1.00 | 1.25 |
| Elevators Heavy Duty | 1.25 | 1.50 |
| CALENDARS | | |
| Rubber | | 1.50 |
| Textile | 1.25 | 1.50 |
| CANE KNIVES | | 1.50 |
| CAN FILLING MACHINES | 1.00 | 1.25 |
| CAR DUMPERS | 1.50 | 1.75 |
| CAR PULLERS | 1.25 | 1.50 |
| CENTRIFUGAL | | |
| Blowers, Compressors, Discharge | | |
| Elevator, Fans or Pumps | 1.00 | 1.25 |
| CHAIN CONVEYORS | | |
| Uniformly Loaded or Fed | 1.00 | 1.25 |
| Heavy Duty | 1.25 | 1.50 |
| CLARIFIERS | 1.00 | 1.25 |
| CLASSIFIERS | 1.25 | 1.50 |
| CLAY WORKING INDUSTRY | | |
| Brick Press | 1.75 | 2.00 |
| Briquette Machines | 1.75 | 2.00 |
| Clay Working Machinery | 1.25 | 1.50 |
| Pug Mills | 1.25 | 1.50 |
| COMPRESSORS | | |
| Centrifugal | 1.00 | 1.25 |
| Lobe | 1.25 | 1.50 |
| Reciprocating: | | |
| Multi-Cylinder | 1.25 | 1.50 |
| Single Cylinder | 1.50 | 1.75 |
| CONCRETE MIXERS | | |
| Continuous | 1.25 | 1.50 |
| Intermittent | 1.25 | 1.50 |
| CONVEYORS-Uniformly Loaded or Fed | | |
| Apron, Assembly, Belt, Bucket, Chain, Flight, Oven, Screw | 1.00 | 1.25 |
| CONVEYORS-Severe Duty | | |
| Live Roll | Refer to Factory | |
| Reciprocating, Shaker | 1.50 | 1.75 |
| COOLING TOWER FANS | Refer to Factory | |
| CRANES | | |
| Dry Dock Cranes | Refer to Factory | |
| Main Hoist | 1.00 | 1.25 |
| Bridge and Trolley Travel | Refer to Factory | |
| CRUSHERS | | |
| Ore or Stone | 1.50 | 1.75 |
| Sugar | | 1.50 |
| DISC FEEDERS | 1.00 | 1.25 |
| DOUBLE ACTING PUMPS | | |
| 2 or more Cylinders | 1.25 | 1.50 |
| Single Cylinder | Refer to Factory | |
| DRAW BENCH (Metal Mills) | | |
| Carriage & Main Drive | 1.25 | 1.50 |
| DREDGES | | |
| Cable Reels, Conveyors | 1.25 | 1.50 |
| Cutter Head & Jig Drives | 1.75 | 2.00 |
| Maneuvering Winches, Pumps | 1.25 | 1.50 |
| Screen Drives | 1.50 | 1.75 |
| Stackers, Utility Winches | 1.25 | 1.50 |
| ELEVATORS | | |
| Bucket-Uniform Load | 1.00 | 1.25 |
| Bucket-Heavy Duty | 1.25 | 1.50 |
| Bucket-Continuous | 1.00 | 1.25 |
| Centrifugal Discharge | 1.00 | 1.50 |
| Escalators | Not approved | |
| Freight | Not approved | |
| Gravity Discharge | 1.00 | 1.25 |
| Man Lifts, Passenger | Not approved | |
| EXTRUDERS (Plastic) | | |
| Film Sheet, Coating, Rods, Pipe | | |
| Tubing | 1.25 | 1.25 |
| Blow Molders, Pre-plasticizers | | 1.50 |
| FANS | | |
| Centrifugal | 1.00 | 1.25 |
| Cooling Towers | | |
| Refer to Factory | | |
| Forced Draft | | 1.25 |
| Induced Draft | 1.25 | 1.50 |
| Large (Mine, etc.) | 1.25 | 1.50 |
| Large Industrial | 1.25 | 1.50 |
| Light (Small Diameter) | 1.00 | 1.25 |
| FEEDERS | | |
| Apron, Belt | 1.25 | 1.50 |
| Disc | 1.00 | 1.25 |
| Reciprocating | 1.75 | 2.00 |
| Screw | 1.25 | 1.50 |
| FLIGHT | | |
| Conveyors, Uniform | 1.00 | 1.25 |
| Conveyors, Heavy | 1.25 | 1.50 |
| FOOD INDUSTRY | | |
| Beet Slicers | 1.25 | 1.50 |
| Bottling, Can Filling Mach. | 1.00 | 1.25 |
| Cereal Cookers | 1.00 | 1.25 |
| Dough Mixers, Meat Grinders | 1.25 | 1.50 |
| HAMMER MILLS | 1.50 | 1.75 |
| HOISTS | | |
| Heavy Duty | 1.75 | 2.00 |
| Medium Duty | 1.25 | 1.50 |
| Skip Hoist | 1.25 | 1.50 |
| INDUCED DRAFT FANS | 1.25 | 1.50 |
| LAUNDRY WASHERS AND TUMBLERS | 1.25 | 1.50 |
| LINE SHAFTS | | |
| Driving Processing Equipment | 1.25 | 1.50 |
| Other Line Shafts, Light | 1.00 | 1.25 |
| LUMBER INDUSTRY | | |
| Barkers-Spindle Feed | 1.25 | 1.50 |
| Barkers-Main Drive | 1.75 | 1.75 |
| Carriage Drive | Refer to Factory | |
| Conveyors | | |
| Burner | 1.25 | 1.50 |
| Main or Heavy Duty | 1.50 | 1.50 |
| Main Log | 1.75 | 2.00 |
| Re-Saw Merry-Go-Round | 1.25 | 1.50 |
| Slab | 1.75 | 2.00 |
| Transfer | 1.25 | 1.50 |
| Chains-Floor | 1.50 | 1.50 |
| Chains-Green | 1.50 | 1.75 |
| Cut-Off Saws-Chain & Drag | 1.50 | 1.75 |
| Debarking Drums | 1.75 | 2.00 |
| Feeds-Edger | 1.25 | 1.50 |

# Engineering Data

## A.G.M.A. Service Factors

| Application | Service Factor 3-10 Hrs. | Service Factor Over 10 Hrs. |
|---|---|---|
| Feeds-Gang | 1.50 | 1.50 |
| Feeds-Trimmer | 1.25 | 1.50 |
| Log Deck | 1.50 | 1.50 |
| Log Hauls-Incline Well Type | 1.50 | 1.50 |
| Log Turning Devices | 1.50 | 1.50 |
| Planer Feed | 1.25 | 1.50 |
| Planer Tilting Hoist | 1.50 | 1.50 |
| Rolls-Live-Off Bearing-Roll Cases | 1.50 | 1.50 |
| Sorting Table, Tipple Hoist | 1.25 | 1.50 |
| Transfers-Chain & Craneway | 1.50 | 1.75 |
| Tray Drives | 1.25 | 1.50 |
| Veneer Lathe Drives | Refer to Factory | |
| MACHINE TOOLS | | |
| Auxiliary Drives | 1.00 | 1.25 |
| Bending Rolls | 1.25 | 1.50 |
| Main Drives | 1.25 | 1.50 |
| Notching Press (Belted) | Refer to Factory | |
| Plate Planers | 1.50 | 1.75 |
| Punch Press (Geared) | 1.50 | 1.75 |
| Tapping Machines | 1.50 | 1.75 |
| METAL MILLS | | |
| Draw Bench Carriages & Main Drives | 1.25 | 1.50 |
| Pinch, Dryer and Scrubber Rolls Reversing | Refer to Factory | |
| Slitters | 1.25 | 1.50 |
| Table Conveyors Non-Reversing | | |
| Group Drives | 1.25 | 1.50 |
| Individual Drives | 1.50 | 1.75 |
| Reversing Wire Drawing & Flattening Machines | 1.25 | 1.50 |
| Wire Winding Machines | 1.25 | 1.50 |
| MILLS, ROTARY | | |
| Ball and Rod Mills | | |
| with Spur Ring Gear | | 1.75 |
| with Helical Ring Gear | | 1.50 |
| Direct Connect | | 1.50 |
| Cement Kilns, Dryers, Coolers, Pebble, Plain & Wedge Bar Mills | | 1.50 |
| Tumbling Barrels | 1.50 | 1.75 |
| MIXERS (Also see Agitators) | | |
| Concrete, Cont. & Int. | 1.25 | 1.50 |
| Constant Density | 1.00 | 1.25 |
| Variable Density | 1.25 | 1.50 |
| OIL INDUSTRY | | |
| Chillers | 1.25 | 1.50 |
| Oil Well Pumping | Refer to Factory | |
| Paraffin Filter Press | 1.25 | 1.50 |
| Rotary Kilns | 1.25 | 1.50 |
| PAPER MILLS | | |
| Agitator (Mixer) | | 1.50 |
| Agitator for Pure Liquids | | 1.25 |
| Barking Drums, Barker-Mech. | | 1.75 |
| Beater | | 1.50 |
| Breaker Stack | | 1.25 |
| Calendar | | 1.25 |
| Chipper | | 1.75 |
| Chip Feeder | | 1.50 |
| Coating Rolls | | 1.25 |
| Conveyors- Chip, Bark, Chemical | | 1.25 |
| Log (inc. Slab) | | 1.75 |
| Couch Rolls | | 1.25 |
| Cutter | | 2.00 |
| Cylinder Molds | | 1.25 |
| Dryers- Paper Mach. & Conveyor Type | | 1.25 |
| Embosser | | 1.25 |
| Extruder | | 1.50 |
| Fourdrinier Rolls- Lumpbreaker, Wire Turning, Dandy & Return Rolls | | 1.25 |
| Jordan | | 1.50 |
| Kiln Drive | | 1.50 |
| Mt. Hope & Paper Rolls | | 1.25 |
| Platter | | 1.50 |
| Presses (Felt & Suction) | | 1.25 |
| Pulper, Vacuum Pumps | | 1.50 |
| Reel (Surface Type) | | 1.25 |
| Screens- Chip, Rotary | | 1.50 |
| Vibrating | | 1.75 |
| Size Press | | 1.25 |
| Super Calendar | | 1.25 |
| Thickener & Washer- AC Motor | | 1.50 |
| DC Motor | | 1.25 |
| Wind & Unwind Stand | | 1.00 |
| Winders (Surface Type) | | 1.25 |
| Yankee Dryers | | 1.25 |
| PASSENGER ELEVATORS | Refer to Factory | |
| PLATE PLANERS | 1.50 | 1.75 |
| PRINTING PRESSES | Refer to Factory | |
| PUMPS | | |
| Centrifugal | 1.00 | 1.25 |
| Proportioning | 1.25 | 1.50 |
| Reciprocating | | |
| Single Act, 3 or more Cyl. | 1.25 | 1.50 |
| Double Act, 2 or more Cyl. | 1.25 | 1.50 |
| Single Act, 1 or 2 Cyl. | Refer to Factory | |
| Double Act, 1 Cyl. | Refer to Factory | |
| Rotary: Gear, Lobe, Vane | 1.00 | 1.25 |
| PUNCH PRESSES (Gear Driven) | 1.50 | 1.75 |
| RUBBER & PLASTIC INDUSTRIES | | |
| Calendars | | 1.50 |
| Crackers | | 1.75 |
| Laboratory Equipment | 1.25 | 1.50 |
| Mills (2 on line) | | 1.50 |
| Mills (3 on line) | | 1.25 |
| Mixing Mills | 1.50 | 1.50 |
| Refiners | | 1.50 |
| Sheeters | | 1.50 |
| Tire Building & Machines | Refer to Factory | |
| Tire & Tube Press Openers | Refer to Factory | |
| Tubers & Strainers | | 1.50 |
| Warming Mills | | 1.50 |
| SCREENS | | |
| Air Washing | 1.00 | 1.25 |
| Rotary-Sand or Gravel | 1.25 | 1.50 |
| Traveling Water Intake | 1.00 | 1.25 |
| SEWAGE DISPOSAL | | |
| Bar Screens | 1.00 | 1.25 |
| Chemical Feeders | 1.00 | 1.25 |
| Collectors | 1.00 | 1.25 |
| Dewatering Screens | 1.25 | 1.50 |
| Scum Breakers | 1.25 | 1.50 |
| Slow or Rapid Mixers | 1.25 | 1.50 |
| Thickeners | 1.25 | 1.50 |
| Vacuum Filters | 1.25 | 1.50 |
| SKI TOWS & LIFTS | Not approved | |
| STOKERS | 1.00 | 1.25 |
| STONE CRUSHERS | 1.50 | 1.75 |
| SUGAR INDUSTRY | | |
| Cane Knives, Crushers, Mills | | 1.50 |
| TABLE CONVEYORS (Non-Reversing) | | |
| Group Drives | 1.25 | 1.50 |
| Individual Drives | 1.50 | 1.75 |
| Reversing | Refer to Factory | |
| TEXTILE INDUSTRY | | |
| Batchers, Calendars | 1.25 | 1.50 |
| Card Machines | 1.25 | 1.50 |
| Dry Cans, Dryers | 1.25 | 1.50 |
| Dyeing Machinery | 1.25 | 1.50 |
| Knitting Machinery | Refer to Factory | |
| Looms, Mangles, Nappers, Pads | 1.25 | 1.50 |
| Range Drives | Refer to Factory | |
| Slashers, Soapers, Spinners | 1.25 | 1.50 |
| Tenter Frames, Washers, Winders | 1.25 | 1.50 |
| TUMBLING BARRELS | 1.50 | 1.75 |
| VANE BLOWERS | 1.00 | 1.25 |
| WINDLASS | Refer to Factory | |
| WIRE | | |
| Drawing Machines | 1.25 | 1.50 |
| Winding Machines | 1.25 | 1.50 |

## Torque and Horsepower

The feature that distinguishes torque (TQ) from horsepower (HP) is that torque is independent of speed or time while horsepower is a function of velocity which in turn is a factor of both radius and speed of rotation. With this in mind, there are several useful formulas that express this relationship.

$$\textbf{HP} = \frac{\text{TQ x Speed (RPM)}}{63025}$$

$$\textbf{TQ} = \frac{\text{HP x 63025}}{\text{RPM}}$$

### Efficiency

The efficiency of a Worm Gear Speed Reducer is dependent on input speed, lead angle of the worm, type of lubricant, temperature and many other variables. The efficiency for speed reducer can be easily calculated as follows.

$$\textbf{Efficiency} = \frac{\text{Output HP}}{\text{Input HP}}$$

## Overhung Load

Overhung load is the radial force exerted on a shaft at some position along its extension. The overhung load is usually imposed by either a sprocket, pinion, sheave, or pulley. When one of these items is mounted on the output shaft of the reducer, a calculation should be made to determine whether the resulting overhung load exceeds the reducers rated overhung load capacity.

$$\textbf{OHL} = \frac{\text{Output Torque x Overhung Load Factor}}{\text{Radius (of Sprocket, Pinion, Sheave or Pulley)}}$$

### Overhung Load Factor

| | |
|---|---|
| Sprocket | 1.00 |
| Gear Pinion | 1.25 |
| V Belt Sheave or Pulley | 1.50 |
| Flat Belt | 2.50 |

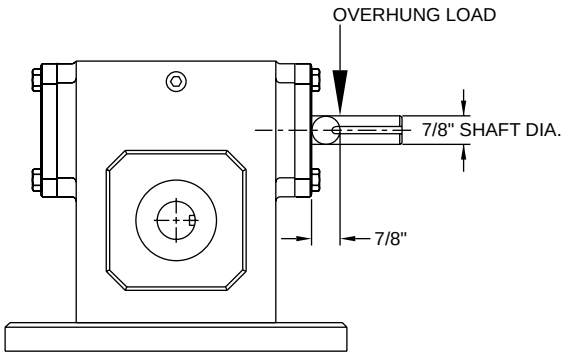


*Note: The Overhung load ratings in the catalog are calculated at one shaft diameter out from the gear case housing.*

# Instructions Manual

## Selection Information

Read ALL instructions prior to operating reducer. Injury to personnel or reducer failure may be caused by improper installation, maintenance or operation.

Written authorization from Grove Gear is required to operate or use reducers in man lift or people moving devices.

Check to make certain application does not exceed the allowable load capacities published in the current catalog.

Buyer shall be solely responsible for determining the adequacy of the product for any and all uses to which buyer shall apply the product. The application by buyer shall not be subject to any implied warranty of fitness for a particular purpose.

## Safety Alert

**WARNING** For safety, Buyer or User should provide protective guards over all shaft extensions and any moving apparatus mounted thereon. The User is responsible for checking all applicable safety codes in his area and providing suitable guards. Failure to do so may result in bodily injury and/or damage to equipment.

**WARNING** Hot oil or reducers can cause severe burns. Use extreme care when removing lubrication plugs and vents.

**WARNING** Make certain that the power supply is disconnected before attempting to service or remove any components. Lock out the power supply and tag it to prevent unexpected application of power.

**WARNING** Reducers are not to be considered fail safe or self-locking devices. If these features are required, a properly sized, independent holding device should be utilized. Reducers should not be used as a brake.

**WARNING** Any brakes that are used in conjunction with a reducer must be sized or positioned in such a way so as to not subject the reducer to loads beyond the catalog rating.

**CAUTION** Test run unit to verify operation. If the unit tested is a prototype, that unit must be of current production.

**CAUTION** If the speed reducer cannot be located in a clear and dry area with access to adequate cooling air supply, then precautions must be taken to avoid the ingestion of contaminants such as water and the reduction in cooling ability due to exterior contaminants. Reducers located in confined spaces may require forced air cooling.

## Important Information

In the event of the resale of any of the goods, in whatever form, Resellers/Buyers will include the following language in a conspicuous place and in a conspicuous manner in a written agreement covering such sale:

> *The manufacturer makes no warranties or representations, express or implied, by operation of law or otherwise, as to the merchantability or fitness for a particular purpose of the goods sold hereunder. Buyer acknowledges that it alone has determined that the goods purchased hereunder will suitably meet the requirements of their intended use. In no event will manufacturer be liable for consequential, incidental or other damages.*

Resellers/Buyers agree to also include this entire document including the warnings and cautions above in a conspicuous place and in a conspicuous manner in writing to instruct users on the safe usage of the product.

This instructions manual should be read together with all other printed information such as catalogs, supplied by Grove Gear.

## General Operation

1. Run the motor which drives the reducer and check the direction of reducer output rotation. Consult motor nameplate for instructions to reverse the direction of rotation.

2. Attaching the load: On direct coupled installations, check shaft and coupling alignment between speed reducer and loading mechanism. On chain/sprocket and belt/pulley installation, locate the sprocket or pulley as close to the oil seal as possible to minimize overhung load. Check to verify that the overhung load does not exceed specifications published in the catalog.

3. High momentum loads: If coasting to a stop is undesirable, a braking mechanism should be provided to the speed reducer output or the driven mechanism.

**CAUTION** The system of connected rotating parts must be free from critical speed, torsional or other type vibration, no matter how induced. The responsibility for this system analysis lies with the purchaser of the speed reducer.

## Installation

1. Mount the unit to a rigid flat surface using grade 5 or higher fasteners. The mounting fasteners should be the largest standard size that will fit in the base mounting hole. Shim as required under flange or base feet which do not lie flat against the mounting surface.

2. For shipment, pipe plugs are installed in the unit and a vent plug is packed separately. After mounting the unit in position, remove the appropriate pipe plug and install the vent plug in the location shown on page 166. On double reduction units both the primary and the secondary must be vented. Failure to vent the unit can cause premature seal wear or loss of seal and oil. These conditions are not covered by warranty. Check for correct oil level. Contact the factory for level and vent recommendations on non-standard mounting positions. Units with optional internal pressure compensating system do not use vents. See (internal pressure compensating system) under **Lubrication** for further information.

3. Connect motor to speed reducer.

**WARNING** Depending upon gear geometry and operating conditions worm gear reducers may or may not backdrive. Special consideration should be given to high inertia loads connected to the output shaft. Consult the factory for further details.

**CAUTION** DO NOT CHANGE MOUNTING POSITIONS WITHOUT CONTACTING FACTORY. Altering the mounting position may require special lubrication provisions which must be factory installed.

**CAUTION** Do not operate the reducer without making sure it contains the correct amount of oil. Do not overfill or underfill with oil, or injury to personnel, reducer or other equipment may result.

**CAUTION** A unit cannot be used as an integral part of a machine superstructure which would impose additional loads on the unit other than those imposed by the torque being transmitted either through a shaft-mounted arrangement, and any shaft mounted power transmitting device. *(e.g. sprockets, pulleys, couplings)*

**CAUTION** For safe operation and to maintain the unit warranty, when changing a factory installed fastener for any reason, it becomes the responsibility of the person making the change to properly account for fastener grade, thread engagement, load, tightening torque and the means of torque retention.

## Lubrication

With the exception of unit sizes 2700, 2800 and 21000 which are shipped dry, all standard reducers ordered from the factory are filled with lubricant for continuous operation within a 30° to100°F ambient temperature range (for intermittent duty below 60°F, contact factory). Double and triple reduction units have separate oil sumps and must be filled/checked independently. Prior to startup, verify that the oil is at the level shown on the drawings on page 168. If the ambient temperature will be outside the range for the lubricant installed at the factory, drain and refill the reducer with the proper viscosity lubricant prior to use. Consult the chart on page 179 or the factory for alternate lubricants.

**Change Intervals:** Standard compounded lubricants should be changed every six months or 2500 operating hours, whichever comes first. Factory installed synthetic lubricants should be changed every four years or 11,000 hours, whichever comes first.

**Internal pressure compensating system:** Grove Gold and stainless steel reducers come standard with an internal pressure compensating system and synthetic oil pre-installed at the factory. It is not necessary to vent these reducers, and they can be used as supplied from the factory.

CAUTION Oil should be changed more often if reducer is used in a severe environment. *(i.e. dusty, humid)*

CAUTION In the Food and Drug Industry (including animal food), consult the lubrication supplier for recommendation of lubricants which are acceptable to the Food and Drug Administration and/or other authoritative bodies having jurisdiction. Factory supplied oil is not suitable for these applications or this industry.

### Special Lubrication Requirements - Sizes 218 & Larger

Units shipped from the factory are assembled to properly lubricate all internal components based on a specific assumed mounting orientation. The factory assumed mounting orientations are given below. If a size 218 or larger unit will be mounted in a different orientation than listed below, or run with sustained input speeds less than 900 RPM, it should be specified with the order. The unit can then be modified to assure proper lubrication.

| Factory Assumed Mounting Orientation | Applicable Unit Styles* | |
|---|---|---|
| Worm Over | B, T, F, H, FH, C, | Single Reduction |
| | D, DT, DF, DH, DFH | Double Reduction Worm-Worm |
| | DX, DXT, DXH, DXFH, | Double Reduction Helical-Worm |
| | TT | Triple Reduction Worm-Worm-Worm |
| Worm Under | U | Single Reduction |
| | DU | Double Reduction Worm-Worm |
| Vertical Output | VL/VH, FE | Single Reduction |
| | DVL/DVH, DFE | Double Reduction Worm-Worm |
| | DXVL/DXVH, DXFE | Double Reduction Helical-Worm |
| Vertical Input | J | Single Reduction |
| | DJ | Double Reduction Worm-Worm |
| | DXJ | Double Reduction Helical-Worm |

** Includes "M" and "MQ" versions of all styles listed*

The precision-made gears and bearings in Grove Gear Speed Reducers require high-grade lubricants of the proper viscosity to maintain trouble-free performance. For best results, use lubricants on the following chart for worm gear reducers:

| Manufacturer | 30° to 100° F Ambient Temperature◆ AGMA Compounded No. 7 | 50° to 125° F Ambient Temperature◆ AGMA Compounded No. 8 |
|---|---|---|
| Amoco Oil Co. | Worm Gear Oil | Cylinder Oil #680 |
| Chevron USA, Inc. | Cylinder Oil #460X | Cylinder Oil #680X |
| Exxon Co. USA | Cylesstic TK-460 | Cylesstic TK-680 |
| Gulf Oil Co. | Senate 460 | Senate 680D |
| Mobil Oil Corp. | 600 W Super Cylinder | Extra Hecla Super |
| Shell Oil Co. | Valvata Oil J460 | Valvata Oil J680 |
| Sun Oil Co. | Gear Oil 7C | Gear Oil 8C |
| Texaco | Honor Cylinder Oil | 650T Cylinder Oil |
| Union Oil Co. of CA | Steaval A | Worm Gear Lube 140 |

Standard factory-installed lubricant, shipped with 6.00" C.D. and smaller units.

Some gear lubricants contain E.P. additives that can be corrosive to gear bronze. Avoid lubricants that are compounded with sulfur and/or chlorine.

For temperature ranges not shown and/or intermittent duty, contact factory.

For lubrication requirements of helical reducers (primaries of helical/worm reducers, ratio multipliers, and styles BAMCQ, BAMC, and BA), contact factory.

## Oil Capacities (pints)

| Mounting Position | UNIT SIZE | | | | | | | | | | | | | |
|---|---|---|---|---|---|---|---|---|---|---|---|---|---|---|
| | 213 | 215 | 217 | 220 | 224 | 226 | 230 | 232 | 242 | 252 | 2600 | 2700* | 2800* | 21000* |
| Worm Over | 1/4 | 3/4 | 3/4 | 1 1/4 | 1 1/2 | 2 1/2 | 3 1/2 | 4 1/2 | 7 | 11 3/4 | 19 1/2 | 35 | 48 | 72 |
| Worm Under | 1/2 | 1 | 1 1/4 | 1 3/4 | 2 1/2 | 3 3/4 | 5 1/4 | 6 3/4 | 9 1/2 | 19 | 20 1/2 | 32 3/4 | 51 1/4 | 80 |
| Vertical Output | 1/4 | 1 | 1 | 1 3/4 | 2 | 3 | 4 1/4 | 5 1/2 | 8 | 15 1/2 | 20 | 20 3/4 | 28 3/4 | 40 |
| Vertical Input | 1/4 | 1 | 1 | 1 1/2 | 2 | 3 | 4 1/2 | 5 3/4 | 8 | 15 1/2 | 20 1/3 | 36 1/2 | 50 | 75 |
| Extended Bearing | N/A | N/A | N/A | N/A | N/A | N/A | N/A | 8 | 12 | 17 | 27 | 40 | 63 | 102 |
| Worm over on Secondary Unit of Double Reduction | | | | N/A | N/A | N/A | N/A | 12 | 19 1/4 | 20 | 30 1/3 | 50 1/3 | 71 1/2 | 107 1/4 |

*Shipped Dry

16 oz. = 1 pint
2 pints = 1 quart
4 quarts = 1 gallon
1 gallon = 128 oz. = 231 cu. in.

Always check for proper oil level after filling. Capacities vary somewhat with model and mounting position. Oil should rise to bottom edge of level hole. Do not overfill.

## Synthetic Lubricants

Synthetic lubricants provide the potential for numerous benefits including wider operating temperature range and increased interval between changes. Use of synthetics can cause problems if they are not compatible with the seals or the conventional lubricants they replace. For normal ambient temperatures (-10°F to 105°F)◆ we recommend the use of Mobil SHC 634 which is compatible with the standard compounded oil shipped in our product and the Viton® seal material used through size 252. For other temperatures, contact factory for a recommendation.

For synthetic lubrication to be used in helical reducers (primaries of helical/worm reducers, ratio multipliers, and styles BAMCQ, BAMC, and BA), contact factory.

**◆ Temperature range for continuous duty. For intermittent duty, contact factory.**

# Engineering Data

## Instructions Manual

### Standard Speed Reducer Mounting Positions & Vent Plug, Level and Drain Locations

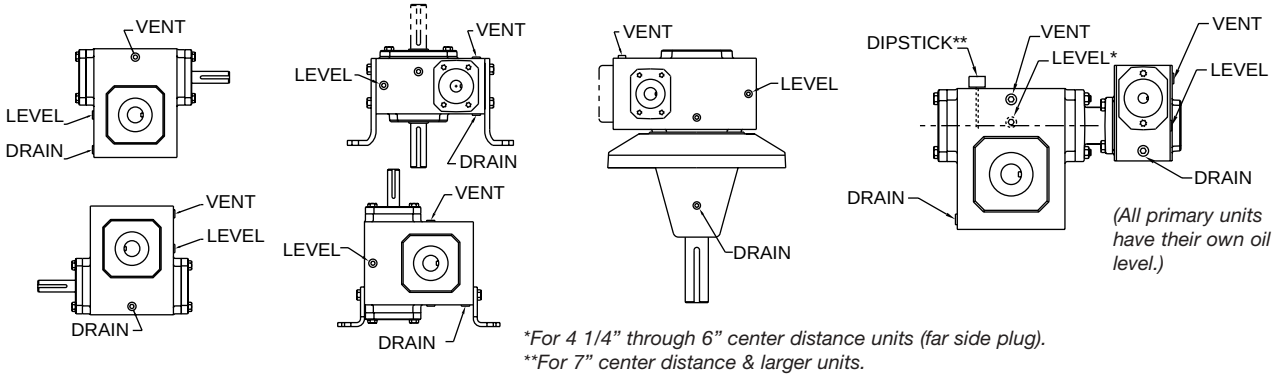


*For 4 1/4" through 6" center distance units (far side plug).
**For 7" center distance & larger units.
Note: High oil level applies to all 4 1/4" center distance & larger secondary & tertiary units regardless of primary unit type.

## Maintenance

Your Grove Gear reducer has been tested and adjusted at the factory. Dismantling or replacement of components must be done by Grove Gear to maintain the warranty.

Frequently check the oil level of the reducer. If oil level is low, (refer to reducer vent and level position chart) add proper lubrication through the filler plug until it comes out the oil level plug.

Inspect vent plug often to insure it is clean and operating.

**CAUTION** Mounting bolts should be routinely checked to ensure that the unit is firmly anchored for proper operation.

Seals: The Grove Gear line of speed reducers utilize premium quality seals which are the state-of-the-art in sealing technology. Seals are, however, a wear item and eventually need to be replaced. Replacement can be easily accomplished by following the steps below:

1. Remove the worn seal without damaging the shaft surface or the seal bore. This can be done by drilling a .062 diameter hole in the seal casing (being careful not to drill into the bearing behind the seal). Screw a #10 sheet metal screw into the hole and pry out the seal.
2. Clean the seal bore of sealant.
3. Before installing the new seal, use electrical tape to cover any keyways on the shaft to prevent seal lip damage.
4. Grease the seal lips with bearing grease and apply a sealant to the seal bore.
5. Slide the seal into the shaft being careful not to fold the inner lip over on any shaft steps.
6. Press the seal into its bore with a sleeve that presses on the seal casing, being careful to keep the seal square in its bore.

## Class of Service

All capacity ratings are based on American Gear Manufacturers Association (AGMA) Standards. Load conditions be within cataloged ratings published in the current Grove Gear Catalog (available upon request).

**Warranty From Grove Gear** - See catalog pages 192-195 for warranty terms and conditions.

# Parts List Index


| Style | Page |
|---|---|
| **Single Reduction Parts List** | 182 - 184 |
| **Double Reduction Worm/Worm Parts List** | |
| Primary Unit | 185 |
| Secondary Unit | 182 - 184 |
| **Double Reduction Helical/Worm Parts List** | |
| Primary Unit | 187 |
| Secondary Unit | 182 - 184 |
| **Triple Reduction Worm/Worm/Worm Parts List** | |
| Primary Unit | 185 |
| Secondary Unit | 186 |
| Tertiary Unit | 182 -184 |

# Engineering Data

## Single Reduction Parts List

**Item # Description**

### Basic Single Reduction Unit

1. Gear Housing
2. Pipe Plug
3. Vent Plug
4. Splash Guard
5. Input Cover
6. O-Ring
7. Hex Head Cap Screw
8. Input Oil Seal
9. Input Bearing
10. Input Bearing
*11. Retaining Screw
12. Input Shaft
13. Output Cover
14. Output Cover
15. O-Ring
16. Output Cover Gasket (as required)
17. Output Oil Seal
18. Output Bearing
19. Hex Head Cap Screw
***20. Single Output Shaft
***21. Double Output Shaft
22. Gear Spacer
23. Gear Key (only used on size 2-5/8" center distance and larger units)
24. Output Gear (supplied only as output assembly on size 1-1/3" through 2-3/8" center distance units)
25. Input Cover (only used on size 4-1/4" center distance and larger units)
26. Input Cover
27. Input Oil Seal
*28. Retaining Ring - Shaft
29. Double Input Shaft
170. Internal Pressure Compensation Chamber (optional)
171. Internal Pressure Compensation Chamber Stem Plug
172. Internal Pressure Compensation Chamber Stem Nut

**not used on 4-1/4" center distance and larger units*

### Quill Motor Flange Unit

30. Double Input Shaft
40. Quill Motor Flange
41. Input Oil Seal
42. Hex Head Cap Screw
43. Retaining Ring - Shaft
44. Retaining Ring - Housing (only used on size 4-1/4" center distance and larger units)
45. Quill Input Shaft

### Hollow Output Shaft Unit

50. Gear Housing
51. Output Cover
52. Output Oil Seal
53. Output Bearing
54. Gear Spacer
***55. Output Shaft
56. Setscrew
57. Gear Key (only used on size 2-5/8" center distance

**Item # Description**

58. Output Gear (supplied only as output assembly on size 1- 1/3" through 2-3/8" center distance units)

### Mounting Bracket Options

70. Horizontal Mounting Foot
71. Cap Screw
72. High and Low Riser Bracket
73. Hex Head Cap Screw
74. "J" Mount Bracket
75. Output Flange
76. Machine Faced Output Cover (only used on size 2-3/8" center distance and larger solid output shaft units)
77. Hex Head Cap Screw
78. Torque Bracket
79. Hex Head Cap Screw

### Extended Bearing Unit

90. Flange
91. Output Shaft
92. Bearing
93. Output Oil Seal
94. Hex Head Cap Screw
95. Pipe Plug
96. Expansion Plug
*97. Flange Cover
*98. Gasket
*99. Hex Head Cap Screw

**only used on size 5-1/4" center distance and larger units*

### Long Motor Flange and Coupling Kit

110. "C" Face Motor Flange
111. Hex Head Cap Screw
112. Coupling Key - Reducer Shaft
113. Setscrew - Reducer Shaft
114. Coupling Gear - Reducer Shaft
115. Coupling Sleeve
116. Setscrew - Motor Shaft
117. Coupling Gear - Motor Shaft
118. Coupling Key - Motor Shaft

### Vertical Shaft Required Parts (Supplied only when mounting position involves a vertical shaft.)

*129. Output Cover
*130. Output Cover
*131. Output Bearing Grease Retainer
132. Grease Fitting
133. Sealed Ball Bearing (only used on size 1-3/4" through 2-5/8" center distance units)
**134. Input Cover
**136. Input Bearing Grease Retainer

** Only used on size 4-1/4" center distance and larger units.*
*** Only used on size 3" center distance and larger units.*
**** Supplied only as output assembly on size 1-1/3" through 2-3/8" center distance units.*

## Basic Single Reduction Unit

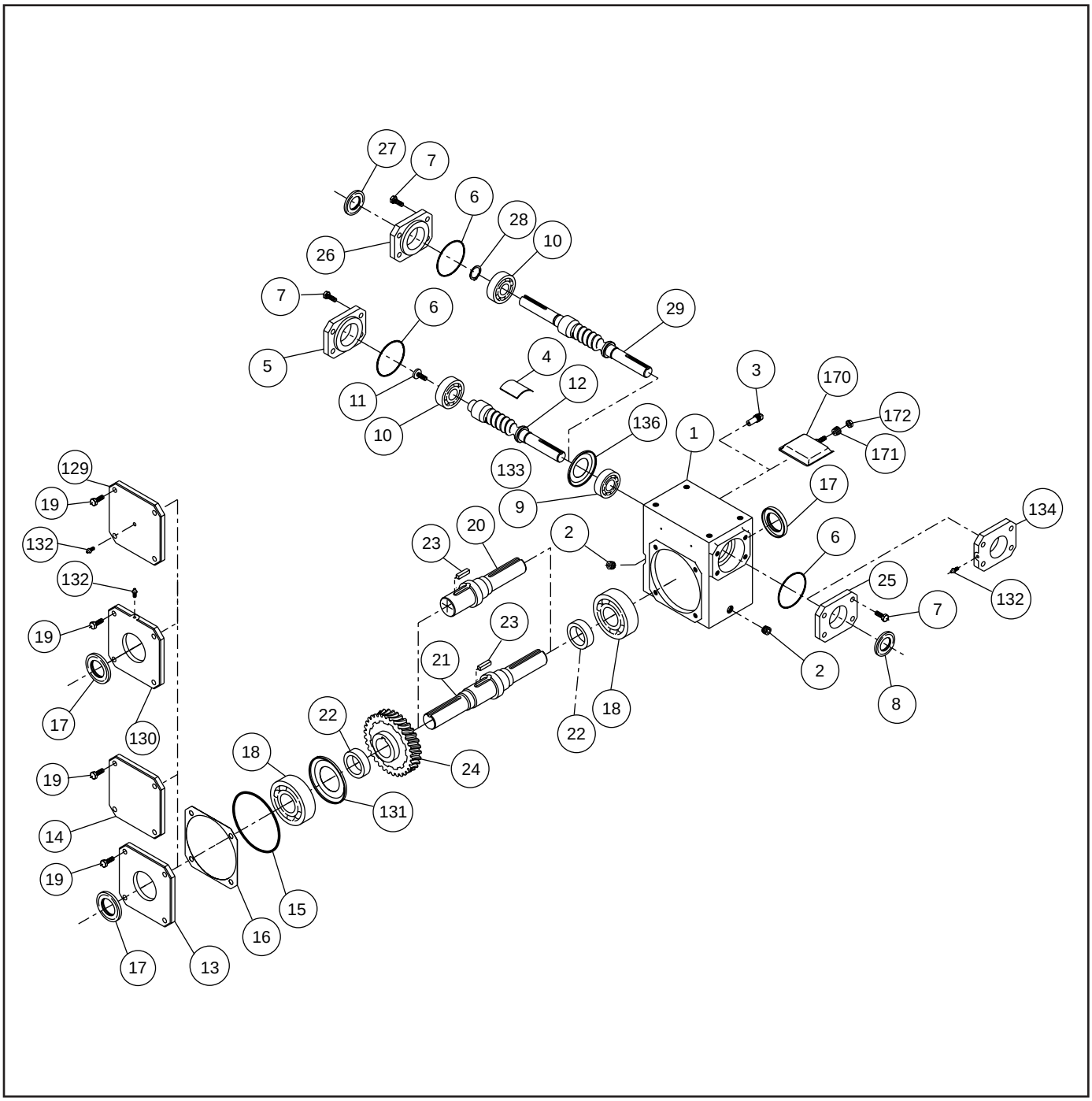

# Engineering Data

## Multiple Parts List

### Hollow Output Shaft Unit

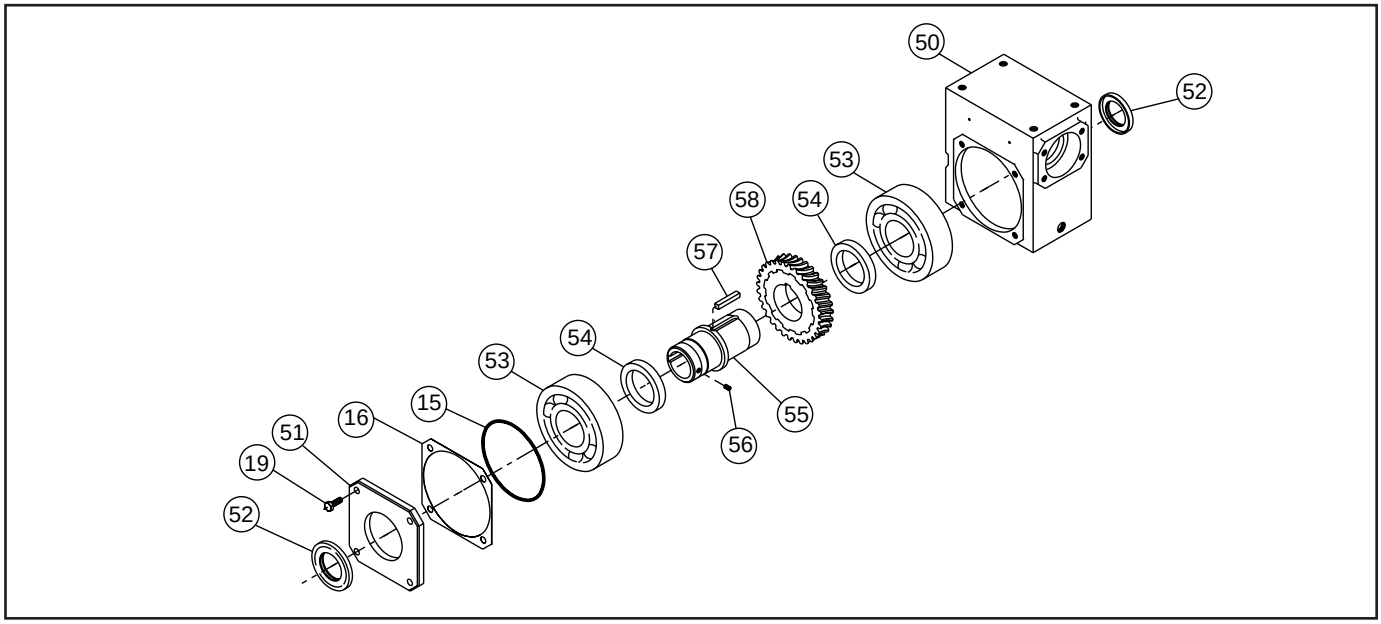


### Quill Motor Flange Unit

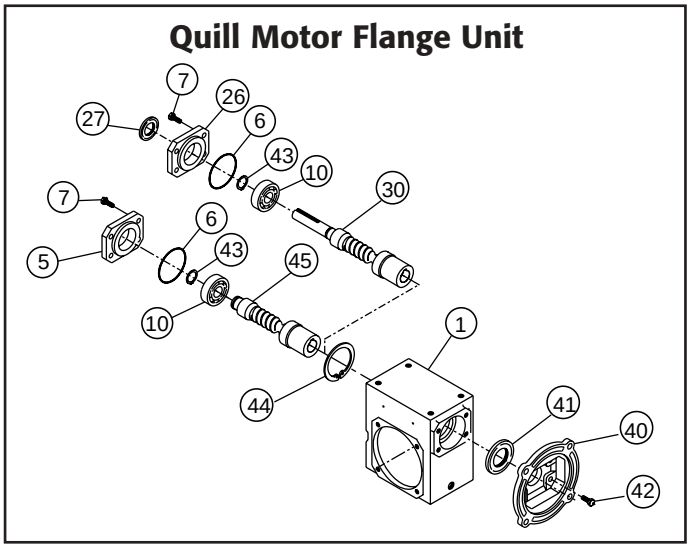


### Extended Bearing Unit

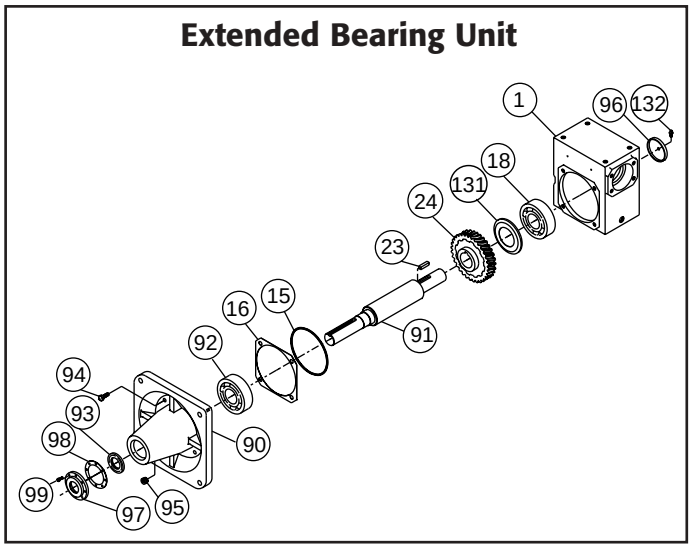


### Mounting Bracket Options

Hollow units only on part numbers 78 and 79.

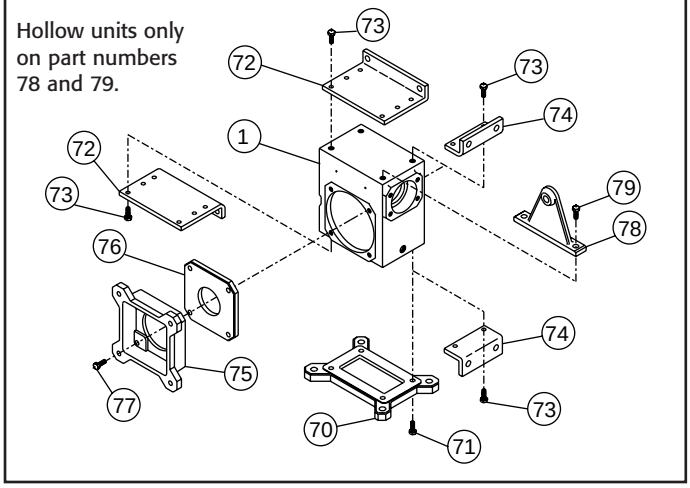


### Long Motor Flange & Coupling Kit

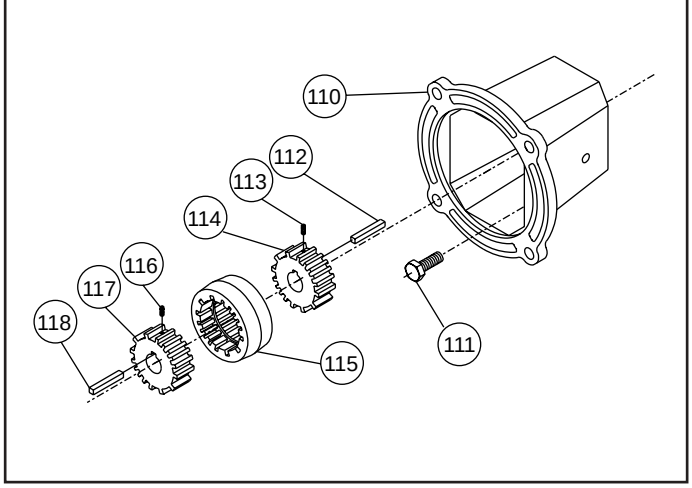

## Parts List

# Primary Unit for Double Reduction Worm/Worm Styles & Triple Reduction Worm/Worm/Worm Styles

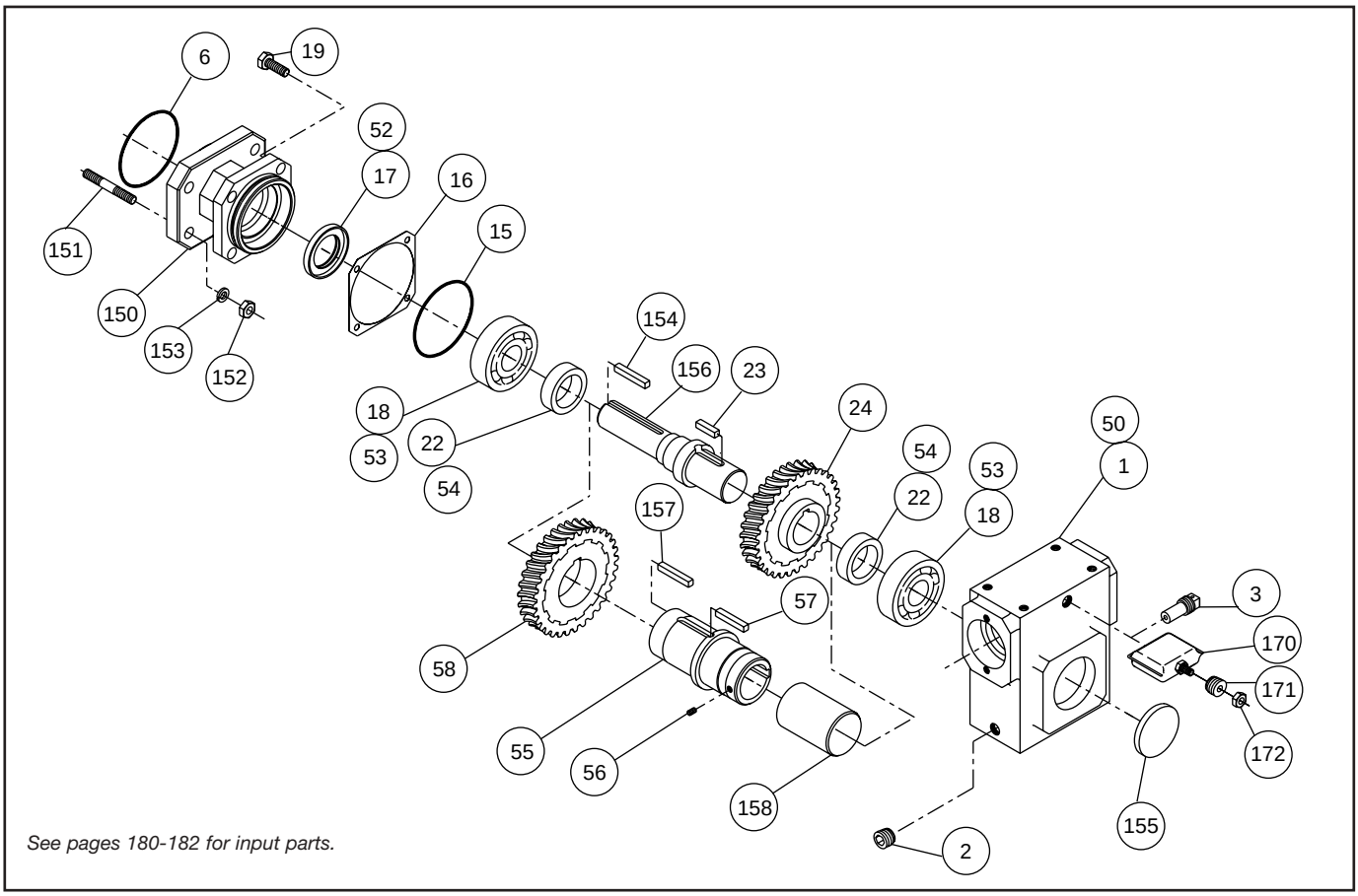


| Item # | Description |
|---|---|
| 1. | Gear Housing |
| 2. | Pipe Plug |
| 3. | Vent Plug |
| 6. | O-Ring |
| 15. | O-Ring |
| 16. | Output Cover Gasket (as required) |
| 17. | Output Oil Seal |
| 18. | Output Bearing |
| 19. | Hex Head Cap Screw |
| 22. | Gear Spacer |
| 23. | Gear Key (only used on size 2-5/8" center distance and larger primary units) |
| 24. | Output Gear (supplied only as output assembly on size 1-1/3" through 2-3/8" center distance primary units) |
| *50. | Gear Housing |
| *52. | Output Oil Seal |
| *53. | Output Bearing |
| *54. | Gear Spacer |

| Item # | Description |
|---|---|
| **55. | Output Shaft |
| *56. | Setscrew |
| *57. | Gear Key (only used on size 2-5/8" center distance and larger primary units) |
| *58. | Output Gear (supplied only as output assembly on size 1-1/3" through 2-3/8" center distance primary units) |
| 150. | Double Reduction Adaptor |
| 151. | Stud |
| 152. | Hex Nut |
| 153. | Lock Washer |
| 154. | Primary Solid Output Key |
| 155. | Expansion Plug |
| 156. | Primary Solid Output Shaft |
| *157. | Primary Hollow Output Key |
| *158. | Hollow Shaft Plug |
| 170. | Internal Pressure Compensation Chamber (optional) |
| 171. | Internal Pressure Compensation Chamber Stem Plug |
| 172. | Internal Pressure Compensation Chamber Stem Nut |

** Only used on size 7", 8", and 10" center distance secondary units for double reduction worm/worm styles.*

# Engineering Data

## Parts List

### Secondary Unit For Triple Reduction Worm / Worm / Worm Styles

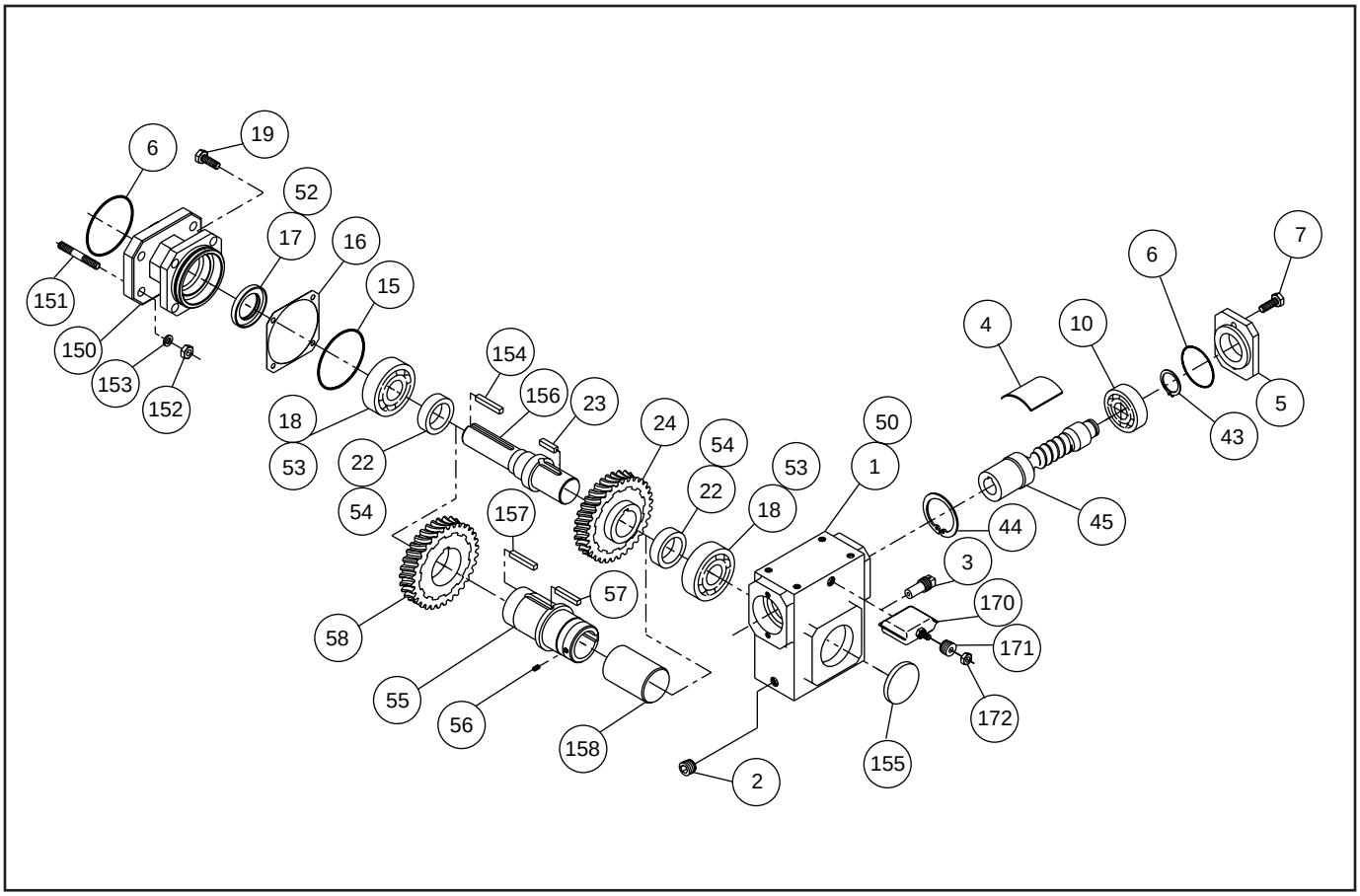


| Item # | Description |
|---|---|
| 1. | Gear Housing |
| 2. | Pipe Plug |
| 3. | Vent Plug |
| 6. | O-Ring |
| 15. | O-Ring |
| 16. | Output Cover Gasket (as required) |
| 17. | Output Oil Seal |
| 18. | Output Bearing |
| 19. | Hex Head Cap Screw |
| 22. | Gear Spacer |
| 23. | Gear Key (only used on size 2-5/8" center distance and larger secondary units) |
| 24. | Output Gear (supplied only as output assembly on size 1-1/3" through 2-3/8" center distance secondary units) |
| *50. | Gear Housing |
| *52. | Output Oil Seal |
| *53. | Output Bearing |
| *54. | Gear Spacer |

| Item # | Description |
|---|---|
| *55. | Output Shaft |
| *56. | Setscrew |
| *57. | Gear Key (only used on size 2-5/8" center distance and larger secondary units) |
| *58. | Output Gear (supplied only as output asssembly on size 1-1/3" through 2-3/8" center distance secondary units) |
| 150. | Triple Reduction Adaptor |
| 151. | Stud |
| 152. | Hex Nut |
| 153. | Lock Washer |
| 154. | Secondary Solid Output Key |
| 155. | Expansion Plug |
| **156. | Secondary Solid Output Shaft |
| *157. | Secondary Hollow Output Key |
| *158. | Hollow Shaft Plug |
| 170. | Internal Pressure Compensation Chamber (optional) |
| 171. | Internal Pressure Compensation Chamber Stem Plug |
| 172. | Internal Pressure Compensation Chamber Stem Nut |

** Only used on size 7", 8", and 10" center distance tertiary units for triple reduction worm/worm/worm styles.*
***Supplied only as output assembly on size 1-1/3" through 2-3/8" center distance units.*

# Parts List

## Helical Primary

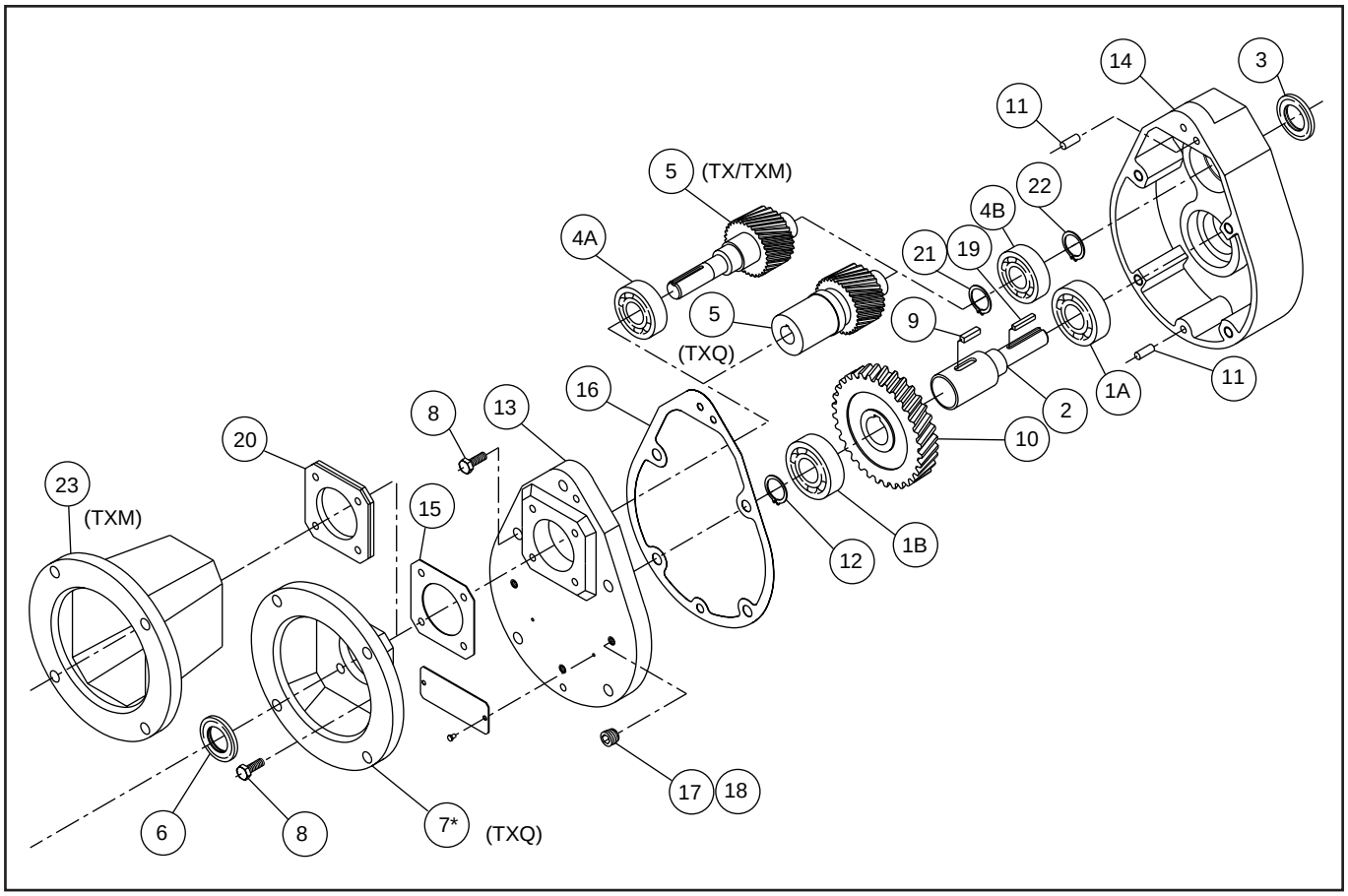


| Item # | Description |
|---|---|
| 1A. | Bearing, Output (Ball) — Extension End |
| 1B. | Bearing, Output (Ball) — Inboard End |
| 2. | Shaft, Output (state output frame size) |
| 3. | Seal, Oil (Output) |
| 4A. | Bearing, Input (Ball) — Extension End (N/A for TXQ) |
| 4B. | Bearing, Input (Ball) — Inboard End |
| 5. | Shaft, Input (state ratio); on TXQ also state frame size. |
| 6. | Seal, Oil (Input) |
| *7. | Flange, Motor (TXQ only) |
| 8. | Screw — 8 req. on Model I & II; 11 req. on Model III |
| 9. | Key, Gear |
| 10. | Gear, Output (state ratio) |

| Item # | Description |
|---|---|
| 11. | Pin, Dowel — 2 req. |
| 12. | Spacer, Low Speed — 2 req. |
| 13. | Cover, Housing |
| 14. | Housing, Gear |
| 15. | Gasket, Input Cover |
| 16. | Gasket, Housing |
| 17. | Plug, Pipe — 2 req. |
| 18. | Plug, Vent |
| 19. | Key, Output Shaft |
| 20. | Cover, Input, Seal Retainer |
| 21. | Ring, Retaining, Internal, Input Shaft |
| 22. | Ring, Retaining, External, Input Shaft |
| 23. | Flange, Motor (TXM only) |

**Motor Flange replaces input cover on 'TXQ' Model.*

*Include the complete model description and serial number of the reducer when ordering replacement parts.*

# Ratio Multiplier

## Helical Gear Reducers

### Ratio Multipliers
### Styles TX, TXQ, & TXM

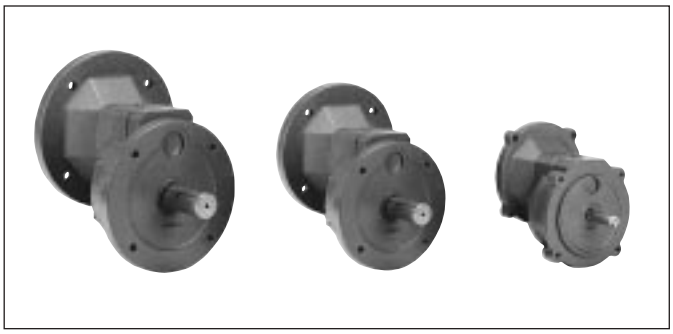

- Increases Torque and Efficiency as a Primary Drive
- Ratings to 20 Horsepower
- Double Lip Seals
- Factory Filled with Lubricant – Ready to Use
- Easy to Install/Maintain – Mounts in Any Position
- Will Accept any C-Face Motor
- Will Bolt to any C-Face Reducer
- Increases inventory flexibility
- Increases profit power

#### ORDERING DATA

TXQ 2–3–56C–56C

**Model Description**
- TX Solid I.P. Shaft
- TXQ Quill "C" Flange I.P.
- TXM Flexible, Coupled "C" Flange input

**Unit Size**
1; 2; 3

**Ratio**
2:1; 3:1; 4:1; 5:1, 7.5:1

**Motor Size**
48CZ; 56C; 140TC; 180TC; 210TC, 250TC

**Output "C" Face Size**
56C; 140TC; 180TC

#### Oil & Weight Specifications

| | | |
|---|---|---|
| Oil Type | AGMA #4 | |
| Oil Capacity | Size 1<br>Size 2<br>Size 3 | 5/8 Pint<br>7/8 Pint<br>1 Pint |
| Weight | Size 1<br>Size 2<br>Size 3 | 19 Lbs.<br>22 Lbs.<br>45 Lbs. |

### Footed Reducers
### Styles TBX, TBXQ, & TBXM

- Increases output torque
- Ratings up to 20 Horsepower
- 5 Ratios available
- Double Lip Seals
- Anti-Friction Bearings
- Factory Filled with Lubricant – Ready to Use
- Will Accept any C-Face Motor

#### ORDERING DATA

TBXQ 2–5–56C

**Model Description**
- TBX Footed with Solid I.P. Shaft
- TBXQ Footed with Quill "C" Flange I. P.
- TBXM Footed with Flexible Coupled "C" Flange I.P.

**Unit Size**
1; 2; 3

**Ratio**
2:1; 3:1; 4:1; 5:1, 7.5:1

**Motor Size**
48CZ; 56C; 140TC; 180TC; 210TC, 250TC

#### Oil & Weight Specifications

| | | |
|---|---|---|
| Oil Type | AGMA #4 | |
| Oil Capacity | Size 1<br>Size 2<br>Size 3 | 5/8 Pint<br>7/8 Pint<br>1 Pint |
| Weight | Size 1<br>Size 2<br>Size 3 | 27 3/4 Lbs.<br>30 3/4 Lbs.<br>59 Lbs. |

# Ratio Multiplier

## Rating Table

### TX1 Ratings @ 1750 R.P.M. Input (48, 56)

| Ratio | Qty. Teeth | | Output R.P.M. | Input H.P. | Output H.P | Output Torque | Max. LS OHL |
|---|---|---|---|---|---|---|---|
| 7.462 | 97 | 13 | 235 | 0.75 | 0.73 | 196 | 300 |
| 5.111 | 92 | 18 | 342 | 1.03 | 1.01 | 186 | 300 |
| 4.000 | 88 | 22 | 438 | 1.20 | 1.18 | 170 | 300 |
| 2.929 | 82 | 28 | 598 | 1.43 | 1.41 | 148 | 265 |
| 2.056 | 74 | 36 | 851 | 2.01 | 1.97 | 146 | 222 |

### TX2 Ratings @ 1750 R.P.M. Input (56, 140)

| Ratio | Qty. Teeth | | Output R.P.M. | 56C Output | | | | 140TC Output | | | |
|---|---|---|---|---|---|---|---|---|---|---|---|
| | | | | Input H.P | Output H.P. | Output Torque | Max. LS OHL | Input H.P. | Output H.P. | Output Torque | Max. LS OHL |
| 7.182 | 79 | 11 | 244 | 2.62 | 2.57 | 664 | 375 | 2.62 | 2.57 | 664 | 455 |
| 5.000 | 75 | 15 | 350 | 3.00 | 2.94 | 529 | 375 | 3.00 | 2.94 | 529 | 455 |
| 4.000 | 72 | 18 | 438 | 3.63 | 3.55 | 511 | 375 | 3.63 | 3.55 | 511 | 455 |
| 2.913 | 67 | 23 | 601 | 4.21 | 4.13 | 433 | 375 | 4.21 | 4.13 | 433 | 434 |
| 2.000 | 60 | 30 | 875 | 6.00 | 5.88 | 424 | 358 | 6.00 | 5.88 | 424 | 358 |

**TX2 OHL rating may be increased 30% for 140TC using enhanced output bearings*

### TX3 Ratings @ 1750 R.P.M. Input (180, 210, 250)

| Ratio | Qty. Teeth | | Output R.P.M. | Input H.P. | Output H.P | Output Torque | Max. LS OHL |
|---|---|---|---|---|---|---|---|
| 7.538 | 98 | 13 | 232 | 5.80 | 5.69 | 1544 | 900 |
| 5.167 | 93 | 18 | 339 | 10.07 | 9.87 | 1836 | 900 |
| 4.045 | 89 | 22 | 433 | 11.35 | 11.13 | 1621 | 900 |
| 2.964 | 83 | 28 | 590 | 12.98 | 12.72 | 1357 | 900 |
| 2.000 | 74 | 37 | 875 | 20.00 | 19.60 | 1412 | 900 |

## Mounting Base For Ratio Multipliers

### Styles TBX, TBXQ, TBXM

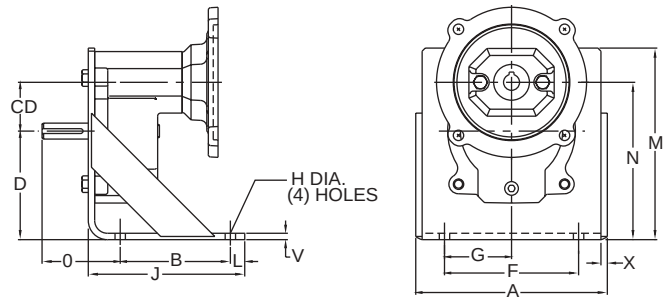


| | Output | A | B | CD | D | F | G | H | J | X | L | M | N | O | V | X |
|---|---|---|---|---|---|---|---|---|---|---|---|---|---|---|---|---|
| Size 1 | 56C | 7.50 | 6.13 | 1.909 | 4.250 | 5.25 | 2.63 | .41 | 4.31 | .25 | .56 | 7.50 | 6.16 | 3.06 | .25 | .25 |
| Size 2 | 56C<br>140TC | 7.50<br>7.50 | 6.13<br>6.13 | 2.362<br>2.362 | 4.250<br>4.250 | 5.25<br>5.25 | 2.63<br>2.63 | .41<br>.41 | 4.31<br>4.31 | .25<br>.25 | .56<br>.56 | 7.50<br>7.50 | 6.16<br>6.16 | 3.06<br>3.12 | .25<br>.25 | .25<br>.25 |
| Size 3 | 180TC<br>210TC<br>250TC | 9.50<br>9.50<br>9.50 | 7.38<br>7.38<br>7.38 | 2.874<br>2.874<br>2.874 | 5.000<br>5.000<br>5.000 | 7.00<br>7.00<br>7.00 | 3.50<br>3.50<br>3.50 | .53<br>.53<br>.53 | 5.25<br>5.25<br>5.25 | .25<br>.25<br>.25 | .63<br>.63<br>.63 | 9.44<br>9.44<br>9.44 | 7.88<br>7.88<br>7.88 | 3.88<br>4.38<br>5.00 | .25<br>.25<br>.25 | .25<br>.25<br>.25 |

# Ratio Multiplier

## Dimensions

### SIZE 1

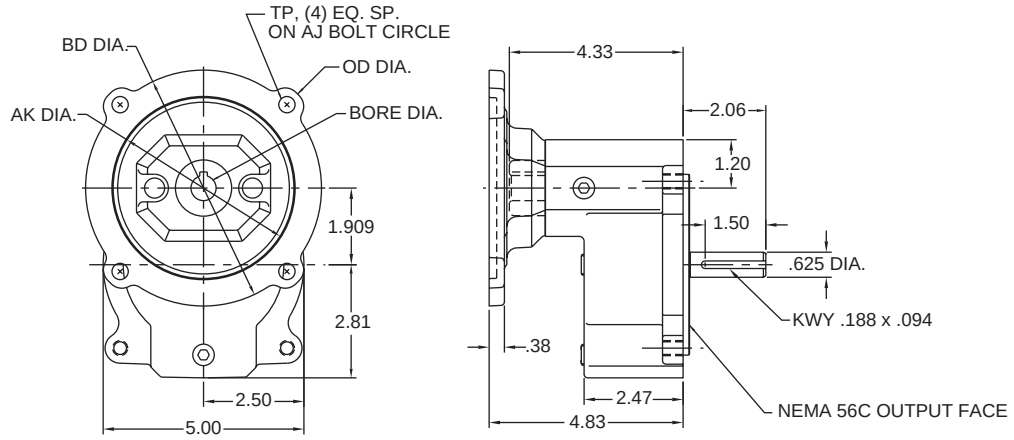


| | Input Frame | AJ | AK | BD | OD | TP | Bore | Input KWY.** |
|---|---|---|---|---|---|---|---|---|
| TXQ1 | 48C | 3.75 | 3.00 | 3.88 | 4.36 | .28 | .500 | 1/8 x 1/16 |
| | 56C | 5.88 | 4.50 | 5.88 | 6.64 | .41 | .625 | 3/16 x 3/32 |

*** keyway width by depth.*

### SIZE 2

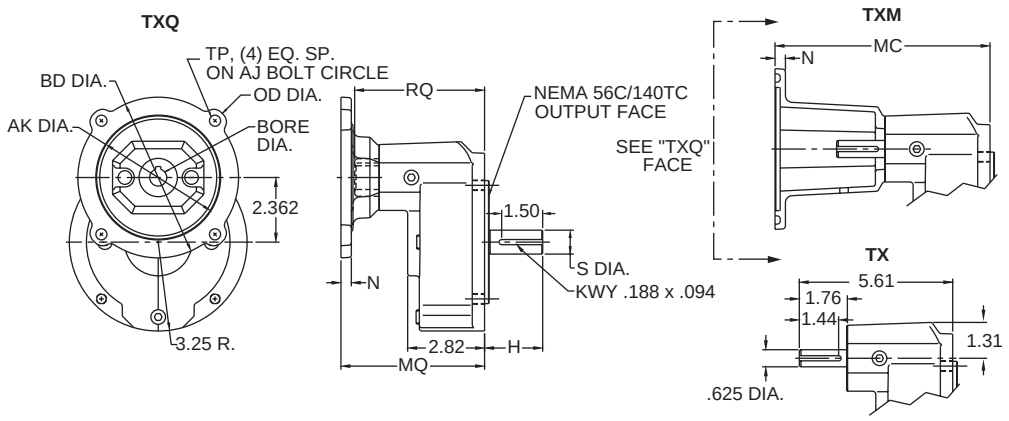


| | Input-Output Frame | AJ | AK | BD | TP | Bore | OD | MQ | N | MC | RQ | IP KWY.* | H | S Dia. | OP KWY.* |
|---|---|---|---|---|---|---|---|---|---|---|---|---|---|---|---|
| TXQ2 TXM2 TX2 | 56C-56C | 5.88 | 4.50 | 5.88 | .41 | .625 | 6.64 | 5.25 | .38 | 7.86 | 4.75 | .188 x .094 | 2.06 | .625 | .188 x .094 |
| | 56C-140TC | 5.88 | 4.50 | 5.88 | .41 | .625 | 6.64 | 5.25 | .38 | 7.86 | 4.75 | .188 x .094 | 2.13 | .875 | .188 x .094 |
| | 140TC-56C | 5.88 | 4.50 | 5.88 | .41 | .875 | 6.64 | 5.25 | .38 | 7.86 | 4.75 | .188 x .094 | 2.06 | .625 | .188 x .094 |
| | 140TC-140TC | 5.88 | 4.50 | 5.88 | .41 | .875 | 6.64 | 5.25 | .38 | 7.86 | 4.75 | .188 x .094 | 2.13 | .875 | .188 x .094 |

**keyway width by depth*

*Note: All dimensions are for reference only. Contact factory for certified dimensions.*

CAUTION *For safety, purchaser or user should provide protective guards over shaft extensions and any couplings, sheaves and belts, sprockets and chains etc., mounted thereon.*

# Ratio Multiplier

## Dimensions

### SIZE 3

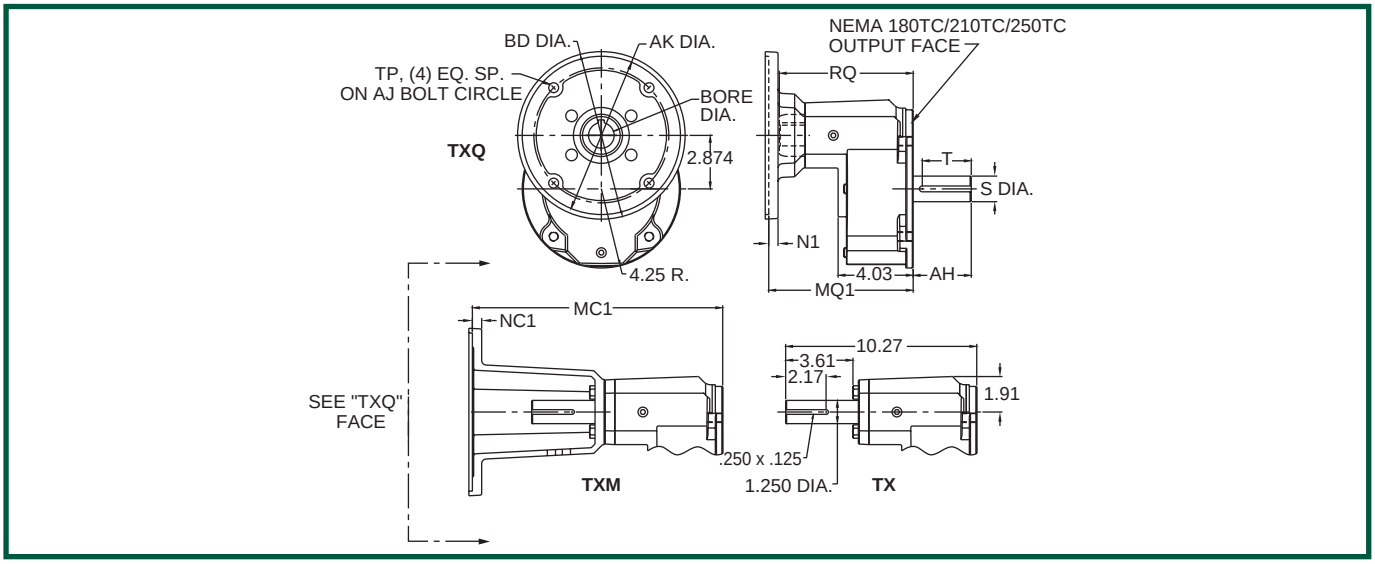


| | Input-Output Frame** | AJ | AK | BD | TP | Bore | MQ1 | N1 | MC1 | NC1 | RQ | IP KWY.* | AH | S Dia. | OP KWY.* |
|---|---|---|---|---|---|---|---|---|---|---|---|---|---|---|---|
| TXQ3 | 180TC-180TC | 7.25 | 8.50 | 9.00 | .53 | 1.125 | 7.76 | .50 | 13.45 | .50 | 7.25 | .250 x .125 | 2.62 | 1.125 | .250 x .125 x 1.80 |
| | 210TC-180TC | 7.25 | 8.50 | 9.00 | .53 | 1.375 | 7.76 | .50 | 13.45 | .50 | 7.25 | 312 x .156 | 2.62 | 1.125 | .250 x .125 x 1.80 |
| | 250TC-180TC | 7.25 | 8.50 | 9.00 | .53 | 1.625 | 8.32 | .50 | 14.01 | .50 | 7.65 | .375 x .188 | 2.62 | 1.125 | .250 x .125 x 1.80 |
| TXM3 | 180TC-210TC | 7.25 | 8.50 | 9.00 | .53 | 1.125 | 7.76 | .50 | 13.45 | .50 | 7.25 | .250 x .125 | 3.12 | 1.375 | .312 x .156 x 2.63 |
| | 210TC-210TC | 7.25 | 8.50 | 9.00 | .53 | 1.375 | 7.76 | .50 | 13.45 | .50 | 7.25 | .312 x .156 | 3.12 | 1.375 | .312 x .156 x 2.63 |
| | 250TC-210TC | 7.25 | 8.50 | 9.00 | .53 | 1.625 | 8.32 | .50 | 14.01 | .50 | 7.65 | .375 x .188 | 3.12 | 1.375 | .312 x .156 x 2.63 |
| TX3 | 180TC-250TC | 7.25 | 8.50 | 9.00 | .53 | 1.125 | 7.76 | .50 | 13.45 | .50 | 7.25 | .250 x .125 | 3.75 | 1.625 | .375 x .188 x 3.00 |
| | 210TC-250TC | 7.25 | 8.50 | 9.00 | .53 | 1.375 | 7.76 | .50 | 13.45 | .50 | 7.25 | .312 x .156 | 3.75 | 1.625 | .375 x .188 x 3.00 |
| | 250TC-250TC | 7.25 | 8.50 | 9.00 | .53 | 1.625 | 8.32 | .50 | 14.01 | .50 | 7.65 | .375 x .188 | 3.75 | 1.625 | .375 x .188 x 3.00 |

** keyway width by depth*
***56C and 140TC available for input flange only. 180TC/210TC input flange shown.*

*Note: All dimensions are for reference only. Contact factory for certified dimensions.*

## Vent Plug Location

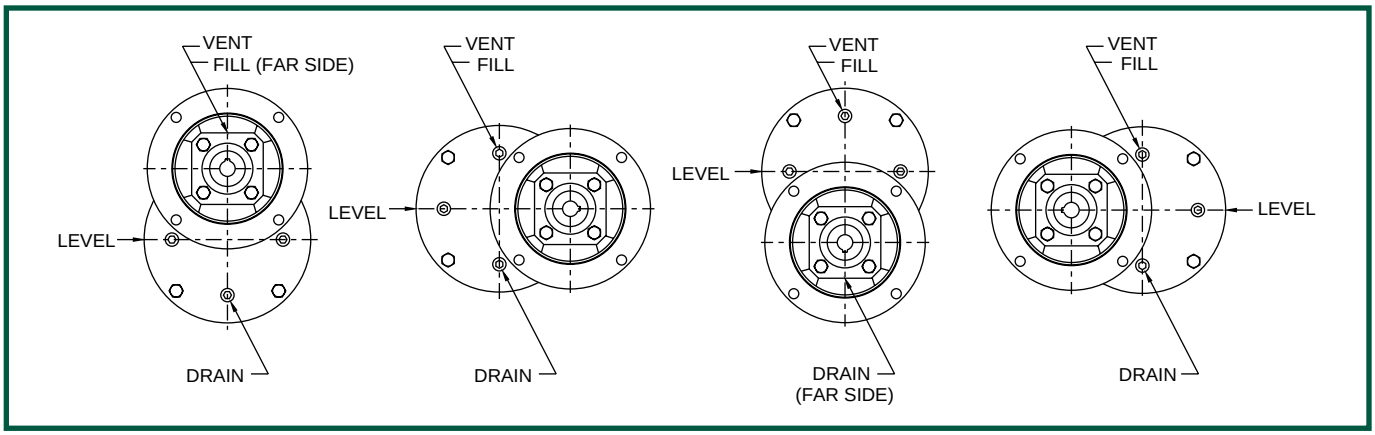


- Units are factory filled for input over mounting position. Verify proper oil level for other mountings.
- The *"input under"* mounting position is not recommended due to the increased probability of leakage from the high speed shaft seals.
- Special provisions are required for vertical shaft mountings. Consult factory for details.

CAUTION *For safety, purchaser or user should provide protective guards over shaft extensions and any couplings, sheaves and belts, sprockets and chains etc., mounted thereon.*

# Ratio Multiplier

## Dimensions

### Ratio Multiplier

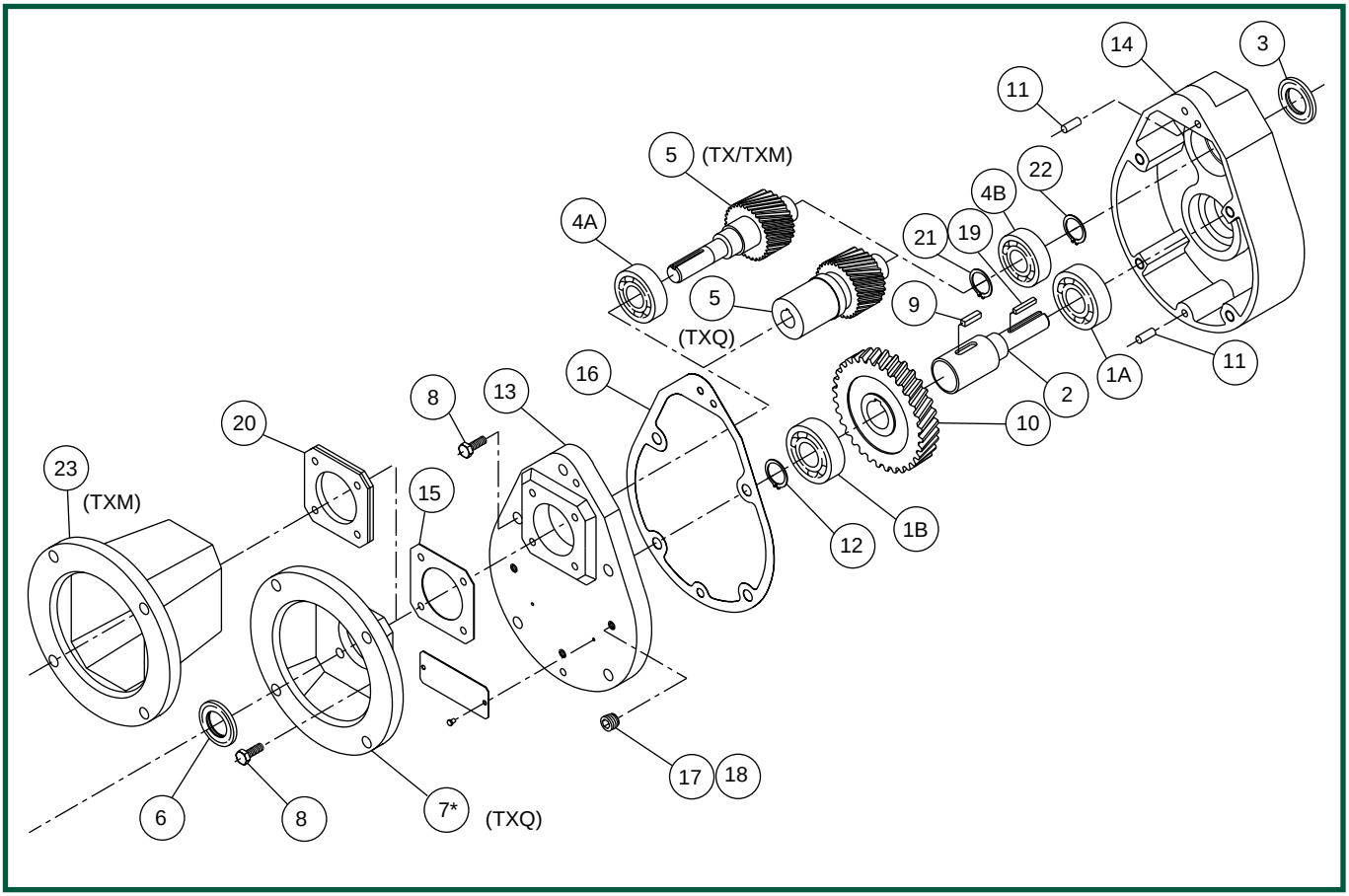


| Item # | Description |
|---|---|
| 1A. | Bearing, Output (Ball) — Extension End |
| 1B. | Bearing, Output (Ball) — Inboard End |
| 2. | Shaft, Output (state output frame size) |
| 3. | Seal, Oil (Output) |
| 4A. | Bearing, Input (Ball) — Extension End (N/A for TXQ) |
| 4B. | Bearing, Input (Ball) — Inboard End |
| 5. | Shaft, Input (state ratio); on TXQ also state frame size. |
| 6. | Seal, Oil (Input) |
| *7. | Flange, Motor (TXQ only) |
| 8. | Screw — 8 req. on Model I & II; 11 req. on Model III |
| 9. | Key, Gear |
| 10. | Gear, Output (state ratio) |

| Item # | Description |
|---|---|
| 11. | Pin, Dowel — 2 req. |
| 12. | Spacer, Low Speed — 2 req. |
| 13. | Cover, Housing |
| 14. | Housing, Gear |
| 15. | Gasket, Input Cover |
| 16. | Gasket, Housing |
| 17. | Plug, Pipe — 2 req. |
| 18. | Plug, Vent |
| 19. | Key, Output Shaft |
| 20. | Cover, Input, Seal Retainer |
| 21. | Ring, Retaining, Internal, Input Shaft |
| 22. | Ring, Retaining, External, Input Shaft |
| 23. | Flange, Motor (TXM only) |

**Note: Motor Flange replaces input cover on 'TXQ' Model.*

*Include the complete model description and serial number of the reducer when ordering replacement parts.*

# Terms & Conditions

## Grove Gear Industrial Gear Drives

**TERMS AND CONDITIONS OF SALES QUOTATIONS ARE MADE AND ORDERS ARE ACCEPTED BY SELLER SUBJECT ONLY TO THESE TERMS AND CONDITIONS:**

**1. AGREEMENT AND MODIFICATION OF SALES TERMS.** The agreement between Seller and Buyer ("Sales Contract") is with respect to the sale of goods described on the other side hereof (the "goods"). Any Terms and Conditions contained in any purchase order or other form of communication from Seller's customers which are additional to or different from these Terms and Conditions shall be deemed rejected by Seller unless expressly accepted in writing by Seller.

**2. ACCEPTANCE OF ORDERS.** Acceptance by Seller of Buyer's purchase order(s) is expressly conditioned upon Buyer's assent to these Terms and Conditions. Buyer will be deemed to have assented to such Terms and Conditions unless Seller receives written notice of any objections within 10 days after Buyer's receipt of this form or in all events prior to any delivery or other performance by Seller of Buyer's order if less than 10 days.

**3. QUOTATIONS.** Quotations by Seller shall be deemed to be offers by Seller to sell the goods described therein subject to these Terms and Conditions, and acceptance of such offers is expressly limited to acceptance by Buyer of all of these Terms and Conditions within 30 days from the date of the quotation or as specified. Purchase orders submitted by Buyer for the goods quoted by Seller shall be subject to and will be deemed to constitute acceptance of these Terms and Conditions. All purchase orders will be subject to approval by Seller.

**4. TERMINATION OR MODIFICATION.** The Sales Contract may be modified or terminated only upon Seller's express written consent, which consent will at all times be conditioned on Buyer's agreement to pay Seller's modification or termination charge including, but not limited to expenses and costs plus a reasonable profit, except that any goods completed on or before Seller's acceptance of termination shall be accepted and paid in full by Buyer.

**5. PRICES AND TERMS.** Fulfillment of Buyer's order is contingent upon the availability of materials. The price of the goods sold pursuant to the Sales Contract shall be based upon Seller's prices in effect at the time of shipment and any acceptance of the order will be on the basis of the freight rates now in effect. In the event of an increase or decrease in the applicable freight charges before the material is shipped, such changes in freight charges will be for the account of Buyer. Price advances, discounts, extras and terms and conditions are subject to changes without notice. Unless otherwise provided on the front side hereof, price is F.O.B. Seller's point of shipment, and terms of payment shall be net 30 days from date of invoice. Seller may assess a delinquency charge of 1-1/2 percent per month on invoices not paid within stated payment terms. Seller may require full or partial payment or payment guarantees in advance of shipment whenever, in its opinion, the financial condition of Buyer so warrants. In addition, Seller may, at any time, suspend performance of any order or require payment in cash, security or other adequate assurance satisfactory to Seller when, in Seller's opinion, the financial condition of Buyer warrants such action.

**6. TAXES.** Prices do not include sales, use or other similar federal, state or local taxes. Buyer shall pay to Seller, in addition to the price of the goods, all applicable taxes which may be invoiced separately at a later date.

**7. DESIGN; EXTRA WORK; BUYER'S MATERIAL.** (a) If any order accepted by Seller contemplates the preparation of special designs by Seller, Buyer issuing such order will have a responsible representative specifically approve all designs prepared by Seller.

(b) If Buyer requests extra work not included in the quotation or original order, Buyer will pay for the extra work at reasonable rates as determined by Seller.

(c) In the event spoilage/damage occurs on orders where Buyer furnishes the material, Seller shall not be liable for replacement of or damage to such material.

**8. RISK OF LOSS, TITLE, SECURITY INTEREST.** Delivery shall occur, and risk of loss shall pass to Buyer, upon delivery of the material to a carrier at the F.O.B. point of shipment. Transportation shall be at Buyer's sole risk and expense, and any claims for losses or damage in transit shall be against the carrier only. However, Seller retains title to all products until paid for in full in cash and Buyer agrees to perform all acts necessary to provide a fully perfected security interest in the goods in favor of Seller. Seller may, at Seller's option, repossess the same, upon Buyer's default in payment hereunder, and charge Buyer with any deficiency.

**9. DELIVERIES AND QUANTITIES.** (a) Delivery dates are not guaranteed but are estimated on the basis of immediate receipt by Seller of all information to be furnished by Buyer and the absence of delay, direct or indirect, resulting from or contributed to by circumstances beyond Seller's reasonable control. If the goods are non-catalog goods, Seller may ship overages or

# Terms & Conditions

## Grove Gear Industrial Gear Drives

underages to the extent of 10 percent of quantity ordered, and Buyer shall pay for such quantity based upon the unit price of the goods. Seller shall not be required to maintain closer control of quantity, unless specifically agreed to by Seller in writing. Quantities of all items may be determined by weight. Any claims for shortage must be within 10 days from the date of receipt of the goods by Buyer, and in every case the weights found in any particular shipment, including tare, must be given and Seller advised as to the method used by Buyer in computing the count of parts.

(b) In the event that Buyer is unable to accept delivery of the goods at time of shipment, Seller shall invoice Buyer for the full purchase price as if shipment had been made and: (i) if Seller is able to store such goods in its own facilities, Buyer will pay Seller the reasonable handling and storage charges for the period of such storage, and (ii) if Seller is unable to store such goods at its own facility, Seller reserves the right to arrange handling and storage in a suitable bonded warehouse for the Buyer at Buyer's expense. In cases where handling and storage become necessary, it shall be Buyer's responsibility to notify Seller when shipment is to be made. Seller will make necessary arrangements for shipment at Buyer's expense.

**10. RETURNED GOODS.** Goods may not be returned. However, if Seller consents in writing or upon verbal authorization to the return of goods for any reason, transportation charges must be prepaid by Buyer, who also shall assume all risk of loss of such returned goods until actual receipt by Seller.

**11. INSPECTION, ACCEPTANCE.** Buyer shall inspect the goods immediately upon the receipt thereof. All claims by Buyer (including claims for shortages), except only those provided for under the WARRANTY AND LIMITATIONS OF LIABILITY and PATENTS clauses below, must be asserted in writing by Buyer within a 10 day period or they are waived. If this contract involves partial performances, all such claims must be asserted within a 10 day period for each partial performance. Rejection may be only for defects substantially impairing the value of products or work. Buyer's remedy for lesser defects shall be those provided for under the Warranty and Liability clauses. THERE SHALL BE NO REVOCATION OF ACCEPTANCE. If Buyer wrongfully rejects, revokes or delays acceptance of items or work tendered under this contract, or fails to make a payment due on or before delivery, or repudiates this contract, Seller shall, at its option, have a right to recover as damages, either the price as stated herein (upon recovery of the price, the items involved shall become the property of the Buyer) or the profit (including reasonable overhead) which the Seller would make from performance together with incidental damages and reasonable cost.

**12. WARRANTIES AND LIMITATIONS OF LIABILITY.** (a) Seller warrants to Buyer that the goods will conform to the following warranty: The goods will be commercially free from defects in material and workmanship under normal use for a period of 1 year from the date of shipment of the goods by Seller and will conform at the date of shipment to applicable specifications, drawings and blueprints, except for departures therefrom with written approval of Buyer; provided that work performed by Seller upon blanks and other materials furnished by Buyer is excluded from this warranty. Seller shall have no liability to Buyer for cost of blanks furnished by Buyer which are damaged or spoiled during heat treat or machining operations;

(b) In the case of drives, gears and reducers manufactured by Seller, Seller warrants only that such products, when shipped, shall be capable of delivering the service rating as indicated in Seller's written documents, including quotations and catalogs or as noted on such products, providing such equipment is properly installed and maintained, correctly lubricated, operating under normal conditions with competent supervision, and within the load limits for which it was sold, and provided further that the equipment is free from critical speed, tortional or other type vibration, no matter how induced;

(c) If any model or sample was provided to the Buyer, it was used merely to illustrate the general type and quality of goods and not to warrant that goods shipped would be of that type or quality;

(d) UNLESS AUTHORIZED IN WRITING BY A CORPORATE OFFICER OR VICE PRESIDENT, NO AGENT, EMPLOYEE OR REPRESENTATIVE OF SELLER HAS ANY AUTHORITY TO BIND SELLER TO ANY AFFIRMATION, REPRESENTATION OR WARRANTY CONCERNING THE GOODS SOLD UNDER THE SALES CONTRACT AND ANY SUCH AFFIRMATION, REPRESENTATION OR WARRANTY HAS NOT FORMED A PART OF THE BASIS OF THE BARGAIN AND SHALL BE UNENFORCEABLE;

(e) Seller's sole obligation under the foregoing warranties is limited to either, at Seller's option, replacing or repairing defective goods (or defective parts thereof). This warranty does not cover the cost of installation of the new or repaired goods or parts. Replacement goods or parts are warranted for the remainder of the warranty period applicable to the goods originally supplied by Seller. All claims for allegedly defective goods must be made within 10 days after Buyer learns of such alleged

defects. All claims not made in writing and received by Seller within such 10 day period shall be deemed waived. Buyer shall return a sample of the alleged defective part for Seller's inspection, and no other goods shall be returned to Seller without Seller's written consent. This warranty shall not extend to goods subjected to misuse, abuse, neglect, accident or improper installation or maintenance, incorrect lubrication, or goods which have been altered or repaired by anyone other than Seller or its authorized representative;

(f) THE FOREGOING WARRANTIES ARE EXCLUSIVE AND IN LIEU OF ALL OTHER WARRANTIES OF MERCHANTABILITY, FITNESS FOR A PARTICULAR PURPOSE AND/OR ANY OTHER TYPE, WHETHER EXPRESS OR IMPLIED;

(g) Products manufactured and work not performed by Seller are warranted only to the extent and in the manner that the same are warranted to Seller by Seller's vendors, and then only to the extent that Seller is reasonably able to enforce such warranty. In enforcing such warranty, it is understood Seller shall have no obligation to initiate litigation unless Buyer undertakes to pay all costs and expenses therefor, including but not limited to Attorney's fees, and indemnifies Seller against any liability to Seller's vendors arising out of such litigation;

(h) THE FOREGOING IS SELLER'S ONLY OBLIGATION AND BUYER'S EXCLUSIVE REMEDY FOR BREACH OF WARRANTY. BUYER'S FAILURE TO SUBMIT A CLAIM AS PROVIDED ABOVE SHALL SPECIFICALLY WAIVE ALL CLAIMS FOR DAMAGES OR OTHER RELIEF INCLUDING BUT NOT LIMITED TO CLAIMS BASED ON LATENT DEFECTS. IN NO EVENT SHALL BUYER BE ENTITLED TO INCIDENTAL, CONSEQUENTIAL, CONTINGENT, OR SPECIAL DAMAGES, NOR SHALL SELLER'S LIABILITY EXCEED THE PURCHASE PRICE OF THE GOODS. EVEN IF THE REPAIR OR REPLACEMENT REMEDY SHALL BE DEEMED TO HAVE FAILED OF ITS ESSENTIAL PURPOSE UNDER SECTION 2-719 OF THE UNIFORM COMMERCIAL CODE, SELLER SHALL HAVE NO LIABILITY TO BUYER FOR CONSEQUENTIAL OR INCIDENTAL DAMAGES, SUCH AS LOST PROFITS, LOST REVENUE, DAMAGE TO OTHER EQUIPMENT OR LIABILITY OR INJURY TO A THIRD PARTY. ANY ACTION ARISING HEREUNDER OR RELATED HERETO MUST BE COMMENCED WITHIN ONE (1) YEAR AFTER THE CAUSE OF ACTION OCCURS OR IT SHALL BE BARRED, NOTWITHSTANDING ANY STATUTORY PERIOD OF LIMITATIONS TO THE CONTRARY; and

(i) In the event of the resale of any of the goods, in whatever form, Buyer will include the following language in a conspicuous place and in a conspicuous manner in a written agreement covering such resale: "THE MANUFACTURER MAKES NO WARRANTIES OR REPRESENTATIONS, EXPRESS OR IMPLIED, BY OPERATION OF LAW OR OTHERWISE, AS TO THE MERCHANTABILITY OR FITNESS FOR A PARTICULAR PURPOSE OF THE GOODS SOLD HEREUNDER. BUYER ACKNOWLEDGES THAT IT ALONE HAS DETERMINED THAT THE GOODS PURCHASED HEREUNDER WILL SUITABLY MEET THE REQUIREMENTS OF THEIR INTENDED USE. IN NO EVENT WILL MANUFACTURER BE LIABLE FOR CONSEQUENTIAL, INCIDENTAL OR OTHER DAMAGES."

**13. REMEDIES AND LIMITATIONS OF LIABILITY.** In the event Buyer claims Seller has breached any of its obligations under the Sales Contract, whether of warranty or otherwise, Seller may request the return of goods and tender to Buyer, at Seller's option, a replacement shipment of goods. If Seller so requests the return of the goods, the goods will be redelivered to Seller in accordance with Seller's instructions and at Buyer's expense. Except as herein provided, Seller shall have no further obligation under the Sales Contract. The remedies contained in this paragraph and paragraph 12 hereof shall constitute the sole recourse of Buyer against Seller for breach of any of Seller's obligations under the Sales Contract, whether warranty or otherwise.

**14. TECHNICAL ADVICE.** Any technical advice furnished or recommendation made by Seller or any representative of Seller concerning any use or application of any of the goods is believed to be reliable, but SELLER MAKES NO WARRANTY, EXPRESSED OR IMPLIED, ON RESULTS TO BE OBTAINED. BUYER ASSUMES ALL RESPONSIBILITY FOR LOSS OR DAMAGE RESULTING FROM THE HANDLING OR USE OF ANY OF THE GOODS.

**15. FORCE MAJEURE.** Seller shall not be liable for failure to perform its obligations under the Sales Contract in whole or in part caused by the occurrence of any contingencies beyond the reasonable control either of Seller or of suppliers of Seller. If any such contingency occurs, Seller may allocate goods and deliveries among Seller's customers.

**16. ASSIGNMENT AND DELEGATION.** No right or interest in the Sales Contract shall be assigned by Buyer without Seller's prior written consent, and no delegation of any obligation owed, or to the performance of any obligation by Buyer shall be made without Seller's prior written consent. Any attempt at assignment or delegation shall be wholly void and totally ineffective for all purposes unless made in conformity with this paragraph.

**17. PATTERNS AND TOOLING.** Unless otherwise agreed to in writing with Buyer, Seller shall retain title to and possession of all special tooling, patterns and dies

# Terms & Conditions

## Grove Gear Industrial Gear Drives

whether paid for by Buyer or not, but such special tooling, patterns and dies that are specifically paid for by Buyer will be held by Seller exclusively for the manufacture of Buyer's goods for not more than 2 years after the date of Buyer's last order requiring their use. Seller will exercise reasonable care in handling and storing any tooling, patterns or dies specifically paid for by Buyer, but Seller shall not be liable for damage or loss thereof.

**18. PATENTS.** SELLER MAKES NO REPRESENTATION OR WARRANTY WITH RESPECT TO THE PATENTABILITY OF THE GOODS OR THAT ANY OF THE GOODS WILL BE FREE FROM CLAIMS OF INFRINGEMENT. Buyer agrees to indemnify and defend Seller in any such suit, action or proceeding for any claim resulting from actual or alleged infringement of any domestic or foreign letters patent for (i) any feature, construction or design incorporated at Buyer's request in any goods or to adapt such goods to the particular use of Buyer or Buyer's customers or (ii) any additions, changes or adaptations made by Buyer or Buyer's customers after delivery of the goods.

**19. CONFIDENTIAL INFORMATION.** All drawings, diagrams, specifications, technical data and other materials furnished by Seller and identified by Seller as confidential are and shall remain the exclusive property of Seller and shall be returned to Seller upon request. Buyer agrees to treat such information and material as confidential and not to reproduce or disclose such information or materials without Seller's prior written consent. This paragraph does not apply to any information already known to and readily accessible in the trade or which may become so through no fault of Buyer.

**20. CHANGES.** Seller may, at any time, without notice, make changes (whether in design, material, improvements or otherwise) in any catalog goods, and may discontinue the manufacture of any catalog goods, all in its sole discretion, without incurring any obligations of any kind as a result thereof, whether for failure to fill an order of Buyer or otherwise.

**21. INSTALLATION.** Installation of the goods shall be by Buyer unless otherwise specifically stated in the Sales Contract.

**22. SEVERABILITY.** If any term or provision contained in the Sales Contract is declared or held invalid by a court of competent jurisdiction, such declaration or holding shall not affect the validity of any other term, clause or provision contained herein.

**23. GOVERNING LAW AND LIMITATION.** (a) The formation and performance of the Sales Contract shall be deemed to have been made and governed by the Uniform Commercial Code as adopted in the state of Seller's principal place of business;

(b) Buyer hereby agrees to the jurisdiction of any state or federal court located in the county of Seller's principal place of business. Buyer waives any objection based on forum non conveniens and any objection to venue of any action instituted hereunder, and consents to the granting of such legal or equitable relief as is deemed appropriate by a court of competent jurisdiction; and

(c) Seller represents that the goods will be produced in compliance with the Fair Labor Standards Act of 1938, as amended.

Revised August 2001

# Important Information

## Warnings / Cautions for Gear Drives

WARNING **Please Read Carefully** CAUTION

***The following WARNING and CAUTION information is supplied to you for your protection and to provide you with many years of trouble free and safe operation of your Grove Gear product.***

Read **ALL** instructions prior to operating reducer. Injury to personnel or reducer failure may be caused by improper installation, maintenance or operation.

WARNING

- Written authorization from Grove Gear is required to operate or use reducers in man lift or people moving devices.
- Check to make certain application does not exceed the allowable load capacities published in the current catalog.
- Buyer shall be solely responsible for determining the adequacy of the product for any and all uses to which Buyer shall apply the product. The application by Buyer shall not be subject to any implied warranty of fitness for a particular purpose.
- For safety, Buyer or User should provide protective guards over all shaft extensions and any moving apparatus mounted thereon. The User is responsible for checking all applicable safety codes in his area and providing suitable guards. Failure to do so may result in bodily injury and/or damage to equipment.
- Hot oil and reducers can cause severe burns. Use extreme care when removing lubrication plugs and vents.
- Make certain that the power supply is disconnected before attempting to service or remove any components. Lock out the power supply and tag it to prevent unexpected application of power.
- Reducers are not to be considered fail safe or self-locking devices. If these features are required, a properly sized, independent holding device should be utilized. Reducers should not be used as a brake.
- Any brakes that are used in conjunction with a reducer must be sized or positioned in such a way so as to not subject the reducer to loads beyond the catalog rating.
- Lifting supports including eyebolts are to be used for vertically lifting the gearbox only and no other associated attachments or motors.
- Use of an oil with an EP additive on units with backstops may prevent proper operation of the backstop. Injury to personnel, damage to the reducer or other equipment may result.
- Overhung loads subject shaft bearings and shafts to stress which may cause premature bearing failure and/or shaft breakage from bending fatigue, if not sized properly.

CAUTION

- Test run unit to verify operation. If the unit tested is a prototype, that unit must be of current production.
- If the speed reducer cannot be located in a clear and dry area with access to adequate cooling air supply, then precautions must be taken to avoid the ingestion of contaminants such as water and the reduction in cooling ability due to exterior contaminants.
- Mounting bolts should be routinely checked to ensure that the unit is firmly anchored for proper operation.

In the event of the resale of any of the goods, in whatever form, Resellers/Buyers will include the following language in a conspicuous place and in a conspicuous manner in a written agreement covering such sale:

> The manufacturer makes no warranties or representations, express or implied, by operation of law or otherwise, as to the merchantability or fitness for a particular purpose of the goods sold hereunder. Buyer acknowledges that it alone has determined that the goods purchased hereunder will suitably meet the requirements of their intended use. In no event will the manufacturer be liable for consequential, incidental or other damages. Even if the repair or replacement remedy shall be deemed to have failed of its essential purpose under Section 2-719 of the Uniform Commercial Code, the manufacturer shall have no liability to Buyer for consequential damages.

Resellers/Buyers agree to also include this entire document including the warnings and cautions above in a conspicuous place and in a conspicuous manner in writing to instruct users on the safe usage of the product.

This information should be read together with all other printed information supplied by Grove Gear.

# Important Information

## Warnings / Cautions for Motors

WARNING **Please Read Carefully** CAUTION

This catalog is not intended to provide operational instructions. Appropriate Grove Gear instructions provided with the motor and precautions attached to the motor should be read carefully prior to installation, operation and/or maintenance of the equipment. Injury to personnel or motor failure may be caused by improper installation, maintenance or operation.

***The following WARNING and CAUTION information is supplied to you for your protection and to provide you with many years of trouble free and safe operation of your Grove Gear product:***

WARNING

- Disconnect power and lock out driven equipment before working on a motor.
- Always keep hands and clothing away from moving parts.
- The lifting support on the motor is not to be used to lift the entire machine. Only the motor attached directly to the support may be safely lifted by the support.
- Install and ground per local and national codes.
- Discharge all capacitors before servicing a single phase motor.
- Misapplication of a motor in a hazardous environment can cause fire or an explosion and result in serious injury. Only the end user, local authority having jurisdiction, and/or insurance underwriter are qualified to identify the appropriate class(es), group(s), division and temperature code. Grove Gear personnel can not evaluate or recommend what motors may be suitable for use in hazardous environments. If a motor is name-plated for hazardous locations, do not operate the motor without all of the grease and drain plugs installed.
- Never attempt to measure the temperature rise of a motor by touch. Temperature rise must be measured by thermometer, resistance, imbedded detector or thermocouple.
- Motors with automatic reset thermal protectors will automatically restart when the protector temperature drops sufficiently. Do not use motors with automatic reset thermal protectors in applications where automatic restart will be hazardous to personnel or equipment.
- Motors with manual reset thermal protectors may start unexpectedly after the protector trips when the surrounding air is at +20°Fahrenheit or lower. If the manual reset protector trips, disconnect motor from its power supply. After the protector cools (five minutes or more), it can be reset and power may be applied to the motor.
- Connect all protective device leads, marked P1, P2, etc., per instructions supplied with the motor.
- Operation of a motor at other than its nameplate rating may result in fire, damage to equipment or serious injury to personnel.

CAUTION

- For safety, Buyer or User should provide protective guards over all shaft extensions and any moving apparatus mounted thereon. The User is responsible for checking all applicable safety codes in his area and providing suitable guards. Failure to do so may result in bodily injury and/or damage to equipment.
- Consult qualified personnel with questions and all electrical repairs must be performed by trained and qualified personnel only.
- For motors nameplated as “belted duty only”, do not operate the motor without belts properly installed.
- Motors and/or driven equipment should not be operated faster than their rated speed.
- For inverter applications, follow the inverter manufacturer’s installation guidelines.
- Make sure the motor is properly secured and aligned before operation.

### Resale of Goods

In the event of the resale of any of the goods, in whatever form, Resellers/Buyers will include the following language in a conspicuous place and in a conspicuous manner in a written agreement covering such sale:

> The manufacturer makes no warranty or representations, express or implied, by operation of law or otherwise, as to the merchantability or fitness for a particular purpose of the goods sold hereunder. Buyer acknowledges that it alone has determined that the goods purchased hereunder will suitably meet the requirements of their intended use. In no event will the manufacturer be liable for consequential, incidental or other damages. Even if the repair or replacement remedy shall be deemed to have failed of its essential purpose under Section 2-719 of the Uniform Commercial Code, the manufacturer shall have no liability to Buyer for consequential damages.

Resellers/Buyers agree to also include this entire document including the warnings and cautions above in a conspicuous place and in a conspicuous manner in writing to instruct users on the safe usage of the product.

This information should be read together with all other printed information supplied by Grove Gear.